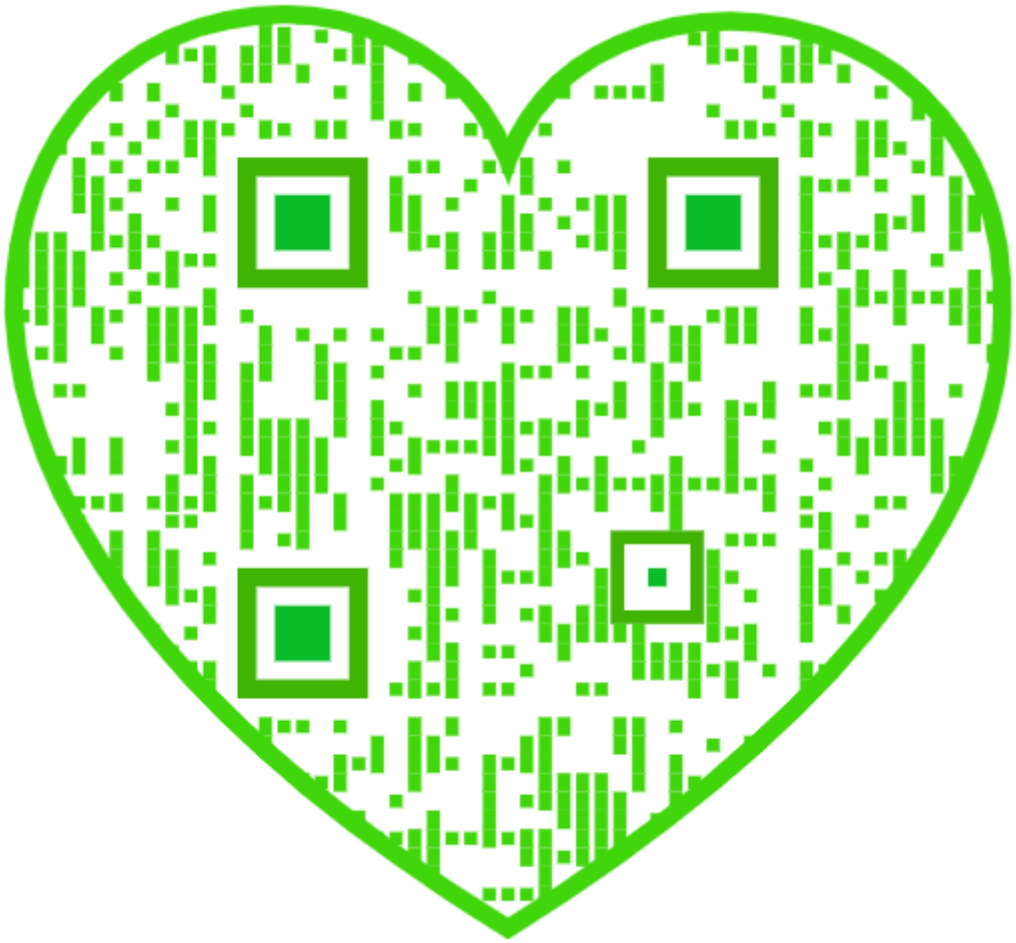

MACHINE-SHOP TOOLS AND METHODS

BY

W. S. LEONARD

Formerly Instructor in Machine-shop Practice and in Practical Machine Design
Michigan Agricultural College

With over 700 Illustrations

FIFTH EDITION, REVISED AND ENLARGED

FIRST THOUSAND

NEW YORK
JOHN WILEY & SONS
LONDON: CHAPMAN & HALL, LIMITED
1908

NEW YORK PUBLIC LIBRARY

THE NEW YORK
PUBLIC LIBRARY
879646A
ASTOR, LENOX AND
TILDEN FOUNDATIONS
R 1907 L

Copyright, 1905, 1906, 1908,
BY
W. S. LEONARD.

The Scientific Press
Robert Drummond and Company
New York

PREFACE

"THE printed matter here presented is designed to serve as an aid in connection with the lectures on machine-shop methods given in the Mechanical Department at the Michigan Agricultural College. There are many questions connected with machine-shop practice which can be more systematically and economically treated in the class-room than by giving individual instruction in the shop. Some of these questions will be treated in these notes, and they will be further discussed and elaborated before the class. The expressions *exhibited* and *blackboard sketch*, used in the side-headings, mean that the apparatus to which the text refers is shown before the class or illustrated on the blackboard. At the discretion of the instructor the student will be required to sketch the apparatus exhibited; however, the work is largely illustrated by detached blue-print sketches and printed plates, to which the text refers by number. Additional matter will be given in the class-room, and it is intended that the examinations shall, as far as practicable, cover the whole subject."

The foregoing brief introduction, which was printed in the two preceding loose-leaf editions of this work, is reproduced here to indicate the circumstances under which the work has been developed and its primary object. In its original form the book served its purpose well at the college mentioned above, and the enlarged edition is presented with the hope that it may be equally valuable in connection with the engineering departments of other schools.

In the foot-notes there are a few references to articles in such technical journals as are likely to be found in college libraries. It may be advantageous, in connection with a course of lectures, to require some of the students to read these or other similar articles and report their findings to the class for discussion. Such variations from a fixed method serve to keep up the interest of the student and at the same time tend to broaden his views. In institutions which have no regular course of lectures on shop-practice, the book may prove of value for reference in connection with machine-shop instruction.

In some of the larger shops of this country there has recently been introduced a system which requires that the workman shall follow a carefully prepared order of operations in his work. As suggestive of what may be done in this direction, the instructions for some of the exercises in Chapters XVII and XVIII are presented in this regular order.

The list of questions at the end of the book is not a complete outline of the contents, but it may be supplemented by additional questions at the discretion of the instructor. Such an outline is of value to the student in preparing for examinations.

It is hoped that a considerable portion of the book may be found profitable reading for experienced machinists. This class of readers, bearing in mind that many of the students for whom the work is principally designed know practically nothing of machine-shop practice, will overlook the elementary character of much of the text.

Among the publications consulted in the preparation of the manuscript may be mentioned "Modern Machine-shop Practice," by Joshua Rose; "Modern Machine-shop Tools," by Vandervoort; and "Practical Treatise on Gearing," and other publications by The Brown and Sharpe Manufacturing Company. Frequent reference was also made to the files of "The American Machinist" and "Machinery."

A considerable number of the cuts which illustrate the text were made expressly for this work; many others were loaned by manufacturers. Grateful acknowledgment is here made to the friends who have thus assisted us. It is due to the manufacturers to explain that the cuts used do not in every instance represent their best work. In a few cases the simpler machines were chosen in preference to the more elaborate designs, in order to illustrate a principle more clearly. Acknowledgments are due also to the publishers of the "American Machinist," who very kindly presented a number of valuable electrotypes. During the preparation of the manuscript the author was afflicted with a serious and persistent eye strain. Sincere thanks are tendered Mr. C. E. Johnson, of the class of 1905, who in this emergency rendered valuable assistance in connection with the drawings.

AGRICULTURAL COLLEGE, MICHIGAN. W. S. L.

PREFACE TO FOURTH EDITION

In this edition a few corrections and changes of minor importance have been made, and a chapter on "Laying Out Work" has been added.

W. S. L.

AGRICULTURAL COLLEGE, MICHIGAN, December, 1905.

PREFACE TO FIFTH EDITION

Considerable new matter has been added to the chapter on "Grinding Machines and Methods" in this edition, and a few minor changes have been made elsewhere in the work.

Suggestions and criticisms which may lead to improvement in the work will be appreciated by the author.

W. S. LEONARD.

EDGEWOOD, GA., February, 1908.

THE NEW YORK PUBLIC LIBRARY
ASTOR, LENOX AND TILDEN FOUNDATIONS

CONTENTS

CHAPTER I

THE MEASURING SYSTEM OF THE MACHINE-SHOP. STANDARDS OF LENGTH. PAGES 1–29

CHAPTER II

THE HAMMER AND ITS USE. 30–36

CHAPTER III

CHISELS: THEIR FORMS AND USES. 37–43

CHAPTER IV

FILES AND FILING. 44–59

CHAPTER V

THE SURFACE-PLATE AND SCRAPER. 60–67

CHAPTER VI

THE VISE AND SOME VISE ACCESSORIES. 68–73

CHAPTER VII

DRILLING-MACHINES. 74–111

CHAPTER VIII

DRILLS AND DRILLING. 112–124

CHAPTER IX

DRILL-SOCKETS, DRILL-CHUCKS, AND ACCESSORIES. 125–131

CHAPTER X

PAGES

CONSTRUCTION AND USE OF REAMERS AND BITS. 132–144

CHAPTER XI

LATHES. 145–177

CHAPTER XII

TURRET-MACHINES AND TURRET-MACHINE WORK. 178–207

CHAPTER XIII

LATHE- AND PLANER-TOOLS. 208–223

CHAPTER XIV

LATHE-CENTERS, WORK-CENTERS, ETC. 224–232

CHAPTER XV

METHODS OF DRIVING WORK IN THE LATHE. DOGS AND CHUCKS. 233–245

CHAPTER XVI

LATHE-ARBORS, OR MANDRELS, AND ARBOR-PRESSES. 246–253

CHAPTER XVII

SOME EXAMPLES OF ENGINE-LATHE WORK. 254–277

CHAPTER XVIII

THREAD-CUTTING IN THE ENGINE-LATHE. 278–293

CHAPTER XIX

SCREW-THREADS, TAPS, AND DIES. BOLT- AND NUT-THREADING MACHINES. 294–313

CHAPTER XX

THE BORING-BAR AND ITS USE. 314–327

CHAPTER XXI

HORIZONTAL BORING- AND DRILLING-MACHINES AND WORK. CRANK-BORING MACHINE. 328–341

CHAPTER XXII

VERTICAL BORING- AND TURNING-MILLS, TOOLS AND WORK. 342–355

CHAPTER XXIII

PAGES

PLANERS AND SHAPERS AND PLANER AND SHAPER WORK..... 356–387

CHAPTER XXIV

SLOTTING-MACHINES AND THE WORK TO WHICH THEY ARE ADAPTED... 388–393

CHAPTER XXV

KEY-SEATING MACHINES AND KEYS..... 394–396

CHAPTER XXVI

MILLING-MACHINES AND MILLING-MACHINE WORK..... 397–454

CHAPTER XXVII

SPECIAL GEAR-MACHINES..... 455–466

CHAPTER XXVIII

GRINDING-MACHINES AND METHODS..... 467–496

CHAPTER XXIX

POLISHING- AND BUFFING-WHEELS..... 497–500

CHAPTER XXX

THE INTERCHANGEABLE SYSTEM OF MANUFACTURING..... 501–510

CHAPTER XXXI

LAYING OUT WORK. SPECIAL METHODS OF LOCATING HOLES..... 511–520

CHAPTER XXXII

MISCELLANEOUS MACHINE SHOP METHODS..... 521–527

CHAPTER XXXIII

TABLES, RECIPES, ETC..... 528–535

APPENDIX

QUESTIONS ON THE TEXT..... 537–550

INDEX..... 551–571

MACHINE-SHOP TOOLS AND METHODS

CHAPTER I

THE MEASURING SYSTEM OF THE MACHINE-SHOP—STANDARDS OF LENGTH

The British Yard.—A vast deal of time and energy have been expended by the nations of civilization in an endeavor to arrive at scientific standards of money. The agitations of this question in the United States at various times, and especially during the closing years of the nineteenth century, indicate the importance with which the subject is viewed in this country. Of scarcely less importance is a standard of length in the mechanical world; and much labor and research have been directed towards establishing standards of length upon scientific bases. The final outcome of these efforts, so far as the English-speaking peoples are concerned, was the British Imperial yard. The yard became the unit of length in England by legal enactment in 1824, but the metallic representation of this unit was destroyed by fire in 1834. Later a more accurate standard was made, and to provide against its being lost a number of duplicates were made and deposited with other countries. This later standard was recognized by an Act of Parliament in 1855, and a copy of it was presented to the United States in 1856.

This "yardstick" is made of "Bailey's metal," a composition chosen after much experimentation. The bar is 38″ long by 1″ square, and lines 36″ apart are marked upon gold studs sunk to its neutral axis. The studs are thus placed as a provision against flexure. To further provide against errors from this cause the positions of supporting the bar had been determined by elaborate calculations before the lines were drawn. As all metals change in dimensions with variations in temperature, the British yard was established as standard at a temperature of 62° F.

After having been made with the greatest precision possible the "yardstick" presented to the United States was found to be .000088" short at 62° F. This, however, did not necessitate any alteration in the bar, but merely suggested changing the temperature of the room in which it was kept. At 62.25° the bar is so nearly a duplicate of the original that no difference can be discovered with the most costly and elaborate instruments.

The French Standard.—In their efforts to discover some natural standard the French settled upon the ten-millionth part of a quadrant of the earth through Paris. This unit they called the metre and it is equivalent to 39.37 English inches. To be independent of any instrument for gaging the temperature the French made the metre standard at the temperature of melting ice, or 32° F. While the English system predominates in America, the metric system is used to a considerable extent, and it is generally preferred in scientific investigations.*

The manufacturers of the measuring instruments sold to the public use as their guides duplicates of the authorized standard. The making of these duplicates, as well as the production of the original, involves very great refinements. For instance, the temperature of the metallic bar being lower than that of the human body, special precautions have to be taken when comparisons are made with duplicate standards. Otherwise the heat of the body would expand the yardstick.

The high degree of refinement referred to above is, of course, *unnecessary in average shop work*, and is commercially impossible in all but exceptional cases. Nevertheless the degree of accuracy required in everyday practice is such as to justify the great expense of establishing and maintaining an invariable standard. The necessity for this invariable standard may be illustrated as follows: Suppose John Jones in Chicago sends to Brown in New York for a gear to fit a 2" shaft. Now two inches in New York must agree within about .001" with two inches in Chicago or the gear will not fit. Both must be $^1/_{18}$ of the standard yard, and both Jones and Brown must have means for determining the two inches with practical accuracy. In this connection we shall describe in detail the measuring-instruments of the machine-shop.

* In 1893 the standard yardstick was superseded in the National Bureau of Standards by the National Prototype Metre, Congress having in 1866 legalized the metric system and defined the yard as $^{3600}/_{3937}$ metre However, this action is not likely to change the prevailing usage of the people

A very interesting account of the National Prototype Meter is published by The National Bureau of Standards.

Rules, Wood and Steel.—The common boxwood rule is familiar to all, but in the machine-shop this rule is used for only very general and rough measurements, the steel rule or scale being used for finer work. The boxwood rule is less accurate than the steel rule partly because it is made with joints subject to wear, and also for reasons of minor importance. The steel rule is made without any joint, and, while subject to some variation due to temperature changes, the material measured is affected in very nearly the same ratio, and when made by a reliable manufacturer the steel rule is a fairly accurate tool. It requires some skill, however, to measure to, say, within .002″ by a rule of any kind, and, as above indicated, the fit of many machine details is required to be well within this limit. But for ordinary measurements, where the parts are not required to fit as a gear should fit its shaft, the steel rule is satisfactory. These rules are made in various graduations, widths, lengths, and shapes. Fig. 1 shows a common form. Figs. 2 and 3

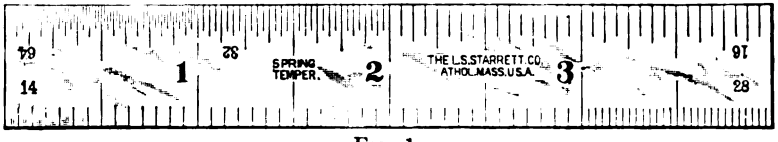

FIG. 1.

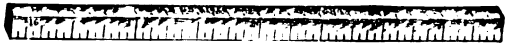

FIG. 2.

FIG. 3.

show respectively a square rule and a triangular rule. The hook rule shown in Fig. 4 is a very convenient tool. In setting inside calipers by it one point of the caliper is held against the hook, while the other point is adjusted to the required dimension. This rule is advantageous, also, in measuring the distance from a recess in the hub of a pulley, for instance, to the end of the hub, and in many other ways. The hook may be detached from the rule by turning the eccentric screw one-half revolution.

Common Machinists' Calipers.—In fitting one piece to another, and also for transferring dimensions from the steel rule, common calipers

are frequently used. They are made in two leading designs, friction-joint and spring-joint. These again have various modifications, but the modifications are not of sufficient importance to justify a detailed description within the scope of this work. Fig. 5 shows an outside spring-joint caliper. It is used generally for outside dimensions, and especially for calipering the diameters of cylinders. Fig. 6 is an inside

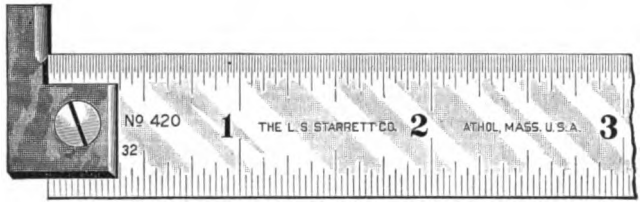

FIG. 4.

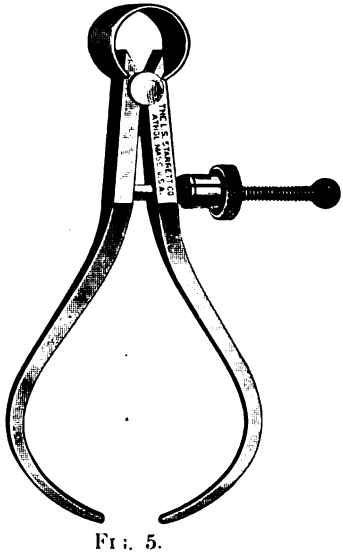

FIG. 5.

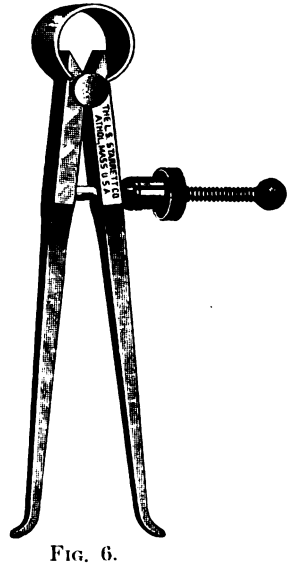

FIG. 6.

caliper of the same design as Fig. 5. Its principal use is that of calipering internal diameters, but it may also be used for rectangular and other shaped openings. These calipers are often made with "solid" nuts, but the designs here shown have spring-nuts. Slight pressure on the knurled end of the nut causes disengagement of the thread in the nut, when it may be quickly moved along the screw, allowing the caliper to open or close in an instant.

The calipers shown in Figs. 7 and 8 are good examples of the friction or firm-joint pattern. Spring-joint calipers are adjusted by screw and nut, but the old style firm-joint calipers are adjusted by repeated light taps of the caliper limb against some convenient object—preferably a block of wood. This may appear to be a very awkward method; nevertheless some good mechanics prefer these calipers to the spring-joint design.

The instrument shown in Fig. 9 is known as a double caliper. In reality it combines in one tool an inside caliper, an hermaphrodite, and

FIG. 7.

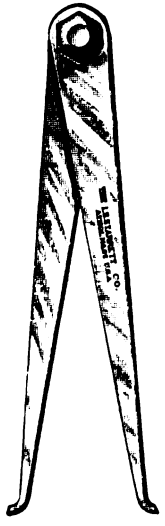

FIG. 8.

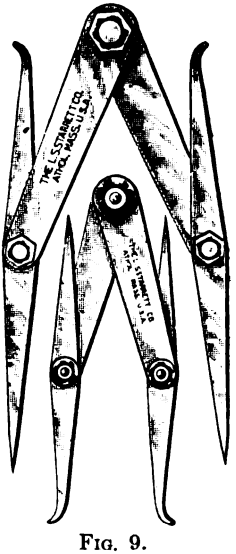

FIG. 9.

dividers. The double joints admit of the caliper being used with advantage in boring-bar work. By adjusting the joints so as to bring the legs parallel the points of the caliper will enter a narrow space between a boring-bar and hole which could not be reached by the single-joint caliper. This will often save the trouble of taking the boring-bar out to caliper the hole.

Universal Dividers.—A very unique and handy tool is illustrated in Figs. 10 and 11. The manufacturers call this instrument "universal dividers." By inclining the adjustable point inward as shown, very small circles may be drawn. When reversed the point will work closer to shoulders, and draw larger circles than is possible with other dividers of this character which have straight points. Any one of the points

B, *C*, *D*, or *V* may be inserted in place of either of the points shown in the instrument. *B* is a needle-point, *C* a pen-point attachment, *D* an extra straight point and socket, and *V* a center point designed as a guide when drawing circles concentric with a reamed center in the end of a shaft. A pencil-point may also be used in one of the sockets. An

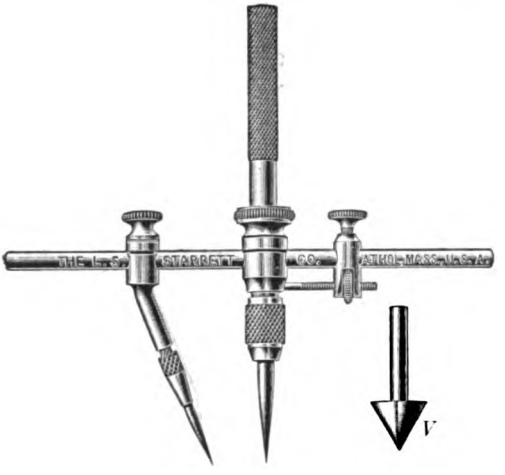

Fig. 10.

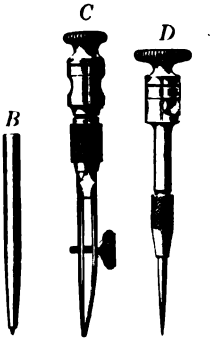

Fig. 11.

auxiliary beam long enough for drawing 25″ circles is furnished with the instrument.

Hermaphrodite Caliper.—The tool shown in Fig. 12 is commonly known as the hermaphrodite caliper—a very awkward name. In spite of its name this is quite a useful instrument. It is used in the same way that a carpenter uses a marking-gage when drawing lines parallel with the edges of rectangular objects. It can be used also to draw concentric arcs on the end of a cylinder or circular disk. In drawing these arcs the legs of the caliper should be held in radial lines, the caliper-point being pressed against and moved around the periphery of the circle.

A Scratch-gage somewhat similar to the carpenter's marking-gage is shown in connection with Fig. 687.

Thread-calipers.—The calipers shown in Figs. 13, 14 and 15 are called respectively thread-calipers, outside-thread calipers, and inside-thread calipers. The points of Fig. 13 are made quite broad to give a more reliable contact on V and U. S. standard threads. In order to measure the small diameter at the root of a screw-thread the points of Fig. 14 are made thin. Fig. 15 is designed to measure the greater diameter of internal thread. A screw-thread is more difficult to measure accu-

FIG. 12.

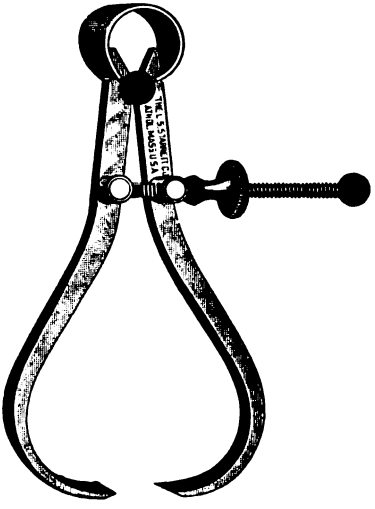

FIG. 13.

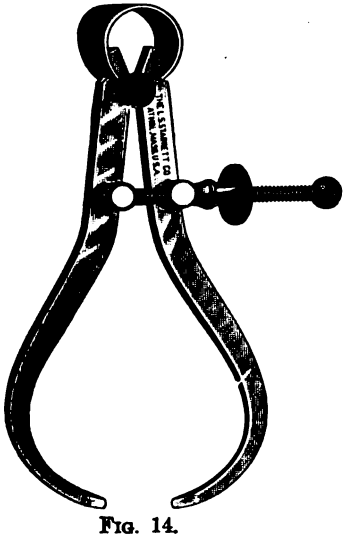

FIG. 14.

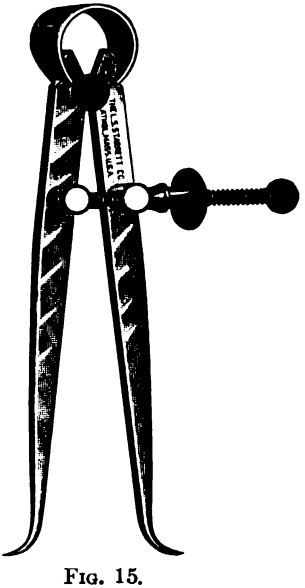

FIG. 15.

rately than a plain cylinder, and these tools are not reliable for close-fitting screws. They answer well enough for approximate measurements, but one of the tools mentioned later should be used for more exacting requirements. Otherwise the screw itself applied directly in the threaded hole must be the final test.

Setting Calipers.—To make an accurate measurement with the inside caliper, hold one leg against the inside of the hole and adjust and vibrate the other leg until its point *just touches* the part of the hole *diametrically opposite.* To transfer the measurement from the inside caliper to the outside, place the *extreme point* of one leg of the outside caliper in contact with the similar point of the inside caliper, and vibrate and adjust the other leg of the outside caliper until its *extreme point just touches* the other *extreme point* of the inside caliper. *Great care* must be taken to find these extreme points, and the caliper must not be forced over in the *least degree.* Forcing the caliper over another caliper, or over a shaft, will cause it to register falsely and lead to misfits.

The Vernier Caliper.—The Vernier caliper is a measuring-instrument much used in tool-making and other fine work. It takes its name from Pierre Vernier, who invented the method of graduating which admits of reading by the unaided eye dimensions which could not thus be read from a common rule. The instrument is based on the principle that the eye can discover when two lines are coincident, but cannot determine their distance apart when they are not coincident. Fig. 16 shows a small pocket Vernier caliper. It is designed

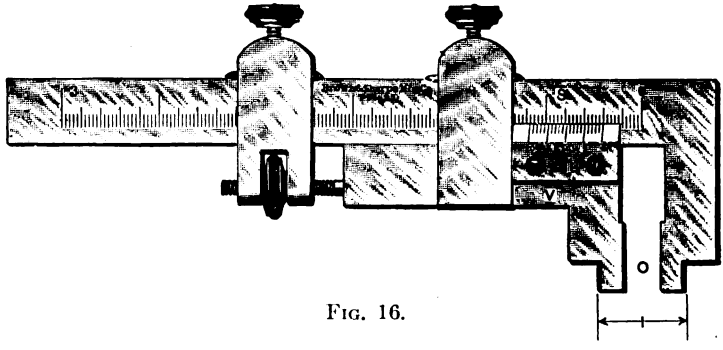

FIG. 16.

for both outside and inside measurements, the outside measurements being taken between the jaws at *O*, and the inside over the jaws at *I*.

There are two leading systems of graduation used on machine-

shop Vernier calipers. The scale S of the caliper shown in the figure is divided into $^1/_{50}''$, $^1/_{10}''$, $^1/_2''$, etc., the smallest divisions being equal to .020″. Twenty divisions on the vernier V equal nineteen of the smallest divisions on the scale. The difference between a division on the vernier and one on the scale (smallest divisions being meant in both cases) is, therefore, for this instrument $^1/_{20} \times ^1/_{50}$ (or .05×.02) = .001″. On the other caliper the smallest scale divisions equal .025″ or $^1/_{40}''$, and twenty-five divisions on the vernier equal twenty-four on the scale, the difference being $^1/_{25} \times ^1/_{40}$ (or .04×.025) = .001. Then starting at zero with either instrument, moving the vernier jaw until its second line coincides with the second line on the scale will give .001″ opening; moving the jaw to bring its third line coincident with the next forward line on the scale will give .002″ opening, etc. Thus, to set the caliper shown in the figure:

Divide the number of thousandths of an inch in required dimension by number of thousandths in smallest division of the scale S, both values being expressed as whole numbers. Move sliding jaw until its zero-mark points off the number of divisions on the scale indicated by the whole number in the quotient. Move jaw further until the line of the vernier corresponding to the number of thousandths in the remainder coincides with the next forward line on the scale. The opening at O will be as required. For example, let it be required to set this caliper to .137″. $137 \div 20 = 6$ as the whole number in the quotient, with 17 as the remainder. So we move the sliding jaw (vernier jaw) a distance equal to six divisions on the scale S, and then move it further to bring its seventeenth division in line with the next forward division on the scale. If the required dimension be divisible without a remainder by the number of thousandths in the smallest scale division, the required dimension may be read from the scale as would be done with a common scale.

Applying the same rule to the other Vernier caliper and using the same required dimension for opening of jaws we have $137 \div 25 = 5$ for the number of fortieths to be read from the scale, and 12 as the number of thousandths to be measured by the vernier.

Micrometer-calipers.—This instrument, the typical form of which is shown in Fig. 17, is perhaps more generally used than the Vernier caliper. It consists of the U-shaped frame A, the anvil B, spindle C, sleeve D, and thimble E. The spindle is threaded on the concealed end and screws through a fixed nut in the frame. In setting the instrument the thimble E is turned by the fingers, carrying the screw and

spindle with it. The thread on the screw is $^1/_{40}'' = .025''$ lead. Therefore one revolution of the thimble advances the spindle .025", which is equal to the smallest division on the sleeve *D*. The beveled edge of *E* is graduated into twenty-five divisions. If then *E* be turned one division, the spindle will advance $^1/_{40} \times {}^1/_{25} = .001''$. Thus to determine the opening between *B* and *C*, read the graduations on the sleeve *D* as of a common rule, observing that each *numbered* division equals .100", which corresponds to four revolutions of the thimble. Add to the value thus found as many thousandths of an inch as there are divisions on the thimble between its zero and the longitudinal line on the sleeve. The sum gives the opening, which on the instrument of the illustration is .178". Some mechanics, when confused as to the read-

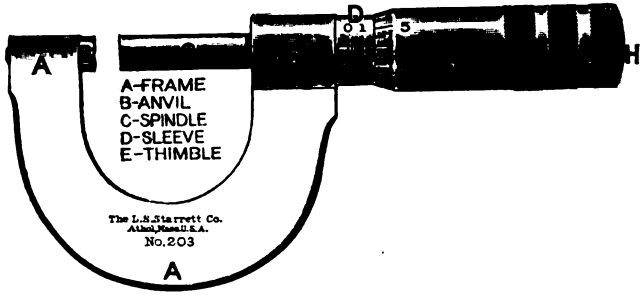

FIG. 17.

ing, screw the spindle against the anvil and then unscrew it again, noting the number of turns. Multiplying the number of turns by .025 and adding the thousandths indicated on the thimble gives the opening.

When the zero of the thimble does not correspond to the zero-line of the sleeve the correction may be made (in most micrometers) by a small screw at the outer end of the anvil.

Vernier Graduation on Micrometers.—When a micrometer-caliper has *vernier graduations* these are placed on the sleeve and read in connection with the .001" divisions on the thimble. Fig. 18 shows one of these instruments. Ten of the vernier divisions or spaces at *D* equal nine on the thimble *E*. The thimble spaces being .001", the difference equals $^1/_{10} \times {}^1/_{1000} = {}^1/_{10000}$ or .0001". The principle is, of course, the same as explained in connection with Fig. 16, but the finest readings are in ten-thousandths, while the Vernier caliper of Fig. 16 reads no finer than thousandths.

Large Micrometer-calipers.—Makers of micrometers furnish these instruments with various modifications and minor improvements.

One design is somewhat similar to the Vernier caliper of Fig. 16; but instead of the vernier it has a micrometer-screw arrangement in the end of the sliding jaw. The screw-thread is cut but little longer than one inch (as is the case with most micrometers), but the sliding jaw

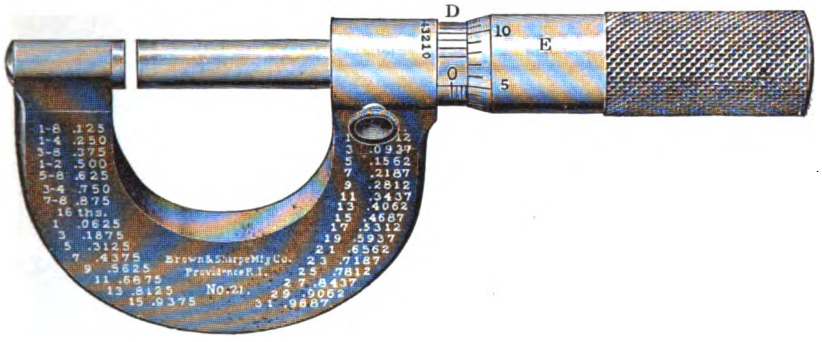

FIG. 18.

can be locked at intervals of one inch up to six inches from the fixed jaw. Micrometers of the U-shaped pattern have been made with a measuring capacity of twelve inches. Sweet's measuring-machine, Fig. 19, is a good example of a large micrometer. Instead of having

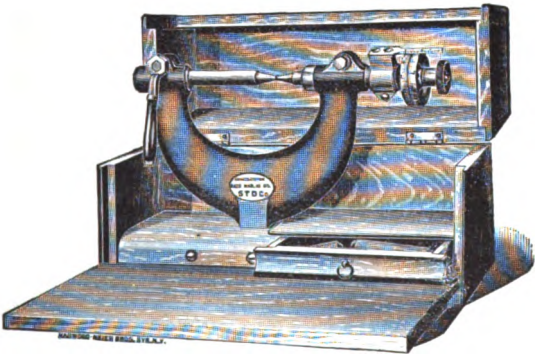

FIG. 19.

$1/40''$ lead, the screw in this instrument has either $1/10''$ or $1/20''$ lead. As the range of the screw is but one inch, test-rods are furnished for the zero positions when measuring greater dimensions. To guard against errors that might be occasioned by handling these rods (which errors would be caused by the temperature of the hand), the rods are covered with rubber sleeves. This provision emphasizes the precautions necessary in very fine measurements.

Methods of Compensating for Errors in Screws.—There is considerable difficulty in making screws sufficiently accurate for measuring-instruments. This difficulty is due in part to commercial considerations—the price must not be prohibitive. A method of compensating for minute errors in screws is illustrated in Fig. 20. Referring to this figure, which shows an instrument of the same design as that represented in Fig. 17, E is the thimble, D the sleeve, C the spindle, and B the anvil. As the thimble revolves in the direction of the arrow it is advanced by the concealed screw toward the zero-mark, O. Suppose that this screw is exactly $^1/_{40}''$ lead. Then will the zero-mark on the beveled

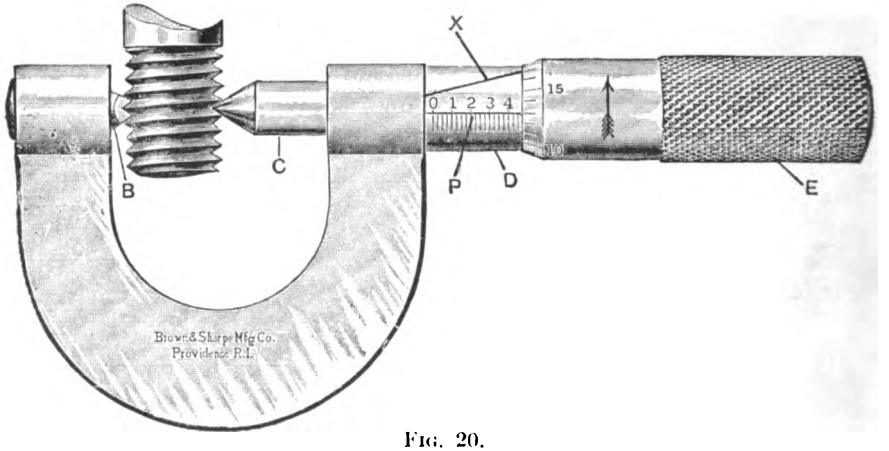

FIG. 20.

edge of the thimble indicate $^1/_{40}''$ advance for each revolution or for each time it passes a line P, drawn parallel with the axis of the thimble. If, however, the lead of the screw be slightly greater than $^1/_{40}''$, then it will require *less than one revolution* to advance the thimble $^1/_{40}''$, and the line P should be drawn at *some angle* with the axis of the spindle, as at X. This line X may be marked as follows: Starting with the anvil B and spindle C in contact, both B and C being assumed to have flat ends, establish first the two zero-marks on sleeve and thimble. Now unscrew C, and with a test-piece $^1/_{40}''$ long resting against B, screw C against the test-piece. A point marked on the sleeve coincident with the zero-mark of the thimble will lie on the required line. In a similar manner, and with other test-pieces varying in length by fortieths of an inch, any number of points in the required line may be established. A detachable bar graduated and set to the required angle is used on some instruments. If the screw of the instrument be of irregular lead, the

line may be considerably curved. This compensating method involves an important principle, which may admit of other applications in connection with screws.

This process of establishing by test-pieces points on the graduated line of a micrometer is not known by the writer to have been used, but it is mentioned for the instruction of the student as a possible method. However, the angular line itself is known to have been used for correcting, or compensating for, errors in screws.

The Pratt and Whitney Measuring-machine.—We have already alluded to the refinements necessary in making subdivisions of the standard yard, in originating standard gages, etc. Fig. 21 shows a machine for this purpose. An adequate description of this machine is impossible within the space here available. The manufacturers claim that it readily indicates variations within $^1/_{100000}''$. This is about $^1/_{300}$ the thickness of common newspaper. The largest of these machines have a measuring capacity of 80". They are made for either the English or the metric system as required.*

Screw-thread Micrometer-caliper.—For measuring the U. S. standard and V-shaped screws there is a special micrometer-caliper. The measuring-points of this instrument are of special construction, as shown in Fig. 20, the movable point being cone-shaped and the fixed point V-shaped. Thus the points are in contact on the angular sides of the thread rather than at top or bottom, and the dimension registered is the pitch diameter. To obtain the outside diameter we add to the pitch diameter .6495" divided by the number of threads per inch for U. S. standard, and .866" divided by the number of threads per inch for V thread.

The Inside Micrometer-gage shown in Fig. 22 was designed primarily for internal measurements, but it may be used as an end gage, for setting calipers, and in other ways. The thimble is graduated to thousandths of an inch, and the screw has a movement of half an inch. By using the extension rods shown in connection with the instrument, measurements may be made in thousandths of an inch from 3 to 6 inches.

Fig. 23 shows a **Micrometer Depth Gage.**—The measuring-rod on this instrument has little V grooves exactly half an inch apart (as have also the extension-rods shown in Fig. 22), and the screw has a movement of half an inch. By an ingenious clamping device near the end of the thimble the rod may be adjusted and clamped at intervals of half an inch from zero to $2^1/_2''$. The thimble is graduated to read to thousandths of an inch, and by this means, in connection with the screw, any dimen-

*To insure the highest degree of accuracy in a measuring-machine, it is essential that the measuring-nibs be in very nearly the same line as the scale.

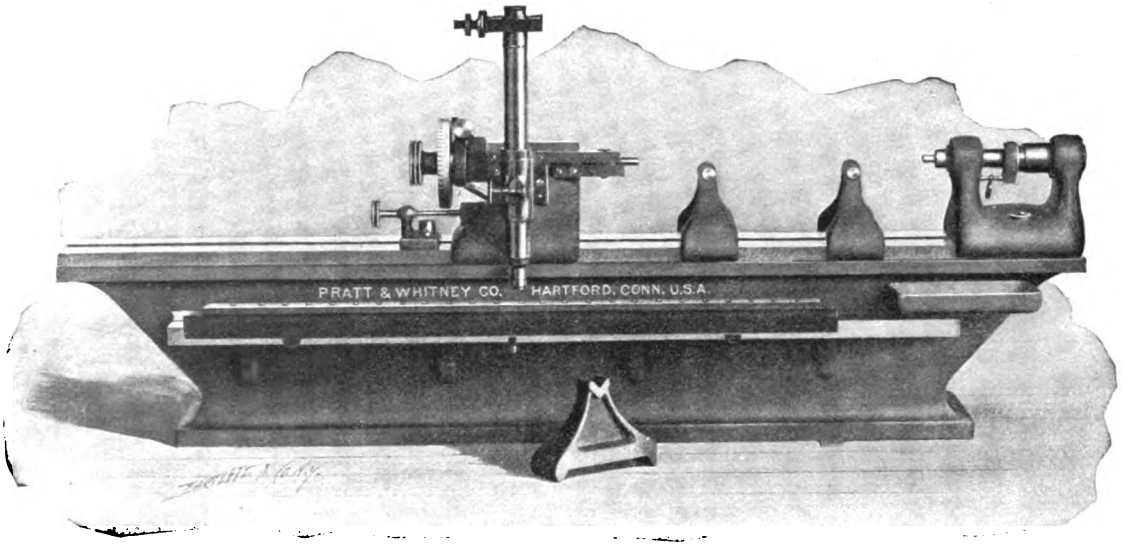

Fig. 21

sions between the notches may be measured in thousandths of an inch. This instrument is used in measuring the depth of slots, drilled holes, etc.

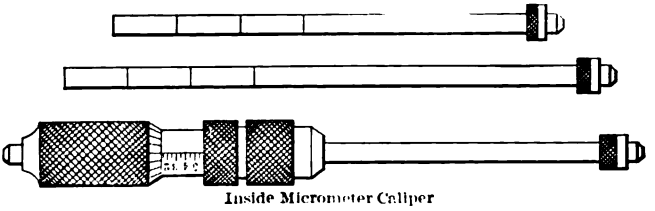

Inside Micrometer Caliper

FIG. 22.

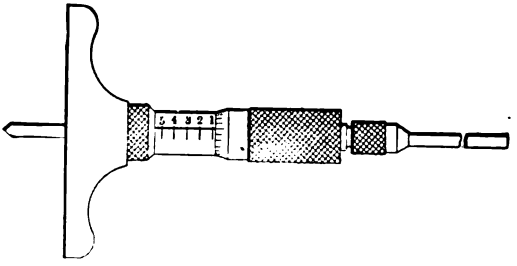

FIG. 23.

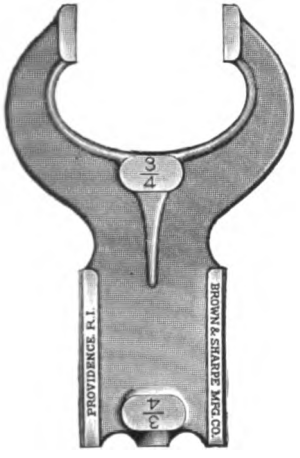

FIG. 24.

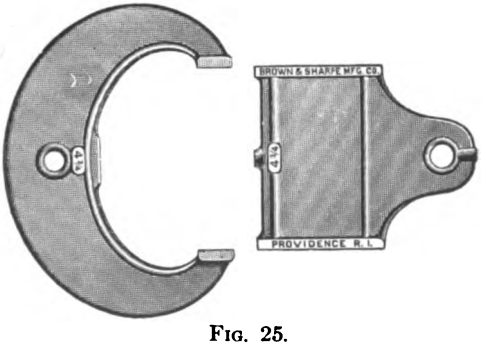

FIG. 25.

Caliper-gages (Figs. 24 and 25).—The caliper-gage is a non-adjustable gage for standard dimensions. As made by the Brown & Sharpe Manufacturing Company, these instruments vary in sixteenths of an inch from $1/4''$ to $2''$, and above $2''$ in eighths of an inch. Being made in the

caliper form they are as well adapted for measuring rectangular shapes as for cylindrical. The caliper-gage should not be applied to a shaft while the shaft is turning; for, notwithstanding it is made quite rigid, it is likely to be sprung out of shape if used in this manner. Obviously it may be used to set common calipers by, as well as for direct measurement. All things considered, the caliper-gage is the best standard measuring-instrument used in the shop.

Collar- and Plug-gages (Figs. 26 and 27). — Collar- and plug-gages are cylindrical in form and are preferred by some mechanics because

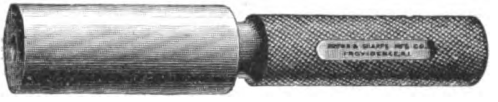

FIG. 26.

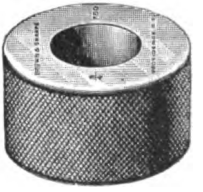

FIG. 27.

of their greater durability and because they are more reliable for cylindrical shapes than the caliper-gage. But the collar cannot be applied to rectangular shapes, nor can it be applied to such work as crank-pins, and similar work having a small diameter between two larger diameters. The cost is also greater than that of the caliper-gage.

Limit-gages (Fig. 28). — The limit-gage is used where extreme accuracy is not required. It is always made with two dimensions,

FIG 28.

one larger and one smaller than the nominal size. It is intended that the larger size shall go on, and the smaller size not go on, the work.

Thus, if the piece of work is made of a size between the two sizes of the gage, it is considered sufficiently accurate for the work in hand. The difference between the two sizes depends upon the quality of the work and may vary from .001 to .005 of an inch. The limit-gage is made both in the internal and external form.

Machining work to an exact size is very expensive, and it is obvious that the limit-gage, wherever it can be used, is a great time-saver. In some lines of machinery, where competition is very close, it has been found well-nigh indispensable. The limit-gage is a comparatively modern tool, and it is not fully appreciated; but it will doubtless be more generally used in the future.

An Adjustable Limit-gage is shown in Fig. 29. It will be understood that the adjustment is effected by the screws shown. These gages

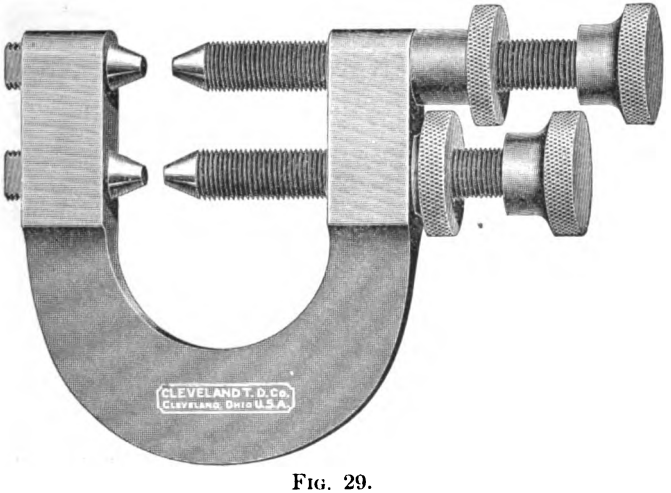

FIG. 29.

could be made with micrometer-screws and thus the difference would be registered.

A gage of this form having only one screw is called a *snap-gage*.

External and Internal Thread-gages.—In Figs. 30 and 31 are represented external and internal standard thread-gages. The slight adjustment provided in Fig. 30 is not intended for different sizes, but rather to compensate for wear of the instrument. In the manufacture of taps and dies, and in any other case in which accurate measurement of screws is necessary, these instruments are very reliable. As the collar and plug-gages are to the micrometer-calipers, so are these instru-

ments to the screw-thread micrometer, and by some they are used in preference to the latter instrument. The blank end of Fig. 31 is a gage for the hole before thread is cut.

FIG. 30.

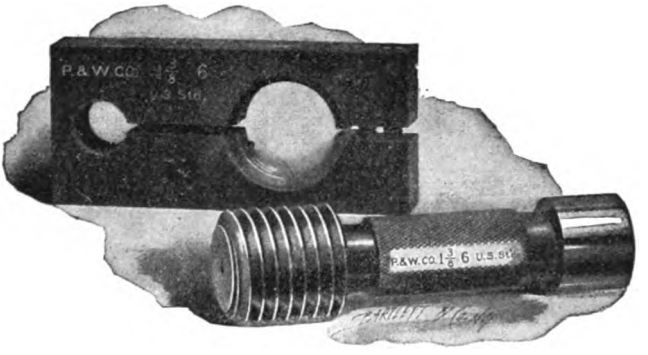

FIG. 31.

Thread- and Center-gage (Fig. 32).—One of the smallest standard gages used in the machine-shop is the thread-gage. This is used not only for testing the shape of the thread-tool, but also for setting the tool when cutting thread in the lathe. It is used on U. S. standard

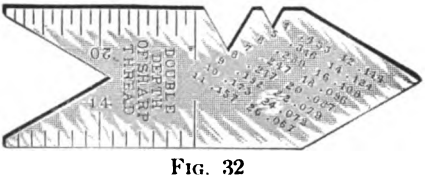

FIG. 32

and V-shaped threads for setting the tools, and in grinding the tools for V threads. It has still another application: the U. S. standard and V-shaped threads, having the same angle as lathe-centers, 60°, the large V on the end of the gage is used to test the conical end of the lathe-center. For this reason it is sometimes called a center-gage. The use of the instrument for setting a thread-tool will be more particularly described in connection with the subject of screw-cutting.

The gage shown in Fig. 33 is used for testing the shape of thread-tools for U. S. standard thread.

Thread-pitch Gage (Fig. 34). — The thread-pitch gage is sometimes confused with the thread-gage. The purpose of this instrument is not to test the angles of the thread, but *the pitch of the thread.* It

consists of a number of gages hinged on a common center, each of which is adapted to one particular pitch, which pitch is indicated on the gage

FIG. 33.

Templets. Distinction between Templets and Gages. — Another instrument used to some extent is the templet. There is some confusion in the minds of mechanics respecting the distinction between

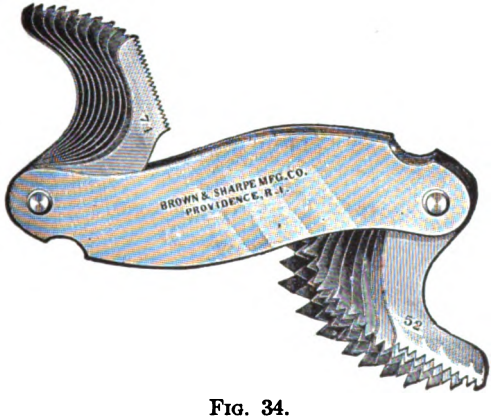

FIG. 34.

templets and gages. A templet is a pattern by which to mark off the shape of a piece of work or to mark positions for holes, etc. Templets are generally made of sheet steel, but a modified form of templet is a frame (generally made of wood) having holes by which the foundation-bolts for engine bed-plates, etc., are located. A gage is a standard of measurement or shape, but a gage may be used as a pattern to mark off a

shape or size, and a templet may be used to test a shape; there is, therefore, an overlapping of the definitions, hence the confusion. A gage, however, is more frequently used for regular shapes and sizes, and a templet for special or more complicated shapes.

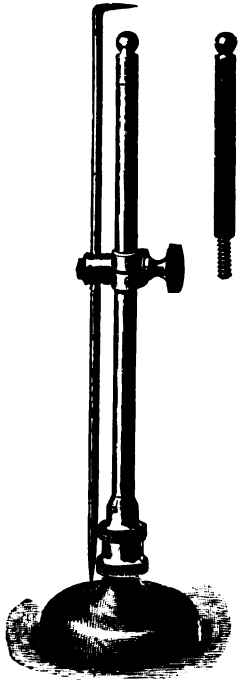

FIG. 35.

Surface-gages.—The surface-gage is quite a departure, both in its design and in its use, from any of the instruments heretofore described. A typical form of this tool is shown in Fig. 35. It consists of a base similar to that of an ordinary lamp, and a central stem, which stem carries a needle and a clamp by which the needle may be held in any position on the stem. This instrument is used in connection with a base-plate for establishing centers, marking center lines, etc., when laying out work. It is also used to adjust work on a planer, and sometimes on the lathe and drill-press.

A special design of this instrument is so constructed as to admit of its use on cylinders. This modified design has a V-shaped grooved cut lengthwise through the base by which the gage may be revolved around the cylinder to mark concentric circles on the end of the cylinder, as shown in Fig. 36. It may also be used for small work in general.

Wire-gages, Twist-drill Gages, etc.—There is a class of gages used for measuring sheet metal, wire, etc., in which the sizes, with few exceptions, are denoted by numbers. The most common forms are the circular disk with slots cut in the periphery, the rectangular plate with slots in the two edges, and the rectangular plate with a long angular slot

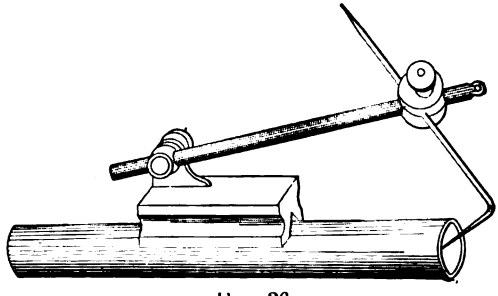

FIG. 36.

lengthwise of the plate. These are shown in Figs. 37, 38, and 39 respectively. Numbers near the slots indicate the dimensions, the wire or the plate being measured by passing either into the slot. In the case of the gage having angular openings the article is passed down the

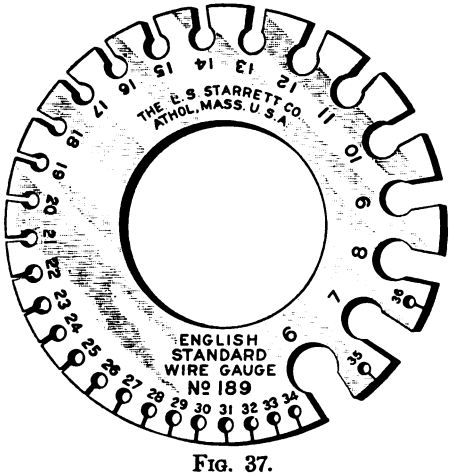

FIG. 37.

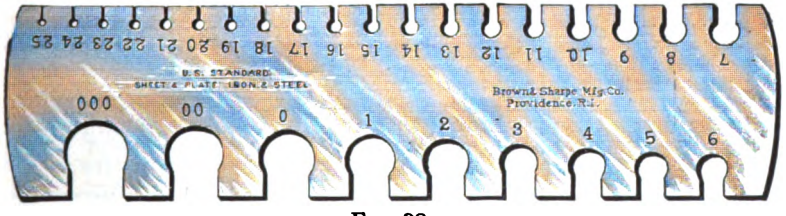

FIG. 38.

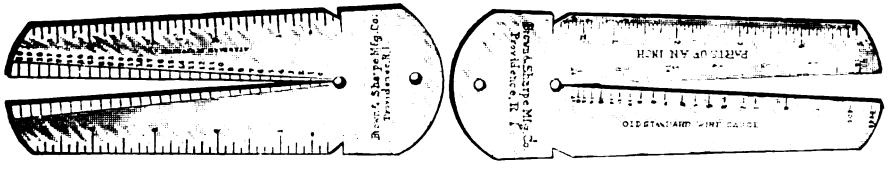

FIG. 39.

slot until it touches two sides, the number at the points of contact indicating the size. The method of using the drill-gage will be readily understood.

As the numbers of most of the gages are arbitrary, one must be familiar with the significance of the numbers, or consult a table to ascer-

tain the values. There would be no serious trouble here were it not for the fact that there are so many different gages, and so few persons understand the usage prevailing among the manufacturers, or the *importance of specifying the gage to be used.* Ignorance on this subject has caused delays, endless disputes, and sometimes expensive lawsuits.

The following table, which is not complete for any of the gages, gives the names, numbers, and corresponding values of most of the gages used in this country, and some that are used in foreign countries. (8–0, 7–0, etc. = 00000000, 0000000, etc.)

No. of Gage.	American or Brown & Sharpe.	English, Birmingham, or Stubs' Iron Wire.	Washburn and Moen's or Roebling's.	British Imperial Wire-gage.	Stubs' Steel-wire Gage.	Washburn and Moen's Steel Music-wire Gage.	Wood- and Machine-screw Gage.	Stubs' Drill-gage.	U. S. Standard for Sheet and Plate Iron and Steel.	Whitworth Gage.	Trenton Iron Co.'s Wire-gage.
	1	2	3	4	5	6	7	8	9	10	11
8–0	.....	.....	.....	.....	.....	.0083					
7–0	.....	.....	.49	.5	.....	.0087	.....	.....	.5		
6–0	.....	.....	.46	.464	.....	.0095	.....	.....	.46875		
5–0	.....	.....	.43	.432	.....	.01	.....	.....	.4375	.....	.450
4–0	.46	.454	.3938	.400	.....	.011	.....	.....	.40625	.....	.400
3–0	.40964	.425	.3625	.372	.....	.012	.03152	.....	.375	.....	.360
2–0	.3648	.38	.3310	.348	.....	.0133	.04468	.....	.34375	.....	.330
1–0	.32486	.34	.3065	.324	.....	.0144	.05784	.....	.3125	.....	.305
1	.2893	.300	.2830	.300	.227	.0156	.071	.228	.28125	.001	.285
2	.25763	.284	.2625	.276	.219	.0166	.08416	.221	.265625	.002	.265
3	.22942	.259	.2437	.252	.212	.0178	.09732	.213	.25	.003	.245
4	.20431	.238	.2253	.232	.207	.0188	.11048	.209	.234375	.004	.225
5	.18194	.22	.2070	.212	.204	.0202	.12364	.2055	.21875	.005	.205

If one will take the time to thoroughly investigate this matter, he will find that, notwithstanding there are so many wire-gages in use in this country, there are only three in general use. The American (or Brown & Sharpe), the English (Birmingham or Stubs' iron wire), and the United States standard gage are probably used in at least 95 per cent of the cases where wire and plate are measured.

Chas. A. Strelinger & Company of Detroit, who handle a variety of brass wire, sheet brass, etc., state in their catalog that unless otherwise ordered brass manufacturers furnish sheet brass, hard-drawn copper and German-silver wire, and brazed copper and brass tubing by the American gage; while for sheet copper, regular copper and brass

wire, and seamless brass tubing they use the English gage. The gage of column 9, known as the United States standard, was established in 1893 by Congress as the standard for sheet and plate iron and steel. It is used in determining duties and taxes on the above materials, and quite generally by manufacturers of sheet iron and steel for thicknesses below about $^3/_{16}$″. For heavier sheets or plates the Birmingham gage is used, as a rule. *In ordering any of the above materials the gage to be used should be specified.*

As the Stubs' gages are used extensively in America, it is important to distinguish between the Stubs' *wire-gage* and Stubs' *steel-wire gage*. It should be noted, also, that Stubs' wire-gage, the English wire-gage, and the Birmingham gage are one and the same. The Imperial wire-gage, which was adopted by Parliament in 1884 as the English standard, is not used to any great extent in this country. Neither is the "Old English" or London gage (which, as shown in the catalog of Merchant & Company of Philadelphia, agrees with Birmingham in all sizes between 0000 and 18) used to any considerable extent in America. Confusion respecting the identity of the gages will, in a large measure, be avoided by attention to the names given in the preceding table.

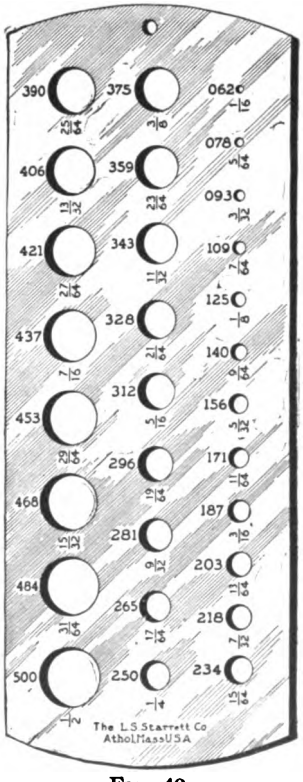

FIG. 40.

The Twist-drill Gage of column 8 and Fig. 40, though sometimes used for measuring wire, is the Stubs' *drill-gage*, and differs but little from the Stubs' steel-wire gage, with which it is sometimes confused. Indeed, it follows Stubs' steel-wire gage exactly for sizes larger than No. 1, which sizes in both of these gages are designated by letters. Thus, A = .234″ diameter, B = .238″ diameter, etc., the largest size, Z, equaling .413″ diameter. This gage is practically the standard of *numbered* drill-gages for the United States. It is very seldom that any other numbered gage is used for measuring drills in this country.

There is a drill-gage in common use known as the "*jobbers'*" *drill-gage*, on which numbers are not used. On this gage the dimensions are

given in binary divisions of the inch, and it includes all the sizes between $^1/_{16}$ and $^1/_2$ inch by sixty-fourths of an inch.

The Gage for Wood and Machine Screws is regarded as the standard of *numbered* gages in America for the purposes indicated, although the jobbers' drill-gage is used to some extent for "fractional sizes" ($^1/_{16}$, $^1/_8$, etc).

We cannot, within the space of this work, discuss the principles of the various gages, but, because of its radical and significant difference, the theory of the Edison gage is briefly outlined. The Engineering Department of the Edison Company designed this gage with special reference to electrical requirements. It is based on the sectional area of the wire, the number indicating the number of thousands of circular mils. A few sizes are here given:

Gage Number.	Circular Mils.	Diameter in Mils.
3	3000	54.78
5	5000	70.72
8	8000	89.45
12	12000	109.55

This gage has not come into general use, the American gage still being extensively used for measuring wire for electrical purposes.

Because of the confusion arising from the use of gages, there is a growing tendency to *specify the size of wire and sheet metal in thousandths of an inch*. Accordingly, we have the decimal gage, shown in Fig. 41, and the Whitworth gage, referred to in column 10 of the table. But as gages are more or less unreliable on account of wear, *the micrometer-caliper is used when great accuracy is required.*

In answer to an inquiry as to whether the mills would roll to any decimal of an inch without extra charge, Merchant & Company of Philadelphia replied:

"Mills that are rolling sheet brass or wire are quite willing to roll to decimals of an inch, but it is a very difficult matter to get any mills that are rolling steel or drawing steel wire to guarantee decimals of an inch unless they receive a special price for the work."

From what has been said respecting gages it will be observed that a wire-gage may be used for both wire and sheet metal, and that a twist-drill gage is sometimes used for measuring wire and screws as well as twist drills.

The Key-seat Rule is an instrument used in drawing parallel lines on cylinders, as in marking off key-seats. It is shown in Fig. 42. Fig. 43

shows the method of applying it to a shaft. Slight pressure at P causes the two edges to lie parallel with the axis of the shaft, when the lines may be drawn along the edge with a scriber.

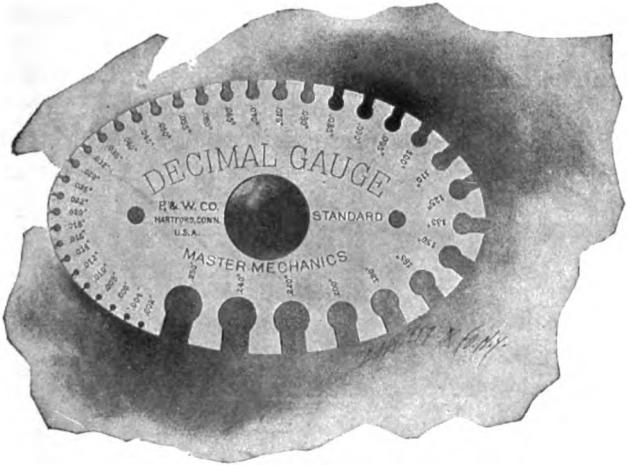

FIG. 41.

FIG. 42.

FIG. 43.

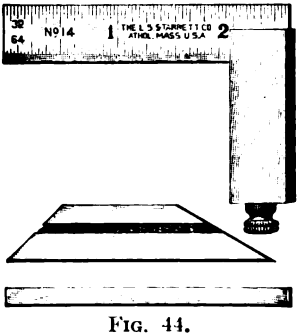

FIG. 44.

Machinists' Try-squares.—It is unnecessary to enter into a lengthy description of machinists' squares. A brief reference to a few of the more modern instruments will be sufficient. Fig. 44 shows a square

with three different blades. Each blade fits into the stock, and is held and adjusted by means of the thumb-nut shown at bottom of the stock. One of the blades is shaped to 30 and 45 degrees on the two ends. The narrow blade is very convenient for die-sinking and similar fine work. The special feature of this square is the provision for endwise adjustment of the blades.

The Combination Square shown in Fig. 45 is very much in favor. It combines in one instrument a square, center head, bevel protractor, spirit-bevel, and rule. Each of the first four may be quickly detached or used interchangeably with the rule. While these tools are fairly

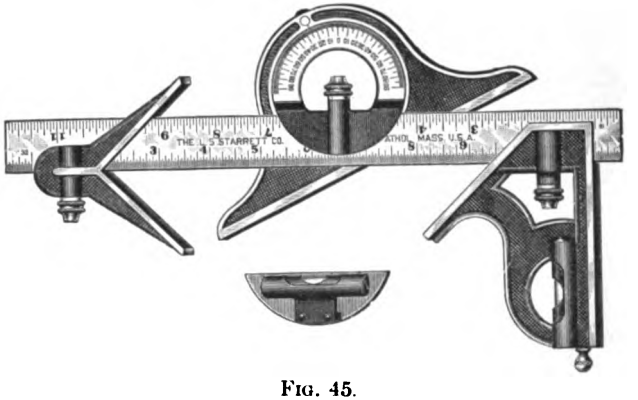

FIG. 45.

reliable, it is not likely that they can be depended upon to hold their original accuracy as long as the best *solid* steel square with hardened stock and blades.

Fig. 46, which is taken from an article by "E. A. R." in the "American Machinist," vol. 27, page 287, shows how the combination square may be used to measure tapers. The degree of taper is indicated on the instrument.

Fig. 47 shows a universal bevel protractor, and Fig. 48 shows its application to a variety of cases.

In the preceding pages we have described the principal measuring-instruments used in the machine-shop, and have referred to the high degree of accuracy possible in the use of some of these tools. But it should be understood that *different classes of work require different degrees of accuracy*, and, other things being equal, he is the best mechanic who knows about what degree of refinement is needed in each case. One may be a very skillful workman and yet be a failure from a commercial

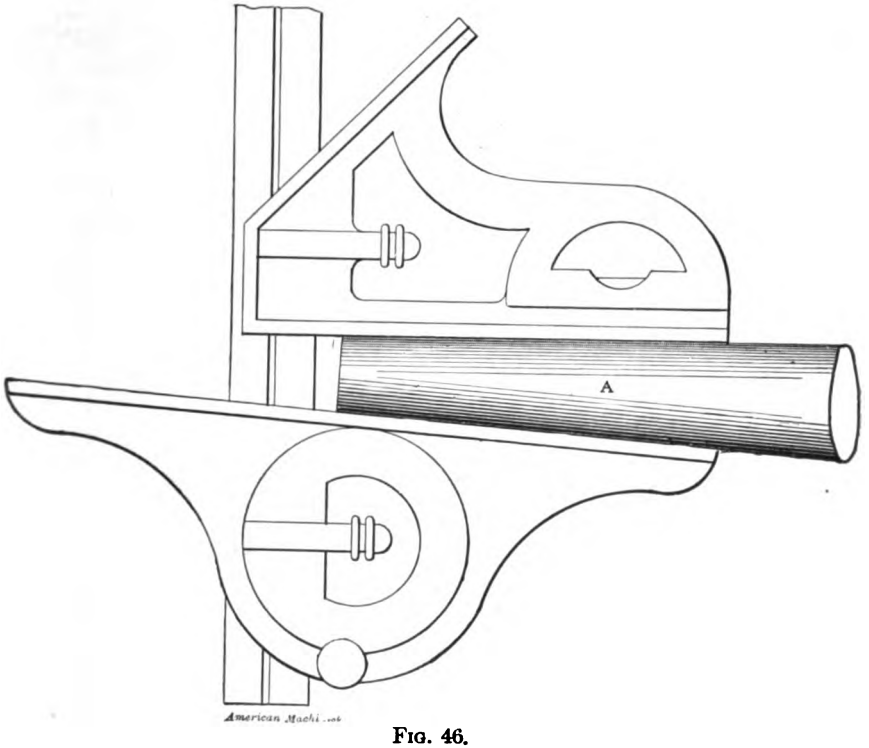

FIG. 46.

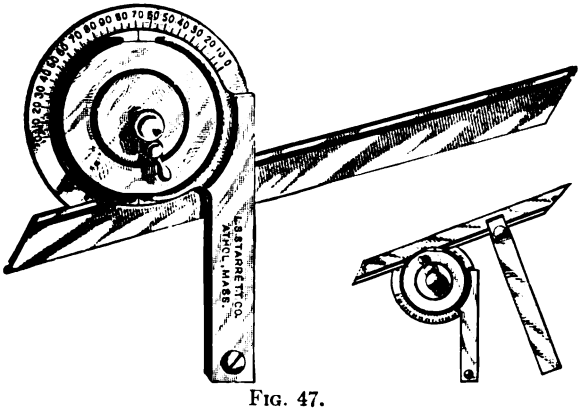

FIG. 47.

standpoint. It was this difference in judgment that led to the invention and development of the *limit-gage*. There is an impression that this instrument was designed for very fine and accurate work, but from

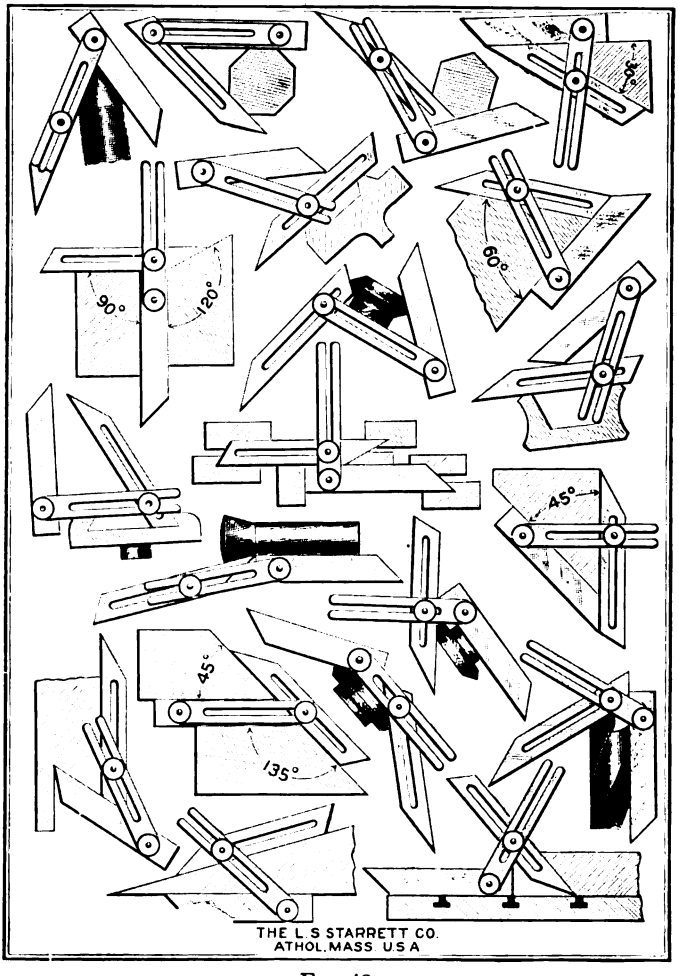

FIG. 48.

the above considerations, and what was previously said in this connection, it will be seen that the limit-gage is intended rather to prevent workmen from wasting time by being more exact than necessary. Caliper-gages and collar- and plug-gages are adapted to a higher degree of accuracy. As the plug-gage will not enter the hole until the latter

is as large as the gage, it is necessary to use common machinists' calipers or some other adjustable measuring-tool in connection with this gage. The same remark applies to inside caliper-gages, and with slight modification to collar- and caliper-gages for outside measurements.

A Peculiar Phenomenon.—Such tools as caliper- and plug-gages are machined to approximate dimensions of untempered steel and then hardened. Later they are ground to final dimensions by special machinery. But the steel seems to resent being subjected to any treatment immediately after the hardening process. Following this fiery ordeal the metal requires a prolonged rest. If not allowed this "seasoning," the gages will change in size or become otherwise distorted. Several months are required to thoroughly season such tools.

CHAPTER II

THE HAMMER AND ITS USE

Three Common Forms of the Hammer—Material, Weight, etc.—The hammer is one of the oldest instruments connected with industrial art. To trace its invention would necessitate a search through the remotest records of history. Notwithstanding its resonant din was not permitted within the walls of Solomon's temple, this humble tool was indispensably associated with some of the noblest structures of antiquity.

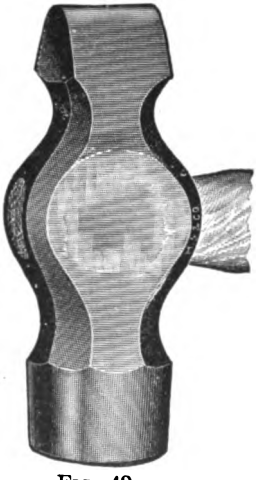

FIG. 49.

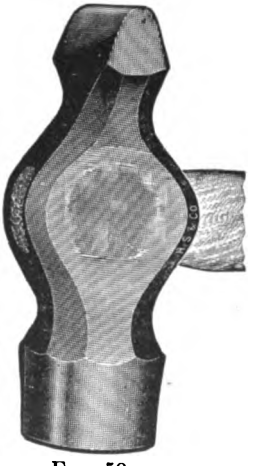

FIG. 50.

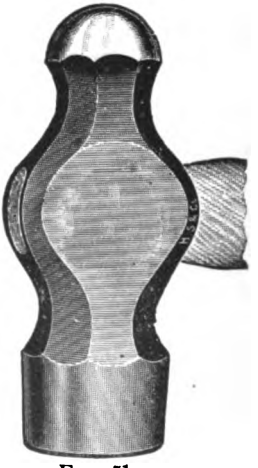

FIG. 51.

The three forms of the hammer in most common use are: first, hammer with flat peen parallel to handle (Fig. 49); second, hammer with flat peen at right angles to the handle (Fig. 50); and third, the ball-peen hammer (Fig. 51). Hammers are always made of tool-steel and tempered on each end about as hard as they will stand without breaking, the eye being left soft. As used in the machine-shop they are made in sizes varying from 6 to 28 ounces. The smaller sizes, from 6 to 16

ounces, are used for light riveting, laying out work, etc. The heavy sizes are used for heavy riveting, chipping, and for general shop work. The word "peen" refers to the upper end of the hammer—the end used in riveting. Used as a verb, it means to stretch by hammer-blows, as in straightening a shaft. The other end of the hammer is called the head. The opening in the center, called the eye, is oval-shaped and made flaring or larger at each end than in the middle. The handle should be so fitted to the eye that a plane passing through the axis of the hammer would bisect the handle through its long diameter, as at *AB*, Fig. 52. If the handle be otherwise set, a slight twisting motion of the workman's hand will be necessary in order to make the hammer strike a square blow. Some authorities say that the handle should set at right angles to the axis of the hammer, but the writer has observed that many machinists prefer to incline the handle slightly in the direction of the hammer-head. It should never incline in the opposite direction. The hammer is held on the handle by a small metal wedge which spreads the end of the handle, causing it to fill the flaring eye. The wedge should be *nicked* somewhat like a rasp to keep it from being jarred loose. In order to impart a certain flexibility to the handle it is made of smaller cross-section near the hammer or at the neck of the handle. The shock of the blow is by this means partly neutralized and the use of the hammer is rendered less tiresome. That part of the head which takes the blow is called the face. It is made slightly "crowning," or high in the center.

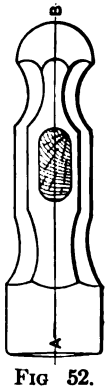

FIG 52.

Proper Method of Using the Hammer.—Some persons swing a hammer as they would a bat. This is a very awkward method. In striking a blow the hammer should move in a plane but slightly inclined from the vertical. In using the hammer the handle should not be gripped in the middle, as the beginner is likely to do, but *near the end;* and for the heaviest work it should be held at the extreme end. In this connection the writer recalls a story, read in some technical journal, which is substantially as follows: Bill Shirk applied to John Littlepay & Co. for a "job," and was set to work at $1.75 per day. Soon afterward the foreman noticed that Shirk held his hammer near the neck of the handle, and spoke to him about it. In replying, Shirk held up the hammer, exposing three marks on the handle. The first was $1.75, the middle one $2.50, and the mark on the extreme end $3. He explained that the marks indicated the relation between wages and work, and that it was

against his principles to do $3 work for $1.75 pay. Now that man's principles were entirely wrong. Not only does it make one appear awkward and inexperienced to grip the hammer-handle at the neck, but when the motive is that of Bill Shirk, or when the workman is so particular about gaging his work according to wages, he is very likely to have to continue at low wages. Furthermore, such a conception of one's calling, however humble that calling may be, is degrading. Work is simply another word for duty, and that word is sacred. "My Father worketh hitherto and I work," said the Divine Teacher. Then let us give to life's duties the best that is in us, whether we get "value received" or not.

Striking Two Blows for One.—Another awkward practice on the part of the novice is that of striking *two blows for one*—a heavy blow and then a light one. The student may as well overcome this fault in the beginning. He can make but little progress after this fashion.

Riveting.—The peen end of a hammer is used mainly for peening and riveting. The word peen has already been defined. Riveting is the process of upsetting by hammer-blows, or by machine, a pin or rivet to fasten two pieces of metal together. Riveting as used in connection

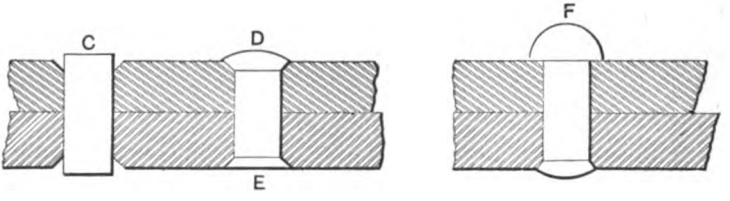

FIG. 53.

with boilers is sometimes done by hand and sometimes by machine, and the rivets are always heated. In riveting in the machine-shop the rivet, as a rule, is cold. A plain pin is inserted, as at *C* (Fig. 53), and the ends hammered down to fill the countersink, as at *D* or *E*; or a rivet is used, as at *F*, in which case one end only is riveted. While one end of the rivet is being hammered the other end must be supported by an anvil or any other suitable means.

Figs. 54 and 55 show a special method for riveting large pins. For this method the pin is placed in the lathe and the end recessed or cupped out, leaving a circular edge or ring *B* to be pounded down, rather than the whole end area of the rivet. This method is sometimes used for the crank-pins of engines, and may be used on any pins of about one inch

in diameter and larger. If the end of the rivet is to present a rounded or crowned finish, care should be taken that the pin be made long enough to have the bottom of the recessed surface project slightly beyond the surface of the crank disk or other work for which the rivet may be used.

In riveting, the force of the blow should be proportioned to suit the size of the rivet; comparatively speaking, light blows affect the end of the rivet, while heavy blows tend to bulge the rivet in the center respecting its length.

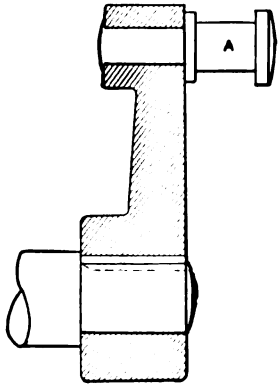

FIG. 55.

Straightening Shafts by Peening, by Screw-press, etc.—In the case of a bent or curved shaft the concave side of the shaft

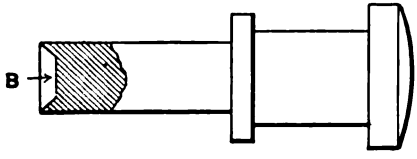

FIG. 54.

is shorter than the convex side, and in straightening the shaft it is required to make the two sides equal in length. That the concave side is shorter than the convex will be apparent if we consider the curved shaft as the sector of a circle: if sufficiently extended, the shaft will make a complete circle.

One method of straightening such a shaft is to place it on the centers in the lathe, pry up the convex side by a lever, and peen by light hammer-blows the upper side. This should be repeated until the shaft is found to be straight. To find the convex side of a shaft we revolve the shaft in the lathe and move a piece of chalk carefully toward the shaft until it touches the latter. The chalk will mark the convex side. As a more accurate method we may fasten a tool in the tool-post of the lathe, and, while running the lathe backwards, feed the tool toward the shaft until it touches the convex side. This method of straightening shafts applies in the case of an old shaft, but is not adapted to shafts which have to be machined. The reason why it is not adapted to shafts which have to be machined or turned is that the peening affects only the outer surface of the shaft, and the turning removes this outer surface. thereby partially neutralizing the effect of the peening.

For straightening shafts which are to be turned the screw-press method should generally be used, and in the case of a very large shaft it is some-

times necessary to heat the shaft. Lathes designed especially for turning shafting are generally provided with a suitable screw-press. This device consists essentially of a base and U-shaped standard, with a large screw passing through the projecting arm of the standard. It usually has four rollers designed to roll along the ways of the lathe. When a shaft is to be straightened it is placed in the lathe and the convex side found as above described. The press is now moved along the ways of the lathe until the screw is about central with the convex portion of the shaft. With the convex side of the shaft uppermost, and the under side of the shaft supported at two points on the base of the press, the pressure is applied by the screw and a lever. The screw is next released and the shaft again revolved to ascertain if the curved portion has been straightened. When straight the chalk will make a continuous mark around the shaft; if not straight, the process is repeated.

Straightening a Long Bar of Cast Iron.—For straightening a bar of cast iron (not a regular shaft) we usually ascertain the point of curvature by means of a straight-edge. Having found the convex portion, it is placed over an anvil or other suitable support, with concave side up, and pressure applied by hand to the ends of the bar. The bar is then peened on the concave side and again tested with straight-edge, the process being repeated until the bar is found to be straight.

There is, however, another method which has some advantages; this we call the dropping process. The bar or slab is dropped over a solid block of wood, the convex side striking the wood and the curvature being corrected by the momentum of the free ends of the bar. This avoids the bruising incident to the peening process, and in the hands of skillful workmen gives very satisfactory results. Care should be taken, however, to avoid dropping the bar too heavily, as there is some danger of breaking it. A bar of cast iron may also be broken by applying too great pressure while peening it.

Peening a Connecting-rod Strap.—That detail on a steam-engine which binds the crank-pin brasses to the connecting-rod is called a strap, or a connecting-strap. There are also the cross-head strap and the eccentric-strap, the latter serving a somewhat different purpose from the other two. Fig. 56 shows a connecting-rod strap. From various causes, sometimes due to errors in machining the straps, and at other times due to hard usage, these straps become spread, so that the opening is wider at A than at B. A knowledge of peening is very useful in this case. By holding the strap over a block of copper, or Babbitt metal, or hard wood, and applying pressure by a carpenter's clamp or other-

wise to draw the strap sides closer together at *A*, the strap may be peened by light hammer-blows at *C* until the error is corrected If the sides of the strap at *A* be too close together, the peening would of course be needed on the opposite side.

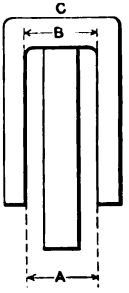

FIG. 56.

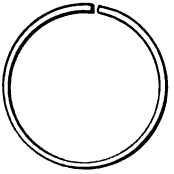
FIG. 57.

Enlarging a Piston-ring by Peening.—Fig. 57 shows one form of piston-packing or a piston-ring. The object of this device is to form a steam-tight joint between the walls of a steam-engine cylinder and its reciprocating piston. This form of ring is commonly made slightly larger in diameter than the cylinder-bore, and sprung to its place on the piston. If by long usage it becomes too small to make a good joint, it may be enlarged by peening the inside surface. The ring should be supported on a block of hard wood or bar of Babbitt metal, and lightly peened throughout its inner circumference, being frequently tested to ascertain whether it has been sufficiently spread. Piston-rings are usually made of cast iron and *special care is required in peening light sections of this material.*

Soft Hammers.—There is a modified form of hammer, sometimes called a mallet, which should be used more frequently in the machine-shop than it is. These hammers are made of copper, Babbitt metal, or rawhide, and are used for driving mandrels in work or adjusting work in the lathe, and in any case where it is desirable to avoid marring

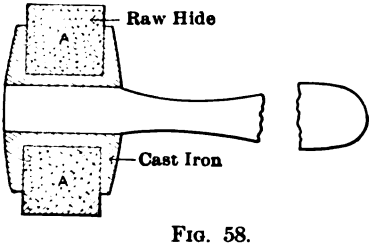

FIG. 58.

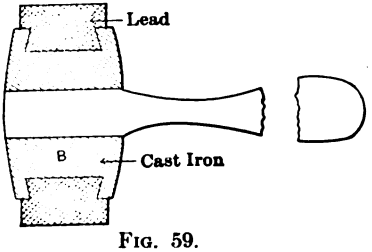

FIG. 59.

finished work. In the absence of such a hammer a block of hard wood may be used in connection with the ordinary hammer. For mandrels, however, a mandrel-press should be used when one is available, though many shops lack such a machine. Figs. 58 and 59 show respectively a rawhide mallet and a lead mallet. A rawhide mallet is made with

detachable heads or "faces" *A*, which fit in the metal (cast-iron or drop forging) part of the hammer as shown. Extra faces are furnished very cheaply by machinery supply houses. In the ead mallet the body *B* may be made of cast iron, the lead being held in the dovetail openings on the ends. These lead faces may extend about $^3/_4$" outside the cast iron, and for forming the faces a kind of open-and-shut mold enclosing the iron body may be used. Such molds may be purchased at the machinery supply stores.

CHAPTER III

CHISELS: THEIR FORMS AND USES

Names of Machinists' Chisels.—Machinists' chisels are distinguished from other chisels by not having handles. They are generally made of $^3/_4''$ octagonal tool-steel, and about 8″ long when new, although for very delicate work they are sometimes made of $^1/_2''$ steel. The most common forms are the flat and cape chisels. Other chisels used less frequently are the side chisel, the diamond-point chisel, the cow-mouth and the oil-groove chisels. The key-drift and pin-drift, while somewhat similar to the chisel, are used for different purposes. The center-punch and drift are modifications of the chisel.

The Flat Chisel (Fig. 60). — The flat chisel is tapered and flattened about $^1/_3$ its length to the cutting edge, which is about $^3/_{32}''$ thick on the $^3/_4''$ steel and proportionally thinner on smaller steel. The smaller chisels are also proportionally shorter. The flat chisel should be forged about $^1/_{16}''$ wider at the cutting end excepting when made especially for such soft metal as Babbitt, when it may be made as much as 50 per cent wider. But unless there is a considerable quantity of such work to do it will be hardly worth while to keep special chisels for the purpose. It will pay, however, to grind the chisel to a sharper angle for the softer metals, 30° included angle being about right for Babbitt metal, lead, and copper. For chipping brass and reasonably soft cast iron 45° will answer, while for average steel 60° would be about right.

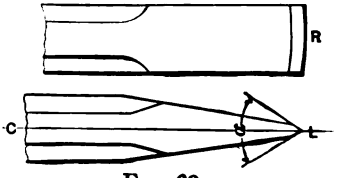

FIG. 60.

The experienced workman will not require a gage to test the chisel angle, but common angles, such as are found on certain tools, have been named as being convenient for those who prefer to use a gage. Thus the chisel for steel may be tested by a center-gage, which should be carried in every machinist's kit.

The flat chisel should be so ground that the center line *CL* in Fig. 60 shall bisect the angle of cutting edge, or angle *a*. Looking at the other view, the end of the chisel may be square with the center line, or slightly rounded, as at *R*. Many machinists think they can do smoother chipping with the chisel thus rounded.

A fault that the beginner is very likely to fall into is that of grinding the extreme end at an angle with the flat sides, as at *EF*, Fig. 61. The line formed at *EF* should, of course, be parallel with the sides, and the two facets *D* should be quite flat.

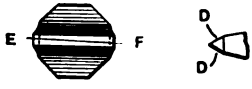

FIG. 61.

The Cape-chisel.—All that has been said respecting the flat chisel applies equally well to the cape-chisel, excepting that the sides at right angles to the cutting edge are narrower than the shank (octagonal part), and that the sides at right angles to these are spread wider where they join the shank. The cape-chisel will cut up some ugly capers if not properly forged and ground. If not made narrower at *AB* than *GH* (see Fig. 62), it will, when the corners wear dull or tapering at *GH*, wedge and possibly break open a frail piece in which it is being used to cut a slot. Referring to the end view, if the sides *IJ* are not ground approximately at right angles with *KL*, the chisel will twist and hang, and cannot be accurately guided in a slot or keyway. Fig. 63 shows a side view of the cape-chisel.

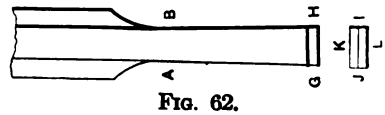

FIG. 62.

FIG. 63.

The Uses of Flat and Cape Chisels.—The flat chisel is used principally on flat surfaces, but it is also used for general chipping. If we have a light cut to take from any metal surface, we use the flat chisel, but if we are to cut $^1/_8$″ deep, or deeper, it is better to precede the flat chisel by grooves cut with the cape-chisel. The distance apart of these grooves should be less than the width of the flat chisel, thus leaving narrow strips to be chipped by the latter. This method is used in chipping broad surfaces, but it is unnecessary when the area is quite small. The surface shown in Fig. 64 represents this preparatory grooving with the cape-chisel; the intervening strips are to be cut away with the flat chisel.

There are other uses for the cape-chisel than that just described. It is used for cutting keyways in shafts, pulleys, gears, etc.; also for cutting slots. In cutting a slot with the cape-chisel, however, the

bulk of the metal is generally removed by drilling. Fig. 65 shows a finished slot. This slot *M* was first drilled with a drill $^1/_{32}$ of an inch

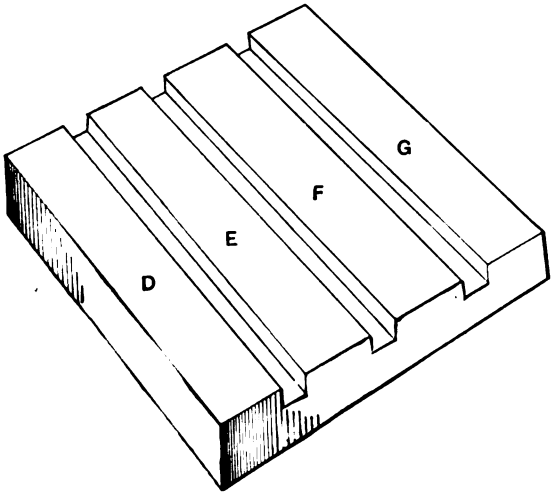

FIG. 64.

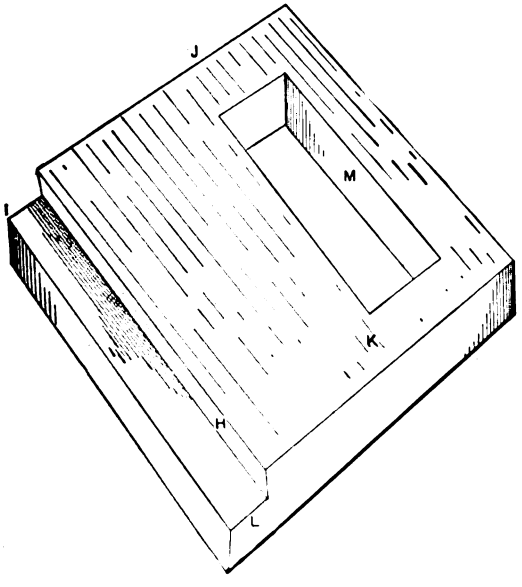

FIG. 65

smaller than the finished size, the distance apart of the centers of the holes being equal to the width of the slot. The metal between the

holes is cut out with a cape-chisel, and finished smoothly with a file. When slots are deep, say $1\frac{1}{2}''$ or more, we sometimes trim the sides with a side chisel. The latter is seldom used for any other purpose.

In cutting a keyway with the cape-chisel, if the keyway be made $\frac{5}{8}$ of an inch, or narrower, the chisel should be about $\frac{1}{32}$ of an inch narrower than the finished keyway. The remainder is removed by

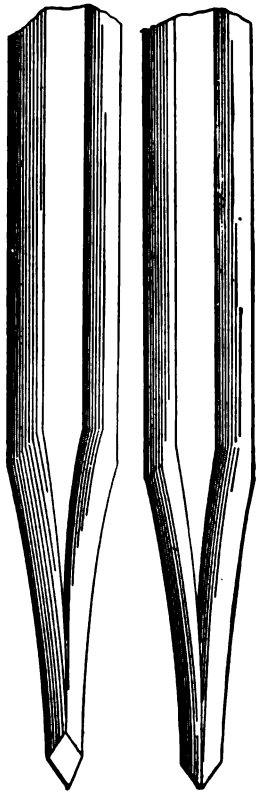

FIG. 66.

FIG. 67.

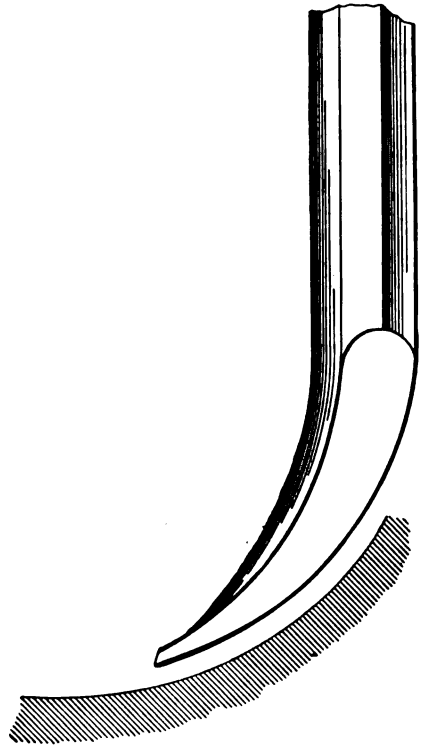

FIG. 68.

FIG. 69.

the file. If the keyway be $\frac{3}{4}''$, or wider, it is better to use a cape-chisel less than half the width of keyway and cut two grooves.

Forms and Uses of Other Chisels.—The diamond-point chisel shown in Figs. 66 and 67 takes its name from the fact that a cross-section near the point is approximately diamond-shaped. It is used for cutting holes in boiler-plate, to correct errors in holes while drilling, and sometimes for chipping oil-grooves in bearings. For the latter purpose, however, the oil-groove chisel shown in Figs. 68 and 69 is preferable. It

is merely a diamond-point chisel with the cutting end curved to facilitate its use for the purpose named.

If we round the back corner of the diamond-point chisel and bevel it on that side toward the point, it will become a draw-chisel. The use of the draw-chisel is referred to on page 105.

The Side Chisel differs from the flat chisel only in having the taper all on one side, as in Fig. 70. Its use has already been referred to.

The Cow-mouth Chisel derives its name from its curved shape; a better name would be *gouge*. It is shaped somewhat similar to the carpenter's gouge and is used for enlarging holes or chipping curved surfaces. See Figs. 71 and 72.

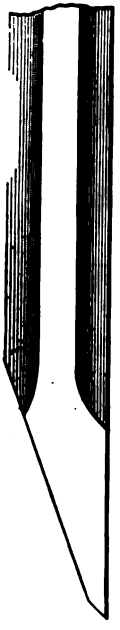

FIG. 70.

FIG. 71.

FIG. 72.

FIG. 73.

A Center-punch is a short punch with a conical point. It is used in connection with the hammer to indent the centers and circles in work preparatory to drilling, and in a similar manner to establish lines in laying out work in general. When the punch is used to establish lines the fine indentations are made sufficiently close together to answer the purpose of the lines should the latter become obliterated. In laying out machined surfaces it is often more accurate to depend upon the lines

alone, which in this case should be very clearly defined. Templets for important cams, etc., are often made of sheet steel in the condition in which it comes from the mill. To prepare such a surface for laying out it may be coated with a solution of blue vitriol. Thus prepared the surface is in shape to take sharply defined and permanent lines, and the use of the center-punch is scarcely necessary. Fig. 73 shows four center-punches; two punches, one for punching small indentations in laying out work, and a larger one to punch centers to guide the point of a drill, are sufficient. The smaller punch is often called a "prick-punch."

A Drift (Fig. 74) is a tool that is sometimes used instead of a file for enlarging holes, especially rectangular holes. For the latter purpose the cutting end is made of rectangular cross-section and equal in width to the finished hole. The drift has no proper cutting edge, but the end is at right angles to the body and cuts on the same principle as the punch used in punching holes in boiler-plate. It is driven by hammer-blows.

Fig. 74.

Fig. 75

The Key-drift is a tool for driving keys out of pulleys, gears, etc. Like the drift its small end is rectangular in cross-section, but it, of course, is not intended to do any cutting. See Fig. 75.

The Pin-drift is merely a round tapering punch for driving out pins which are used to hold such machine elements as crank-handles, levers, etc. It is shaped like the center-punch, excepting that the point is flat and the taper longer.

Smooth Chipping. Precaution to Avoid Breaking Edge off of Work, etc.—In chipping, the chisel should not be held near the cutting end, but near the head. To do smooth work it is necessary to maintain a constant inclination of chisel to the surface being chipped. The proper inclination is easily determined during the first few blows of the hammer. If the angle be too great, the chisel will cut too deep; if too small, the chisel soon ceases to cut. The smaller the angle between center line of chisel and surface of work, within the above limitations, the more effective are the hammer-blows, and consequently the greater the amount of work accomplished. But the smaller this angle, the sharper must the angle at cutting edge be ground, and this, also, is limited by considerations previously indicated, viz., the chisel edge will get blunt too quickly if ground to too sharp an angle.

The chisel should be kept well up against the shoulder formed by the cut. If a particle of metal or a small chip gets under one corner of the chisel, it will cause that corner to lift. A blow struck at that instant will cause the opposite corner to cut below the chipping line.

When the chisel approaches the edge of the surface it should be reversed, or the cut should be taken at right angles to the preceding cut. Otherwise the edge of the metal, especially if it be cast iron, is likely to be broken.

Precautions in Grinding the Chisel.—In drawing the temper on the chisel it should be plunged in water just at the time the color is changing from straw to blue. In exceptional cases, however, as when chipping extra-hard metal, the chisel may require to be made harder, but the hammer-blows must be correspondingly light. Otherwise the more brittle edge will fail.

No matter how carefully the chisel may be tempered it may be *softened* in a few minutes by *overheating the edge at the emery-wheel.* To avoid this a constant flow of water must be directed to the point of the chisel when grinding it. If the emery-wheel have no automatic water-supply, the chisel must be frequently dipped in a pail of water. Grinding the temper from the chisel is a common fault with beginners, and sometimes they botch their work by attempting to use the chisels in this condition.

When to Use Chisels.—In general the chisel should not be used when a machine is available for the work, because chipping is nearly always a slower process than machining. The chisel may be used to cut off risers and small irregularities from rough castings; for various odds and ends, incident to the fitting of machine details together, and especially in emergencies, or when not within reach of a machine-shop. In order to have an ever-ready and a systematic means of imparting instruction, an instructor may require a student to chip pieces which would otherwise be machined.

In this chapter we have discussed the principal considerations affecting the quality and quantity of work possible with the chisel. Failing to be instructed in these particulars the student will pay for his heedlessness in the extra work required in *filing away the irregularities* left by the chisel.

CHAPTER IV

FILES AND FILING

Definition and General Remarks.—A definition is scarcely necessary in this connection, but the file may be defined as a bar of tool-steel pointed at one end to receive the handle, and having cutting edges or teeth extending from near the handle to the opposite end. We use the file at the bench to remove irregularities left by the chisel, to fit parts together, and to smooth surfaces preparatory to the polishing processes. The file is used at the lathe in fitting, and in preparing the work for the final finish with emery.

One of the most difficult operations of the machine-shop is that of filing a *true plane.* Take, for instance, a rectangular block having a plane surface 2″×4″. To file this surface perfectly true is impossible; to file it sufficiently accurate to meet the most exacting demands requires a high degree of skill. With this in view the beginner need not get discouraged if his first efforts in using the file result in comparative failure.

Classification of Files. Tang, Pitch, etc.—There is a bewildering array of names, shapes, and peculiarities connected with the subject of files. Many of these names with their corresponding sections are shown in Figs. 76 and 77. The number adjacent to each section gives the length of that section, there being as many as fourteen different lengths and sectional areas under some of the names. The sections are not shown full size; they show the relative areas rather than the actual.

Fig. 78 represents various *cuts*, or teeth characteristics, the two extreme grades, "rough" and "dead-smooth," being omitted. Fig. 79 shows a common flat file without handle.

The spike-shaped end which receives the handle is called the *tang*, and the part at which the tang joins the file proper is the *heel.* The length of a file is measured from the heel to the end opposite the tang.

Notwithstanding the great variety of files they may be divided into three general classes, viz., single-cut, double-cut, and rasps. These again may be subdivided with respect to the fineness of the teeth as follows:

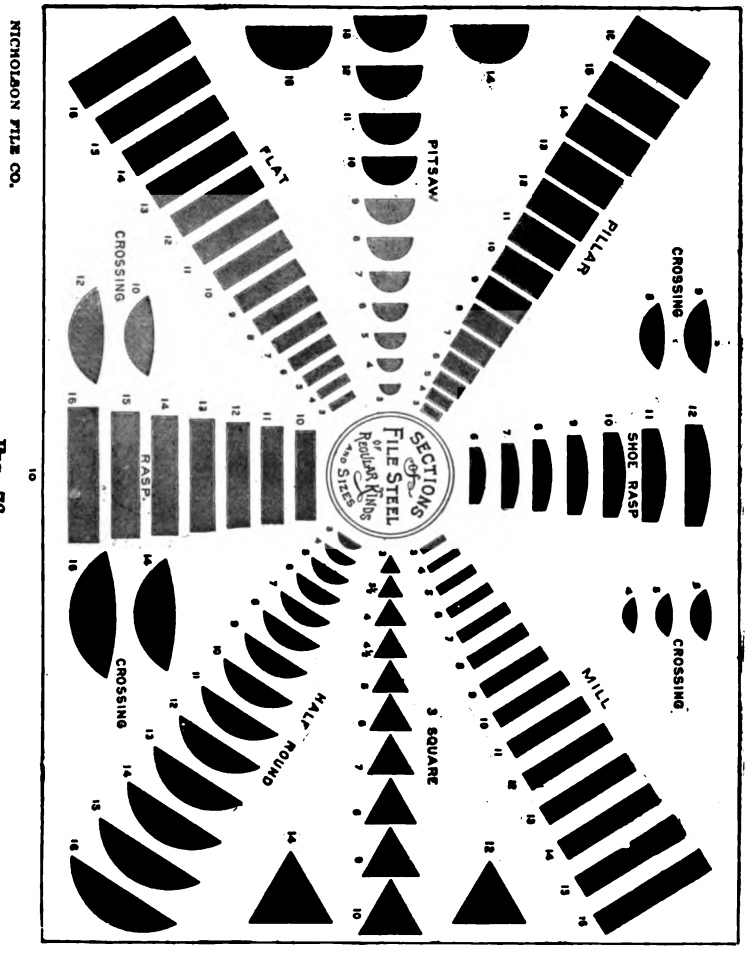

FIG. 76.

Single-cut into rough, coarse, bastard, second-cut, smooth.

Double-cut into coarse, bastard, second-cut, smooth, dead-smooth.

Rasps into coarse, bastard, second-cut, smooth.

Single-cut files have one series of teeth. Double-cut have a second series cut diagonally across the first series. Files are cut with a kind

of chisel-edge tool. Rasps are cut with a pointed punch. The teeth of rasps are therefore disconnected cutting points, rather than continuous cutting edges.

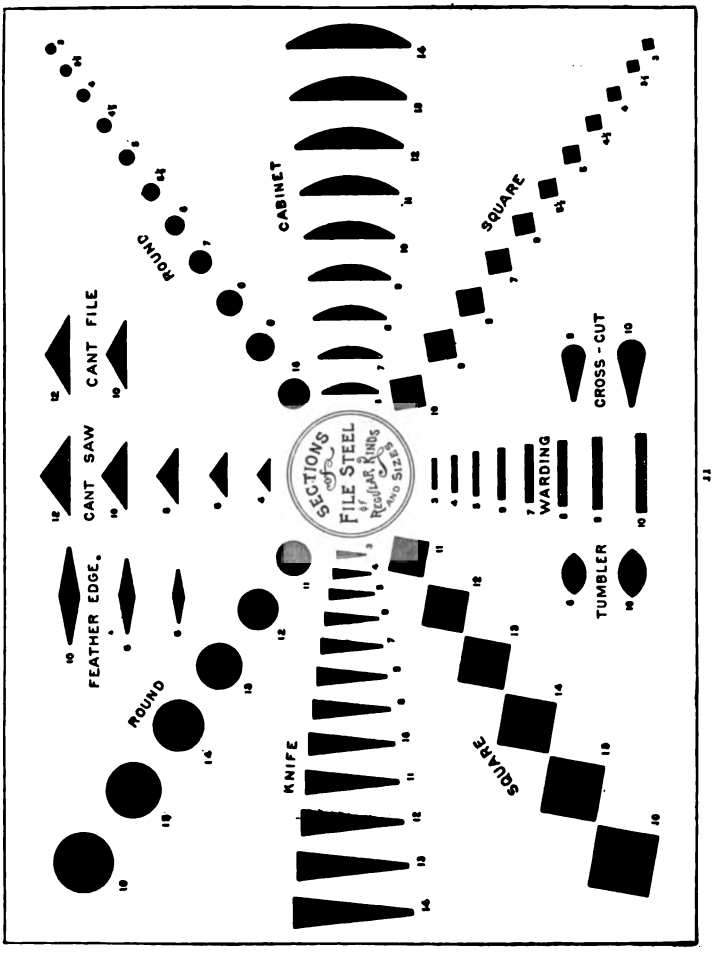

FIG. 77.

Pitch of Teeth Varies with Length of File.—The terms rough, coarse, bastard, second-cut, etc., refer to the pitch of the teeth, or degree of fineness, the coarsest being about 20 and the finest about 120 to the linear inch. It is important to observe, however, that these terms do not, independently of the length of the file, definitely express the number of teeth per inch for a given file. They rather indicate the range of

pitches for a given nominal cut. To definitely express the pitch the length of the file must be coupled with the name of the cut. Thus

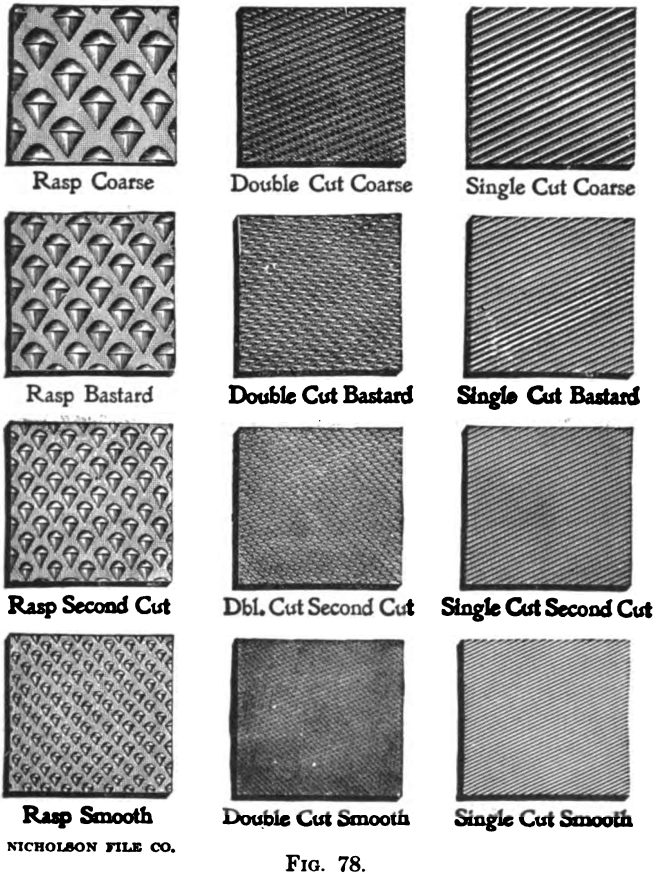

FIG. 78.

when we speak of the bastard file we refer to a subclass of files the pitches of which vary within certain limits directly as the length of the file

FIG. 79.

varies. But when we speak of a 12″ bastard we mean a file having a definite number of teeth per lineal inch. Fig. 78 shows different grades of cuts as they appear in 12″ files, and Fig. 80 indicates the difference

in pitch due to the difference in length between the longest and shortest files of the same cut.

To avoid the confusion which has often arisen the reader should note that the terms *double-cut* and *second-cut* are not synonymous. He should also remember that, as distinguished from *double-cut*, which *refers to a file having two courses of chisel-cuts* crossing each other, *single-cut means one course of teeth.*

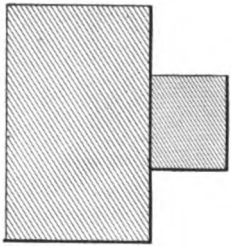

FIG. 80.

Classification of Files with Respect to Shape. Meaning of the Terms Taper and Blunt.—Mechanics often refer to files by names indicating the form of their cross-sections, these names being qualified by other names indicating the general contour of the files. With this in view the Nicholson File Company classify files as follows: Quadrangular, Circular, Triangular, and Miscellaneous. In connection with this nomenclature the terms taper and blunt are used.

A taper file is a file smaller in cross-section at the point than near the tang. The taper applies to both thickness and width and extends on an average about $^5/_8$ the file's length. A blunt file is uniform in sectional area throughout its length.

Quadrangular Sections.—The most important files in these sections are the following: The flat file, mill-file, and square file, each of which is made either blunt or taper; the hand-file and the pillar-file, each made uniform in width and tapering in thickness; the warding-file, which is made uniform in thickness, but much tapering in width; the equaling-file, made blunt only; the flat wood-file and flat wood-rasp, both made taper.

Mill-files are sometimes made with one or both edges semicircular.

The equaling-file is classed as blunt, because it is very nearly of that shape, but it is in reality very slightly bellied or curved.

Circular Sections.—Of these sections the most important are the round and half-round, made either blunt or taper; the pitsaw-file, blunt; the half-round wood-file, half-round wood-rasp, and cabinet-file, made taper.

Triangular Sections.—As indicated by their names, the files of triangular cross-section are used mainly for filing saws. Thus we have the hand-saw file, made either blunt or taper; the slim hand-saw or slim tapers; the double-ended hand-saw, the three-square, and the knife or knife-edge files, made taper; the cant-file and the cant-saw file, blunt;

and the band-saw file, made the same as the regular hand-saw, excepting that the edges are rounded.

Miscellaneous.—Of this class we mention only the crossing-file, made either blunt or taper, and the feather-edge file, made blunt.

Hand-cut and Machine-cut Files. Increment Cut.—Formerly all files were cut by hand, and machine-cut files had been on the market a long time before they were regarded as serious competitors of the older files. Notwithstanding that the hand-cut files were slightly irregular in pitch they showed a high degree of efficiency in operation. When it was discovered that their *irregularity* was in a large measure *the cause of the high efficiency*, the makers of machine-cut files endeavored to imitate this irregularity. As a result of such endeavor we have the modern *increment-cut file.* It is difficult to detect any difference between this file and the hand-cut.

Convexity of Files.—Convexity presents one of the advantages of the irregularly spaced teeth, viz., it *increases the bite* of the file by affording a smaller area of contact. Convexity is advantageous in another way, i.e., it compensates for the rocking motion of the file. This rocking or curved movement of the file must of necessity make a convex surface on the work when a "blunt" or straight-face file is used. Indeed it requires considerable skill to file straight even when a convex file is used.

Files are more or less bent during the tempering process. This may neutralize the convexity on one side and increase it on the other. By sighting along the face of the file one may easily determine which side is in proper condition for filing a plane surface. The opposite side of the file may be used for round work, either at the vise or while the work is in rotation in the lathe.

Grasping the File. Cross-filing and Draw-filing.—When heavy duty is required of a file a strong heavy file should be used. Such a

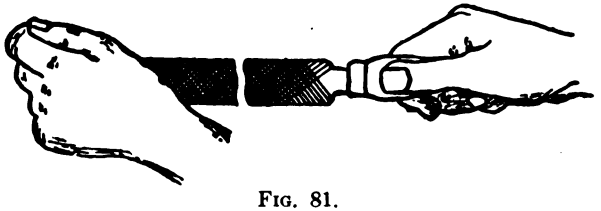

FIG. 81.

file should be grasped as in Fig. 81, the thumb of the right hand resting on top and the end of the file-handle pressing against the palm of the hand in line with the wrist-joint. This method is correct also for a

somewhat lighter file when the pressure is not great enough to seriously bend the file. But when the file is thin or likely to be bent by the pressure required to make it cut, it should be grasped as in Fig. 82.

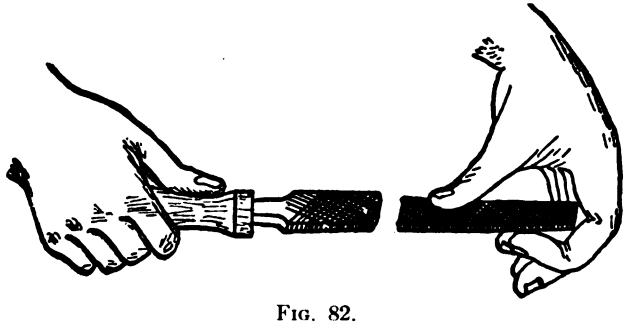

FIG. 82.

By thus grasping the file we may, by the downward pressure of the thumb and upward pressure of the fingers, support the file against flexure, which flexure would cause curvature of the work.

The height of the vise jaws should be about 42″ from the floor, though for the heaviest work it would be better to have the vise lower if it could be readjusted again to 42″, this height being suitable for general work. In heavy work the workman should lean forward somewhat, using the momentum and weight of the body to aid in applying pressure on the file. But in lighter filing he may stand more erect, depending mainly on the movement of his arms.

The above methods of grasping the file hold good when the strokes of the file are approximately in the direction of its length, or endwise. This movement of the file is called *cross-filing*.

In filing very light work the file is sometimes held with one hand, and in special cases, as for instance in filing the bore of a long-hub pulley, the file may be grasped at the handle end by both hands. These methods should also be classed under cross-filing.

Draw-filing is a slower process than cross-filing, but it makes a smoother surface. In draw-filing the file is moved in a path approximately at right angles to its length. Fig. 83 shows the method of grasping the file. Unless the file be of unusual length the handle should be removed. If the handle remain on the file, it should not be used in draw-filing. To avoid springing the file it should be grasped as close to the work as the width of the latter will permit.

As the face of the file is "bellied" lengthwise, it will, if moved in one unchanging path, make a concave surface on the work. To obvi-

ate this the position of the file in relation to the work should be frequently changed.

As draw-filing (on plane surfaces) is used mainly to give the final finish preparatory to polishing, the surface of the work should be filed very nearly true with a coarser file first. In some cases a second-cut file would answer for the draw-filing process, but for a finer finish the smooth file would be more satisfactory.

The *draw-filing* process is *sometimes used on cylindrical work*, such as piston-rods, etc. The object in such cases is to lay the direction of the file-marks parallel with the reciprocating motion of the rod, and

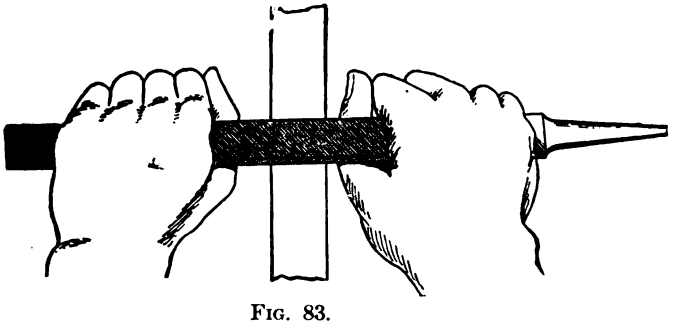

FIG. 83.

thereby lessen the wear on the rod-packing. Great care is required in such work to avoid introducing irregularities in the surface being filed. The lines of file contact around the rod or shaft should change in very small steps, and just sufficient filing should be done to hide the lathe-tool marks.

Safe-edge Files.—In filing work having two plane surfaces at right angles, as for instance the keyway in a shaft, it is sometimes necessary to file one of the surfaces without cutting the other. For this purpose we use a file having one blank side or edge. Such files are called *safe-edge files*, and they may be purchased of the dealers. But when one is not at hand it is permissible to grind the teeth off one edge or one side of a common file.

Pinning—Prevention of. Definition.—The term pinning means the wedging of minute lumps of metal ("pins") between the teeth of the file. It is different from the accumulation of file-dust. The latter may be brushed out with a file-brush or file-card made for the purpose see Fig. 84); but pins wedged in between the file-teeth must be removed with a pointed instrument. A machinist's scriber (a tool for drawing lines upon metal) will answer the purpose, as will also a piece of wire, or

a nail ground thin at the point. If not removed, the lumps of metal will cause scratches on the surface being filed.

Pinning may be partly prevented by use of chalk, oil, or turpentine. The latter is the best. Any of these substances may be applied to either the file or the work, but they should not be used on cast iron and brass. They are advantageous only in filing fibrous materials, such as wrought iron and steel. Any liquid, even the moisture of the hand, causes cast iron to glaze, when the file will not "bite" or take hold so readily. For this reason the workman should not test the smoothness of the filed surface by rubbing his hand over it. The beginner is very prone to

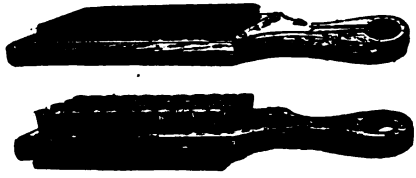

FIG. 84.

do this when smooth-filing, as the writer has often observed. A good illustration of the tendency of cast iron to glaze is that of a piston working in a steam-cylinder. The moisture of the steam and oil causes the piston-rings to take on a *glassy* surface which is decidedly advantageous in resisting wear of these parts.

Files Most Used in the Machine-shop.—Of the files described the most common are the flat file, half-round file, round file, square file, and three-cornered file. The surface to be filed will generally suggest the shape of the file. For plane surfaces one would naturally use some make of flat file; for interior curves and large round holes the half-round file; for small round holes the round file; and for slots, rectangular openings, etc., the flat file and square file alternately, with perhaps the half-round file for squaring the corners. As to the character and cut of the file, it may be stated in general terms that coarse and bastard files are used on common and heavy work, while second-cut and smooth files are used on finer work and for finishing work started by the coarse and bastard. When *an exceptionally fine finish* is required the *dead-smooth* file may be used. The rough file is seldom used. The file technically known as a flat file is used very extensively and for a great variety of work. It is made double-cut and mostly bastard, but may also be obtained in second-cut, smooth, and dead-smooth.

The Hand-file, being parallel as to width and taper as to thickness, differs from the flat file, which is full taper. Like the flat file it is double-

cut, mostly bastard, but it may also be had in second-cut, smooth, and dead-smooth. It is made in lengths from 4 to 16 inches, which are also the lengths of the flat file. The hand-file is of the same form in cross-section as the flat, the section of which is shown in Fig. 76. The hand-file is very generally used by machinists for finishing flat surfaces, and having one safe edge, it may be used in some cases in which the flat file will not answer.

The Pillar-file is nearly the same as the hand-file, but it is narrower. It has *one safe edge*, and in addition to being adapted to finishing flat surfaces in general, it is also made in extra-narrow form, which admits of its being used in narrow apertures where the hand-file would not apply. The wider pillar-files are made in lengths from 6 to 14 inches.

The Mill-file is always single-cut and mostly bastard. Its principal use is for sharpening mill-saws, mowing-machine knives and plows. This file has met with much favor in the machine-shop. It is well adapted to lathe work and to draw-filing at the vise. It is also used to some extent for finishing the various compositions of brass and bronze. In high-grade finishing it should be followed by some file of finer cut or pitch. The mill-file is made in lengths varying between 4 and 16 inches.

The Equaling-file is made from mill sections, but it is double-cut and blunt, mostly bastard. It is used for general machine-shop work. Length 6 to 12 inches. Seldom used.

The Round or Rat-tail File is double-cut and mostly bastard, as is also the half-round file. But the latter is made also in second-cut, smooth, and dead-smooth. Those made finer than bastard are single-cut on the convex side. Being made both taper and blunt, and in the above range of pitches, the half-round file has a very wide application in the machine-shop. Evidently it may be used for fine finishing to follow the mill-file, and in many kinds of work it may be used instead of the flat file and hand-file. The round file, being generally of bastard cut, is not well adapted to any other work than enlarging holes; but it is sometimes used in smoothing small fillets when a half-round file small enough is not available. Both the round and half-round files are made in lengths from 4 to 16 inches.

The reader will have observed that a slight modification in the name of a file sometimes materially affects its character and use. Thus the half-round wood file is made only in coarse pitch and in lengths from 8 to 14 inches. It is double-cut and used occasionally on coarse grades of brasswork, as well as for woodwork generally.

As previously stated, the files of triangular cross-section are used mainly for filing saws, the name of the file usually indicating the kind of saw for which the file is adapted. But the *three-square* or three-cornered file cannot be used in such work, for the reason that the corners or edges are left sharp and uncut. This file is quite generally used in the machine-shop for filing internal angles, for squaring the corners of rectangular apertures, keyways, etc., and for filing taps and cutters. It is double-cut and usually bastard. Length 6 to 14 inches.

Finishing a Flat Surface.—If the surface be rough as left by the chisel, it should first be cross-filed with a coarse or bastard file. During this process the direction of the file-strokes should be frequently changed, the angle of the alternating strokes being unimportant. The object of changing the strokes is twofold: first, to make the file "bite" more freely; second, to show more clearly the points of contact between file and surface, and thus enable the operator to correct any tendency toward curvature in the filed surface. In this connection refer to what has been said with respect to convexity in files.

Having thus filed the work as nearly true as practicable, the file-marks should now be reduced with a second-cut or smooth file preparatory to draw-filing. If the detail be steel or wrought iron, great care will be necessary during this preparatory work to prevent *pinning*. Draw-filing being a comparatively slow process, too much time will be required if deep scratches have been made in cross-filing. Work finished without first obliterating these scratches is sometimes sarcastically referred to by old mechanics as having "deep scratches and high polish." As has been indicated, it may be well to use chalk, oil, or turpentine at this juncture, if fibrous material is being filed.

For the draw-filing process a second-cut, smooth, or dead-smooth file would be used. Sometimes we use two kinds. This method will give a better finish, or leave less work to be done with the emery-paper or other polishing material. Assuming that a smooth file is to be used, the surface should be gone over very carefully with this file, preferably moving the file crosswise the grain of the metal. During this operation the surface should be frequently tested with a straight-edge or surface plate. Chalk used to prevent pinning will be found to be more convenient and offer less hindrance to the application of the testing instrument than oil. The pinning and scratching are less likely to occur with short file-strokes than with long ones.

When the surface has been made fairly true and smooth by draw-filing it should next be gone over with emery-cloth, say No. $^1/_2$. The

emery-cloth may be wrapped around the file or a straight piece of wood, and used the same as in draw-filing. The strokes, however, should be at right angles to those of the latter process. Changing the strokes again and using No. 0 or 00 emery-cloth, a still higher polish will be obtained. Oil should be used with the emery-cloth, both for fibrous and non-fibrous materials, the object being to give a polish which is not so likely to rust.

By using the smooth and dead-smooth files, the strokes of the latter being crosswise those of the former, and following this work with 0 and 00 emery-cloth or crocus-cloth, which should also be used with alternately changing strokes, a finish may be had which will satisfy the most exacting requirements.

It may be observed that *the average polished surface is merely a surface in which the scratches are very fine and very nearly parallel.* The latter point is quite important. If the polishing-marks run in all directions, the effect is not pleasing to the eye.

All that has been said with respect to draw-filing and polishing a surface which had been prepared for these processes by cross-filing will apply equally well to a planed surface. But the latter should not require the preliminary work of cross-filing. If, however, because of unskillful manipulation on the planer, cross-filing be required, nothing coarser than a second-cut file should be tolerated. It would be cheaper to replane the surface than consume too much time with the file.

Filing Broad Surfaces.—In filing a surface of such breadth that the ordinary file-handle would interfere with the strokes of the file, a special file-handle is employed. The best device of this character is that shown in Fig. 85. It is called a *surface file-holder.* The part

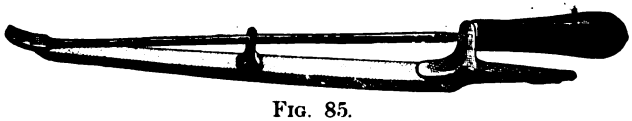

FIG. 85.

which fits over the tang is slightly dovetailed and also tapering, the tang being filed to correspond. The part at the point of the file is also slightly undercut. Both of these pieces clear the surface of the work. The handle is threaded to fit the rod which passes through the center and tang pieces. By screwing up the handle and adjusting the center-piece lengthwise, the *convexity of the file may be increased* at any point along its length.

A cheaper and much inferior surface file-holder is shown in Fig. 86.

It would be pertinent to inquire, how the draw-filing process could be applied to broad surfaces? In answer to this question it may be stated that draw-filing is not used by all mechanics, even for narrow work. In wide work it would be more convenient to use coarse emery-

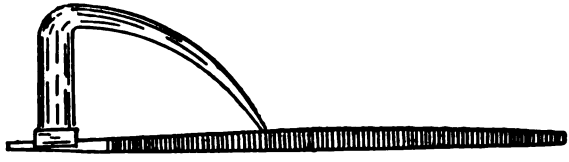

FIG. 86.

cloth on a thick block of wood, finishing with the finer grades. It will, however, require more preparatory work with the smooth file when emery-cloth is used instead of draw-filing.

Filing Curved Surfaces.—If the curve be exterior or convex, it will be difficult to file it without making flat spots. To obviate this the file must be given a rocking or circular sweep around the work, as illustrated in Fig. 87. In using emery-cloth, a strip of suitable width should

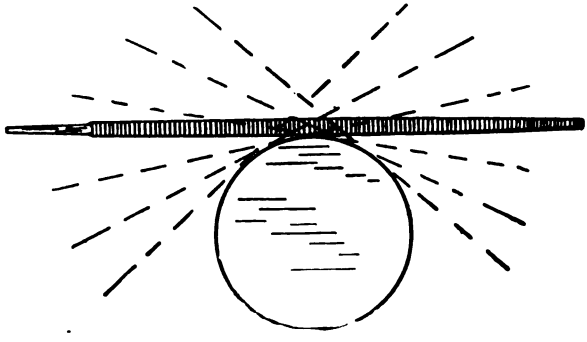

FIG. 87.

be wrapped partly around the curved surface, and with one hand on each end the cloth it should be wiped back and forth around the work in a kind of seesaw fashion.

Another method may be briefly given, as follows: Hollow out a block of soft wood to fit the curved surface, and after smearing the surface or the wood with oil and emery move the block in a circular path back and forth around the work until the required finish is attained.

In filing an interior curve like that of a pulley-bore the largest round or half-round file practicable should be used. The problem in this work is to enlarge or smooth the bore without making a series of small curves lengthwise the hole. To obviate this the file should be given a combined circular and longitudinal motion. The file must be kept from rocking lengthwise; otherwise the hole will be made larger at the ends than in the middle.

Curving Files for Special Work.—In filing the shallow recesses and curves peculiar to ornamental work—stove patterns, for instance—it may be necessary to use small *stub-files* such as are shown in Fig. 88. The handle or holder shown in connection with these samples is soldered to the stub and is called a *stub-file holder*. In the absence of such files it is permissible to bend an ordinary file to the required shape.

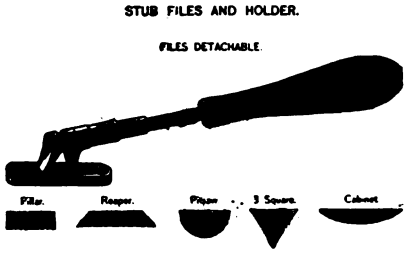

FIG. 88.

Filing a Rectangular Recess.—In filing a rectangular recess like that of a key-seat in a pulley the file is very likely to leave *small fillets in the two corners of the recess*. If the workman neglect to file *correspondingly rounded corners* on the detail which is to fit the recess, the detail, instead of fitting correctly, will touch only on the corners. The writer has often observed this fault in the work of beginners. When there is objection to rounding the corners of the key or other detail, the small fillets (so small as to be often overlooked) may be cut away with a fine half-round or three-cornered file.

Filing Lathe Work.—The principles covered in the preceding paragraphs of this chapter apply with some exceptions to rotating work. The first exception we note is that in general *only the finer cuts of files should be used*. If there is much metal to remove, it should be turned off with a lathe-tool. We notice, secondly, that instead of using our highest skill to prevent the rocking of the file, it is advantageous, though not essential, to give it a slightly rocking movement.

The grade or fineness of teeth of the file should be governed by the quality of the work. The smooth-cut flat files or second-cut mill-files are suitable for general lathe work, the dead-smooth file in flat, hand, or half-round shapes being used in exceptionally fine work. To obtain the best finish the file should be moved at right angles to the axis of the rotating piece with light uniform pressure. Each successive stroke

should advance a small fraction of an inch lengthwise the work until the total length is covered. In heavier filing, when such is permissible, the strokes may be inclined to the axis, the direction being changed back and forth to avoid filing the work in grooves.

Inasmuch as the work is moving toward the file, the novice concludes that the file may be held stationary. It is true that the file-strokes may be slower than in vise work, but holding the file still always causes rough and botched work.

Danger in Filing Rotating Work.—In filing close to the headstock of the lathe there is danger of getting the clothing or the file caught in the revolving chuck-plate or lathe-dog. Here is where the left-handed man has the advantage. His arms and, indeed, his whole body is farther away from the chuck. We sometimes gain the same advantage by running the lathe backward and standing on the back side. It is occasionally the case that work having some projecting part near the center of its length must be filed. The student is also cautioned against this source of danger.

Speed of the Work when Filing in the Lathe.—If the work be revolved too slowly, the effect will be to file it "out of round"; if too fast, the teeth of the file will wear too fast. The work should run about three times faster for filing than for turning.

The inexperienced and thoughtless workman will sometimes run the lathe the same number or revolutions in filing a 3″ shaft as in a shaft 1″ diameter. It should not be forgotten that the *cutting speed* for a given number of revolutions is *proportional to the diameter.* If the file heat up rapidly, the speed should be reduced.

Polishing in the Lathe.—In polishing with emery-cloth or crocus-cloth, either of these may be wrapped around the revolving work and moved back and forth lengthwise the work by hand. When giving the final polish No. 0 or 00 cloth should be used. This should be moved very slowly along the shaft, the object being to lay the polishing marks so close together and so regularly that they will scarcely be discernible. Some mechanics follow the emery-cloth with waste sprinkled with flour-emery. This gives a very bright appearance to brasswork, and also improves the looks of steel and other metals. The waste is held around the shaft by the hand.

To obtain a quick polish, but generally not so fine a finish, polishing-clamps may be used (see Fig. 89). These may be made of two pieces of soft pine about $1\frac{1}{2}$″ thick × $3\frac{1}{2}$″ wide × 24″ long. The pine sticks should be hinged together at one end with sole-leather. The opposite ends

should be trimmed with a draw-shave to make them more comfortable to the hands. About 3″ from the hinged ends emery and oil may be applied to the inner sides of the sticks. Now grip the revolving shaft or other detail between the clamps, and while applying pressure to the ends intended for the hands, move the clamps back and forth lengthwise the shaft until a satisfactory polish is obtained. Oil should be used in connection with the polishing materials, excepting possibly the waste.

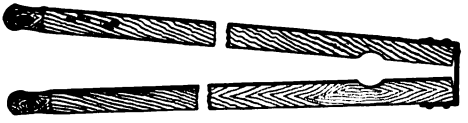

FIG. 89.

The File should not be Lifted.—The file should be held to the work during both forward and return strokes. This applies to vise work as well as lathe work. On the return stroke the pressure should be relieved and the file moved back quickly without cutting.

Care of Files. Cases in which New Files should not be Used.—The teeth of files are very brittle and easily broken, especially when the files are new. For this reason files should not be promiscuously mixed with other metal tools. They should be kept in some kind of rack or partitioned space, so that they cannot touch each other. For similar reasons a new file should not be used on a casting just from the foundry; that is, it should not be used to file the scale of such a casting, nor on a welded joint, nor on the edge of sheet metal, nor on a freshly chipped surface. In all such cases a *second-hand* or *discarded* file should first be used. In filing a chipped surface the projections may be flattened somewhat with the *edge* of a new file, if a second-hand file is not available. The teeth on the edge are not so easily broken, nor is this part of the file so much used as the face.

An old file does not readily take hold of brass and cast iron, and it is proper to start the new file on these and other cast metals, excepting chipped surfaces. After the extreme points of the teeth are dulled somewhat the file may be used on the fibrous materials, such as steel and wrought iron.

Oil may be removed from a file by filling the teeth with chalk, and then brushing the chalk out with a file-brush. The process may need to be repeated two or three times.

CHAPTER V

THE SURFACE-PLATE AND SCRAPER

Object of the Surface-plate. — A skilled workman can machine a plane surface so nearly true that it will be difficult to detect any error in the surface with a straight-edge,* and the work will be sufficiently accurate for most practical requirements. Nevertheless there will be minute errors in the surface which make it unsatisfactory for some purposes. The sliding surfaces of machine-tools, for instance, require to be more accurate than it is possible to make them by machinery. For detecting the minute errors a surface-plate is used.

Description of the Surface-plate. — The surface-plate is a cast-iron plate having one surface machined and scraped to a practically perfect

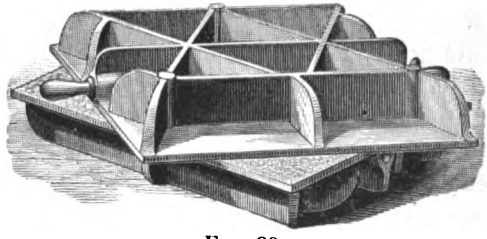

FIG. 90.

plane. Fig. 90 shows two surface-plates of the usual form. In this design they are made in sizes varying between $3\frac{1}{2}''\times4''$ and $36''\times68''$, the largest weighing more than 1000 lbs.

A surface-plate of large size should be very carefully and intelligently designed. The metal should be so distributed as to require the least weight consistent with accuracy. The plate should also be so designed that it would not be distorted by variations in temperature. When not in use the plate should be oiled to prevent rusting and kept in a wooden case.

* A kind of ruler for testing plane surfaces.

Using the Surface-plate.—In using the surface-plate a very thin coat of Venetian red, or red lead mixed with oil, is applied to the plate (preferably by hand). The plate is then moved back and forth over the work, or the work over the plate, when the prominent spots on the work surface will be marked with the coating. These spots are to be removed with the scraper, or scraper and file. It will depend on how nearly true the surface has been machined as to whether a file will be needed, but usually it will save time to file away most of the inequalities.

A Typical Scraper.—The illustrations in Fig. 91 show two views of a typical hand-scraper. It is shaped very much the same as a common file and it is often made from a high-grade thin file. It should be forged down to about $^1/_{16}''$ at the point and tapered back about $1^1/_2''$ to the

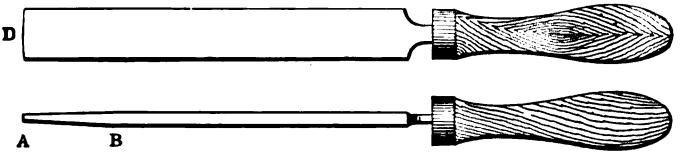

FIG. 91.

normal thickness at *B*, which thickness may be about $^3/_{16}''$. The width at the point may be about $^7/_8''$. The end *A* should be ground at right angles to the center line. Looking at the other view, the end should be slightly rounded as at *D*. If not thus rounded, the corners are likely to dig in and score the work.

False Economy in Making a Scraper of Cheap Steel. — Whether forged from a file or otherwise the scraper should be made of a *high grade of steel*, and very carefully tempered and oil-stoned. As it is not subjected to hammer-blows, the scraper will stand a much harder temper than a chisel. Steel makers and dealers are always glad to assist purchasers in selecting the grade of steel best adapted to any given purpose, and any effort at economy in the price of scraper-steel is likely to be more than offset in the time spent in grinding the scraper.

A Double-end Scraper.—The scraper shown in Fig. 91 requires a handle of the same shape as a file-handle. The total length of handle and scraper when the scraper is new may be 9 to 11 inches. But scrapers are often made double, so as to cut on both ends. This design is illustrated in Fig. 92. The thickness and width may be about the same as that of Fig. 91. As to the length, some mechanics prefer to have these scrapers made long enough to be gripped by both hands with-

out the right hand touching the unprotected end. The writer has not found this extra length necessary. If the scraper be made about 10″ long, and the upper end be covered with a small leather, wooden, or lead socket, it will give no trouble. Waste is sometimes used for this purpose. The curved shape at the middle of this scraper is *more ornamental than useful.* Unless the scraper be made quite long and grasped in the middle, the curves may be omitted.

FIG. 92.

FIG. 93.

Hooked Form of Scraper.—Fig. 93 shows the hooked scraper, which is preferred by some workmen for very fine and smooth scraping. The fact that this scraper has but one cutting edge, and therefore requires twice the oil-stoning and twice the number of visits to the emery-grinder, is sufficient to offset any other advantages imaginary or real it may possess.

Grasping the Scraper.—The "orthodox" method of grasping the scraper is shown in Fig. 94. It is used like the file, in that the pressure

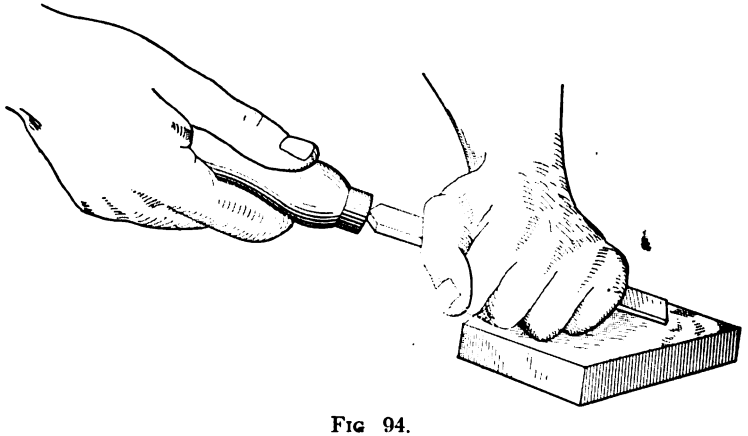

FIG 94.

should be applied during the forward stroke and relieved on the return.

Drawing the Temper in Grinding.—It sometimes occurs that a scraper will cut all right one day but fail the next, and the student will wonder what the trouble is. In most cases it will be found that the *temper* has been *neutralized by allowing the point* of the scraper *to become*

heated in grinding. The same precautions are necessary as were advised with respect to the chisel.

Causes of Chattering.—When a cutting-tool makes a surface having minute irregularities of a wavy appearance it is said to *chatter.* If a scraper like Fig. 91 be ground so that the end *A* vary much from right angles with the center line, one edge will be sharper than the other, but the sharper edge will be likely to cause chattering. Chattering is likely to occur, also, when a tool has too broad a bearing on the work. The scraper should be *held at an acute angle* with the work surface. If held too high, it will chatter. When necessary to hold it thus in order to make it cut, it should be sharpened.

Moving the scraper in *one unchanging direction* will also cause chattering. The proper method after first testing with surface-plate is to go over the work in short strokes of about $^1/_2$ to $^7/_8$ inch in one direction, and then apply the surface-plate again. Using the scraper the second time, it should be moved at right angles to the last strokes. The third application of the scraper may be in the same direction as the first, or midway between the angles of first and second. Continuing thus with surface-plate and scraper, the surface when completed will present a very pleasing appearance. An expert workman can by varying the direction of scraper-strokes produce various effects, somewhat resembling *checkerboard work.*

Precautions Against Wasting Time.—It is important to observe that *when the surface-plate is first applied* and touches only in a few spots *the scraper should be used quite vigorously.* As the surface approaches a true plane we use thinner coats of lead and apply the scraper more lightly, taking care to confine the scraping to the *exact points of contact.* Scraping is a very slow process at best, and if we scrape too lightly at first, when there is considerable metal to remove, it may take very much longer than necessary to do the work. The surface is considered sufficiently accurate for average requirements when it is marked all over in spots of $^1/_8$ to $^3/_8$ inch apart.

The work should be kept scrupulously free from particles of grit when using the surface-plate. An old cotton rag is better than waste for this purpose.

Importance of Scraping Machine-tools.—Scraping machine-slides and other similar work increases the area of contact between the sliding surfaces and greatly enhances their wearing qualities. Scraping is expensive, but it is essential to the life and accuracy of machine-tools, and its omission is an indication of cheapness and inferiority.

Scrapers for Interior Curves.—The scrapers mentioned above may

be used on convex as well as plane surfaces. For a concave surface they cannot be used advantageously. However, some mechanics manage to use these scrapers to a limited extent in scraping at right angles to the axis in a half-box bearing. A better scraper for the latter purpose is frequently made of a three-cornered file. Select such a file 6 or 8 inches long and grind the teeth off, making it quite pointed like Fig. 95. It should be used with a file-handle and grasped with both hands at the handle end. This scraper should cut on its side edges, the strokes being at right angles to its length.

FIG. 95.

A scraper for the same purpose may be made of a half-round file. The teeth should be ground off and the scraper moved at right angles to its length, as in the previous case. These scrapers should also be used with strokes at right angles to the axis of the bearing. A half-round file ground on its end may be used to scrape *lengthwise* the axis of a bearing. It will be understood that the purpose of scraping a bearing is to bring it to a fit with its shaft.

Special Form of Scraper.—Fig. 96 shows a special form of scraper sometimes used in scraping broad surfaces. The blade is several times

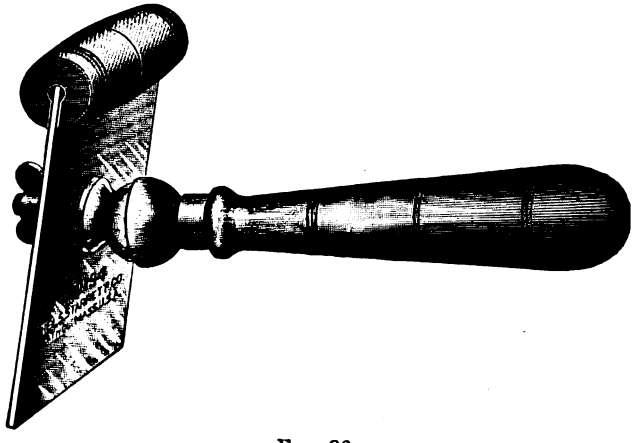

FIG. 96.

wider than in the common scraper, and to avoid chattering it is used with a draw-stroke; that is to say, it cuts while being drawn toward the operator. The cut shows a tool for scraping wood, but by using the proper quality of steel in the blade it may be, and is, used in the machine-shop for metal-work.

A home-made scraper of this kind may be improvised by inserting a section of file with teeth ground off, in a slot milled lengthwise a piece of $^{7}/_{8}$" round steel. A $^{3}/_{8}$- or $^{1}/_{2}$-inch rod driven into a hole drilled in the round steel and sharpened on opposite end to fit a file-handle completes the scraper. The angle formed by the rod and blade should be at least 100°. These scrapers are not adapted to fine fitting, such as lathe-rests, etc.

Using Emery-cloth in Connection with the Scraper.—Emery-paper is used by some workmen for the finishing touches on a scraped surface. A stick of hard wood is whittled to about $^{1}/_{4}$" or $^{3}/_{8}$" square at point, and the finest emery-cloth wrapped around this point. The stick is applied to the work just the same as the scraper of Fig. 91.

Ornamental Finish with Emery.—Small work is sometimes ornamented at the shops of the Michigan Agricultural College (the writer is not aware as to whether this process is used in other shops) as follows: A stick of wood is fitted to the chuck of the sensitive drill, and flour-emery and oil are applied to the work or to the lower end of the stick, which should be about $^{5}/_{16}$" diameter and cut off square. Now, placing the work upon the drill-platen, the revolving stick is brought to bear *very lightly* upon the surface. The stick is next lifted by the lever and the work moved about $^{5}/_{16}$" and the second spot polished. This process is repeated until the surface is covered with the circular spots, the direction of these spots with respect to the sides of the work being regulated to suit the fancy. The surface to be ornamented should be given a *flat* polish with emery-paper or crocus-cloth preceding the ornamental finish, and during the latter the drilling-machine should run at its *highest* speed. The contact of the revolving stick should, as stated, be very light; otherwise it will make appreciable indentations in the work.

This ornamental finish may be made at the bench by using a breast-drill. The writer has also produced various ornamental effects by going over a polished surface with emery-paper wrapped around a stick, the latter being moved in a curling or wavy path.

Using the Scraper at the Lathe.—In lathe work the scraper is supported upon a rest very much the same as the chisel is supported in wood-turning. The scraper shown in Fig. 91 is adaped to lathe work as well as vise work. In order to approach the face-plate or a lathe-dog more conveniently it is sometimes ground to an angle, as at *A* in Fig. 97. This scraper can be used for smoothing plain cylinders, such as cast-iron pulleys, etc., and also radial-face work. It may be used

on similar surfaces in brass. Scrapers are used with greater advantage, however, on lathe work of irregular contour, ornamental work, filleting, etc. On work of this character the cutting end or point of the scraper is made in various shapes to suit the required curve. The most common are semicircular on the end, and the shop in which scrapers are much used may have these of radii varying from $^1/_8$ to $^3/_4$ inch.

In Fig. 97 at *B* is shown a scraper as applied in smoothing out a fillet. If the plain face between the fillets has been previously brought to its final finish, some skill will be required to avoid cutting into this plain face. For the finishing touches in the fillet the scraper should be brought up to the work, as at *B* in Fig. 98, and while barely missing the plain surface it should be steadily advanced into the fillet. During this operation the forefinger of the right hand, being under the scraper at the dot *F*, and in contact with the rest *R*, prevents the scraper from *digging into* the face while it is moved toward the fillet. At this time the thumb of the right hand is on top of the scraper at dot *F*, while the left hand supports the other end of the scraper. This may appear to be a sort of left-handed operation, but where the conditions favor it the position of the two hands may be reversed. Of course it will be unnecessary to observe any cast-iron rules in these small matters, but the beginner generally needs some definite directions to start with, and later he may adopt such minor modifications as suit his convenience, the main consideration being to *get results*.

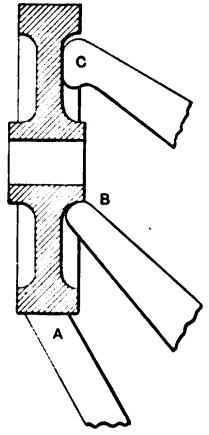

FIG. 97.

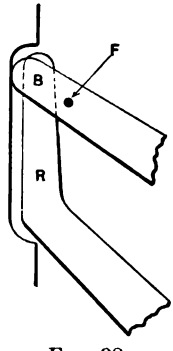

FIG. 98.

It will be noticed that the *rest R* is quite *close* to the *work*. This is important, and such rests may be forged to suit various shapes of work. Moving the rest too far from the work is likely to cause *chattering*. Chattering may sometimes be prevented by placing a piece of leather or other such material between the scraper and the rest. At other times it is necessary to lessen the line of contact of scraper with the work. In fillets and curved work generally, the experienced workman will vary the point of contact by gently moving the handle end of the scraper in an arc of a circle.

A scraper shaped like *C*, Fig. 97, may be used for the fillets and also for the flat surface between the fillets.

The scraper is not used nearly so much in modern practice, except by amateurs, as it was fifty years ago. Curved surfaces are shaped very largely by special tools called *forming-tools*. These tools are made with cutting edges of the same shape as the curve.

The Graver.—If we take a square file about 8″ long and grind the teeth off and then grind the end to an angle of about 45°, we shall have a graver. Gravers and other hand-tools, formerly used to a considerable extent on wrought iron and steel work, are gradually being superseded by more modern appliances.

The cutting edge of a scraper, whether used at the vise or lathe, should be moistened with water or oil when scraping wrought iron and steel.

Generally the scraper when used in the lathe should be followed by emery-cloth, or a file and then emery-cloth.

All such tools as scrapers, files, etc., used on rotating work should have *handles*. Otherwise if the tool get caught or struck by the work, its pointed tang may be forced into the flesh of the operator.

Scrapers need to be oil-stoned often. A scraper like that shown in Fig. 91 should be stoned mainly on the end, the scraper being held perpendicular to the stone and moved in a circular path. The scraper may also be stoned on the two faces. Oil should be used on the stone, but the latter should not be allowed to become gummy.

CHAPTER VI.

THE VISE AND SOME VISE ACCESSORIES

In the five preceding chapters we have dealt very largely with tools and methods connected with vise work. It is proper to give some attention to the vise itself. There are a great many kinds of vises in use, and inventors have exercised considerable ingenuity in the endeavor to combine in one vise the good features of all. The problem is in part a commercial one; the new vise should cost but little more than the simpler patterns.

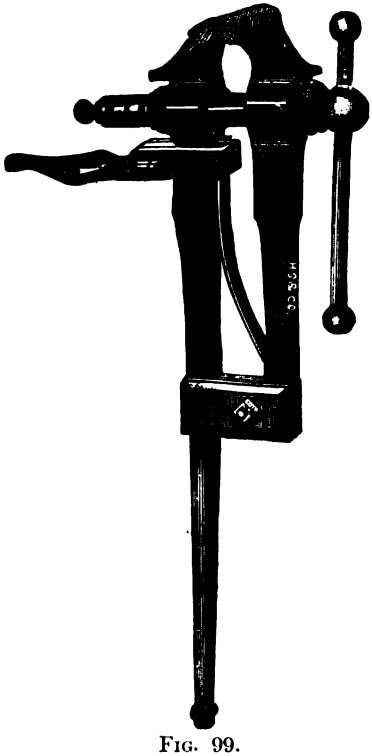

Fig. 99.

The Solid-box Vise.—Fig. 99 shows a vise which is familiar to all. It is one of the older styles, which was doubtless used by the "village blacksmith" whom Longfellow has immortalized. This vise still holds its place among its more modern competitors, its merit being strength and rigidity, due to its having a support on the floor as well as on the bench. The objection against the vise, that its jaws are not parallel in vertical planes when opened wide, has been overcome by providing a second screw below the main screw. This second screw is connected with the main screw by sprocket-chain and wheels, and its operation will be understood by every boy who has fallen off a bicycle. The vise shown in the

illustration is known as the *solid-box vise*. It is not provided with the sprocket-chain arrangement.

Parallel Vise.—The manufacturer of the vise shown in Fig. 100 has been pleased to call it the "Bulldog" parallel vise. The latter

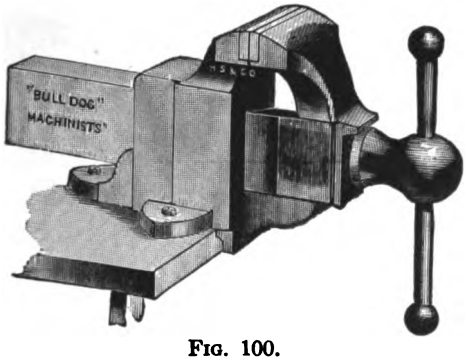

FIG. 100.

half of the designation, however, is the technical term for vises of this character. Parallel vises of the cheaper designs open by lever and screw on the same principle as that of Fig. 99.

Parallel Swivel Vise.—When the vise of Fig. 100 is made to swivel on its base it is called a parallel swivel vise. Fig. 101 shows this style.

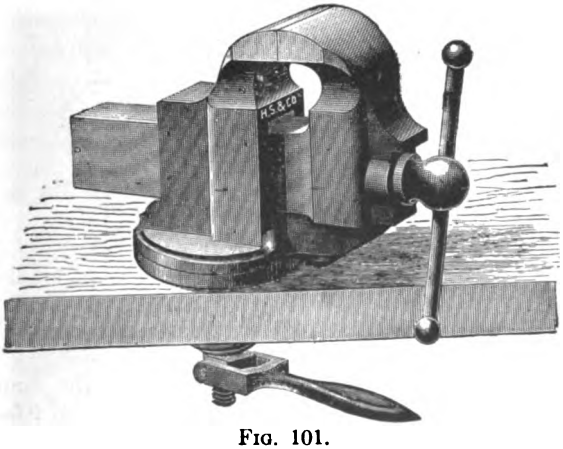

FIG. 101.

The advantage of being able to swing the work to any angle in a horizontal plane will appeal to every experienced mechanic.

In Fig. 102 we have a vise which swivels on its base and which also

has one swivel jaw. This latter provision is very convenient in gripping tapering work.

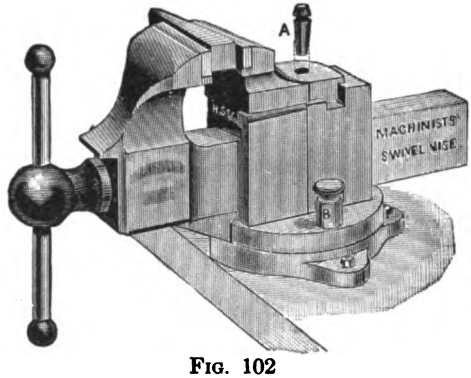

FIG. 102

Combination Pipe-vise.—A shop in which a limited amount of steam-fitting is likely to be done must have at least one vise adapted to this work. The "swivel combination pipe-vise" of Fig. 103 can be used

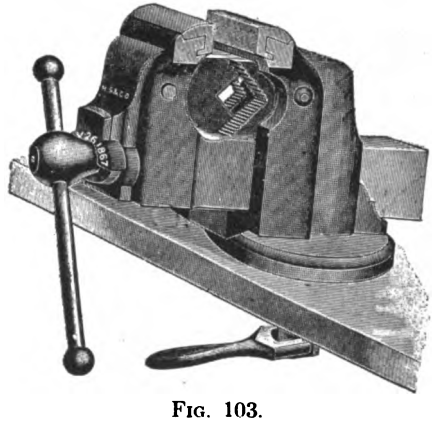

FIG. 103.

for pipe as well as for general work. To facilitate threading pipe with dies this vise should be placed at the end of the bench.

Quick-acting Vise.—There is a class of vises on the market known as "quick-acting" or "rapid" vises. Some of these are "fearfully and wonderfully made." The quick closing of the jaws is, of course, desirable, but this feature should not be obtained at the expense of durability and solidity. In selecting such a vise one should choose a design which has the least number of parts consistent with the necessities of the case.

Universal Vise.—In Fig. 104 is shown the "Emmert Universal Vise." The writer has not examined this design, but the manufacturers say: "It will turn in any position and hold work so that you can work naturally, without bending or twisting the body."

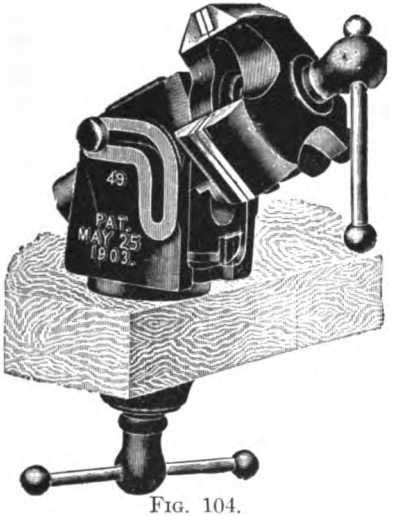

FIG. 104.

Hand- and Pin-vises.—The hand-vise is a very convenient adjunct to the stationary vise. Fig. 105 shows one of typical design. It is used in filing pins and small pieces which require more delicate manipulation than is possible with the large vise.

FIG. 105.

The pin-vise is used almost exclusively for pins and other small cylindrical details. The style shown in Fig. 106 is constructed on the

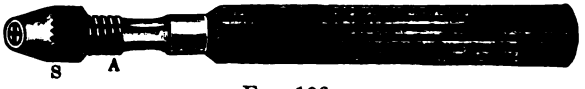

FIG. 106.

same principle as a certain class of lathe-chucks. The internally threaded and tapered sleeve *S* screws on the end of *A*, which is threaded and tapered to fit *S*. *A* is drilled and sawed about one fourth its length as shown, and tightening or screwing up *S* causes the four jaws to close and grip a pin or other detail placed in the drilled hole.

In filing such work as small pins in the pin-vise, the latter is held in the left hand, and the end of the pin is supported on top of the stationary vise, or between its jaws, which are opened about two thirds the diameter of the pin. The pin is rotated back and forth by a movement of the wrist, and a small file is applied during the backward motion.

Vise-jaws with Detachable Faces.—The best designs of stationary vises have detachable steel faces on the jaws. These faces are serrated or notched somewhat like a double-cut file, the object being to more securely hold work subjected to heavy chipping, etc. They are made detachable in order that the manufacturer may duplicate the faces instead of the whole vise in case of breakage.

Vise-clamps.—In gripping rough castings, forgings, etc., the steel faces mentioned are brought into direct contact with the work. But to avoid marring finished work, vise-clamps are interposed between the work and the steel faces. Copper clamps are used more than any other kind for this purpose. Sheet copper about $^1/_{16}$″ thick will answer. Cut out two pieces, each equal in width to the vise-jaws and about 3″ long. Heat them red-hot and cool in water. This will anneal or soften the copper. Clamp the two pieces tightly in the vise with the lower edges even with the lower edges of the vise-jaws. Separate them at the top and bend each over its vise-jaw, hammering the pieces down to closely fit the upper surface of the vise-jaws.

In order to grip thin work, the upper edges of the clamps answering to the upper edges of the vise-jaws should be square and sharply defined. If not satisfactory in this respect, heat and pound down (after cooling) the copper pieces again, giving special attention to the upper edges.

The usage to which the clamps are subjected tends to harden them. For this reason they should occasionally be reannealed.

Lead Clamps.—Lead clamps are very desirable for gripping small pieces which, because of their limited contact, are more likely to be slightly bruised or mashed. With lead clamps *a screw* may be held in the vise without spoiling the thread. Fig. 107 shows one of these clamps and a mold for making them.

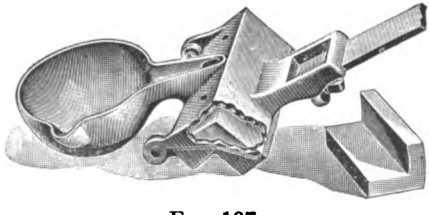

FIG. 107.

Both the lead and copper clamps are likely to become imbedded with grit and small particles of steel. On this account some mechanics use leather clamps for very highly polished and delicate work. To make these clamps, cut out

two pieces of leather of the right size, and cut them half-way through on the line where they are bent over the vise-jaws

Another Method of Holding Screws.—A threaded bolt or similar detail may be held in the vise without clamps by screwing the thread into a nut which has been sawed through on one side. The pressure of the vise-jaws will cause the nut to tightly grip the thread without injuring it.

The Hack-saw.—The novice sometimes expresses surprise that the mechanic can "saw metal as he saws wood." Fearing, therefore, that this handy tool may be overlooked by the beginner in purchasing his "kit," we shall mention it in this connection. The hack-saw frame shown in Fig. 108 will take blades from 6 to 12 inches in length, and

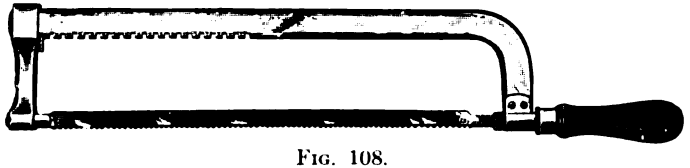

Fig. 108.

it will hold the blades in four different angles with respect to the frame. Formerly hack-saw blades were made to be filed like a carpenter's saw, but these have been very generally superseded by the tempered blades. The latter are too hard to be filed and too cheap to make it pay to file them. The average length can be purchased for about 70 cents per dozen. After one has become accustomed to the use of a hack-saw he regards it as an almost indispensable tool in connection with vise work.

Pliers.—This is another very useful tool; but there are so many different designs that it is difficult to settle upon an illustration. Fig. 109

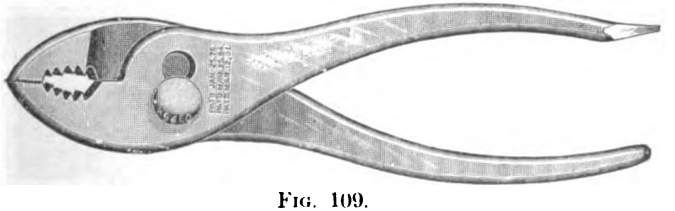

Fig. 109.

shows a tool which suits the proverbial "jack-at-all-trades." It combines in a small compass flat-nose pliers, gas-pliers, wire-cutter, and screw-driver. "By a quarter-turn of the handle, and sliding it from one hole to the other, it changes from the size of a gas-burner to $^3/_4$" pipe, or from $^3/_{16}$" to 1 inch round or square."

CHAPTER VII

DRILLING-MACHINES

Ratchet-drills.—The term drill, which primarily means a tool for originating and enlarging holes, is often used to denote the machine by which the tool is driven. Thus we have sensitive drills, radial drills, gang drills, etc., all of which machines are described in this chapter.

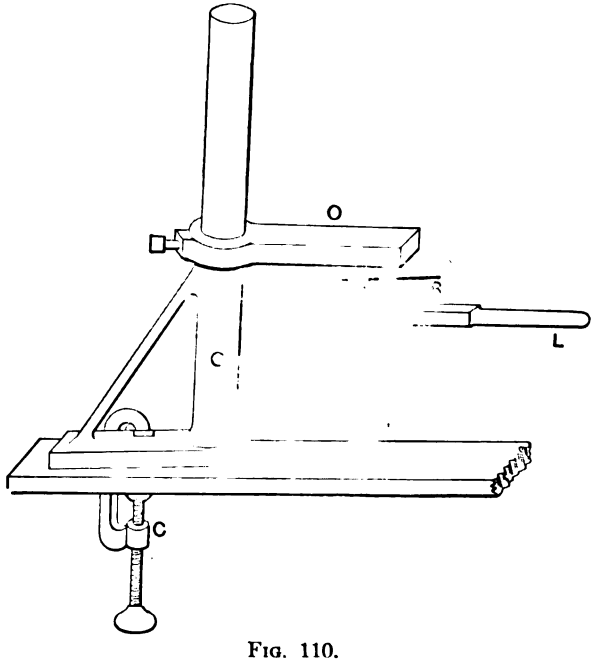

FIG. 110.

The simplest form of drilling-machine is the *ratchet*-drill. This, in connection with its brace, is shown in Fig. 110. The device marked *D* is the ratchet-drill, the brace, which is called the "old man," being marked *O*. *C*, *D* 1, and *W* represent respectively a clamp for holding

the brace, the drill, and the work. This ratchet-drill is operated by hand by means of the lever *L*, and is fed to the work by frequent slight movements of the small rod *R*. *R* turns a small screw which has a conical point fitting into an indentation in *O*, the thread end of the screw being fitted to a tapped hole in the head of *D*.

D 1 is caused to rotate with *L* by a pawl and ratchet, through about 180° for each stroke. During the return stroke of *L*, *D* 1 remains stationary. The pawl and ratchet are more clearly shown in Fig. 111 at *P*.

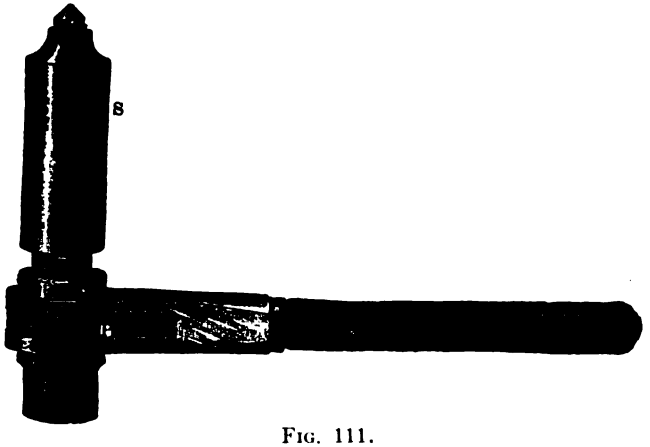

FIG. 111.

In this figure the feed-screw is hid, being covered by the sleeve *S* by which the drill is fed by the grip of the hand.

In some ratchet-drills the drill is rotated during both the forward and reverse strokes of the lever. With such a machine the drilling can, of course, be done much faster. Automatic feed mechanism is provided in the higher-priced machines.

The Breast-drill. — This machine is used for the same purpose as the ratchet-drill, viz., for drilling odd holes in work which cannot conveniently be taken to the power-drill. Fig 112 shows a typical breast-drill. The drill is held in a chuck at *E*, the pressure being applied by the breast at *B*. The handle *H* rotates the drill while *I* is held in the left hand to steady the machine. This machine may be changed from fast to slow speed by turning the thumb-screw at *A*. It will not drill as large holes as the ratchet-drill, $^1/_2''$ being about the largest. One could not drill many $^1/_2''$ holes before experiencing soreness of the breast.

The Fifield Drilling Attachment.—Figs. 113 and 114 show a very handy drill which is operated in connection with a common carpenter's

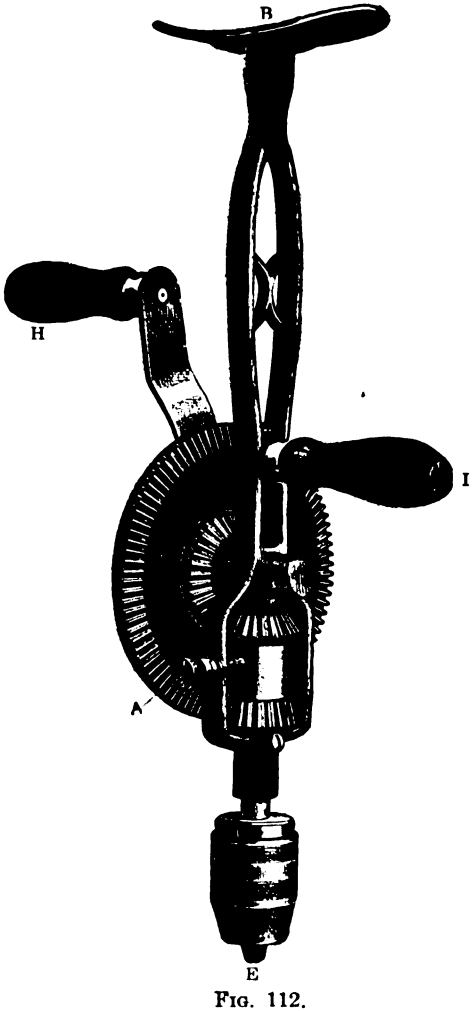

FIG. 112.

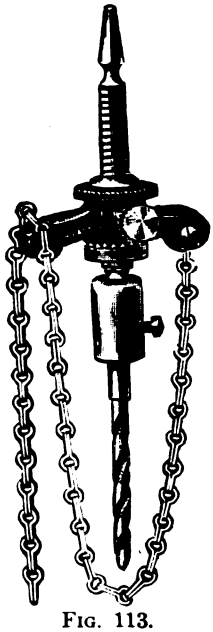

FIG. 113.

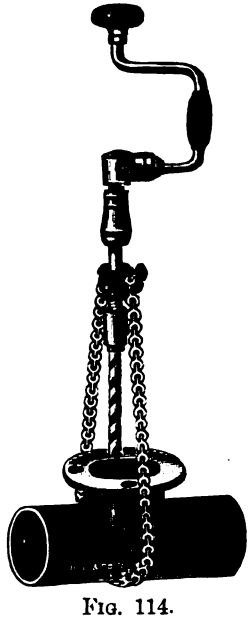

FIG. 114.

brace, the drill being held to the work by a chain. This device has automatic feed and ball bearings, and for drilling holes up to $^3/_4''$ diameter it is much in demand by machinists and other metal-workers.

Portable Drill.—The portable drill, Fig. 115, is designed to be driven from the line-shaft or other power mechanism, and yet it may be moved

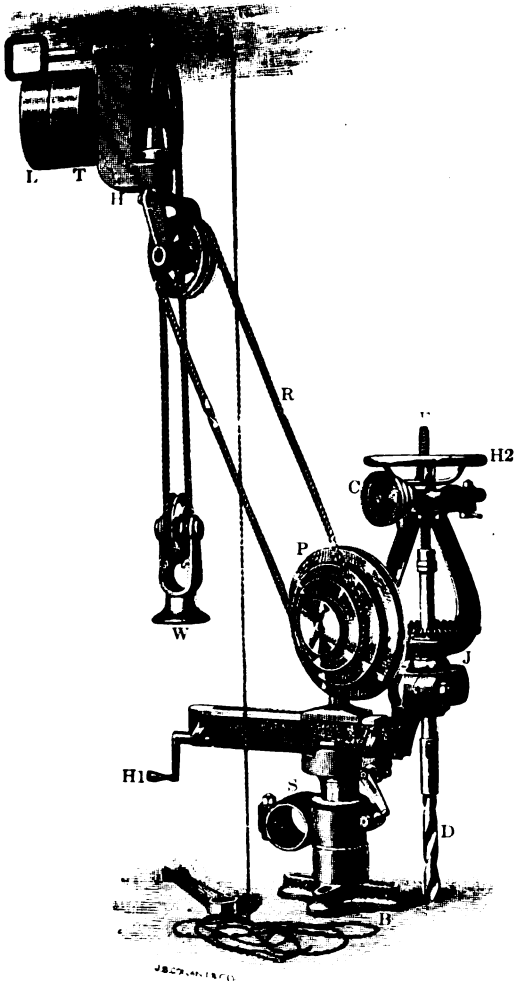

FIG. 115.

about independently of the latter. It is driven by a belt running on the tight and loose pulleys T and L, and is designed to be used mainly in the erecting-room of the machine-shop.

In using this machine the hanger H is fastened near the main shaft, and the drilling-machine secured to the work by bolts passing through the base B. The rope R, which runs over the pulley P, is made in sections to admit of the machine being operated at various distances from the hanger H. The machine has universal adjustments by means of the ball joint J, handle H 1, and sockets S. Having adjusted the machine so that the drill D is in position for the first hole, a number of other holes may be drilled without removing the base B. Tension on the rope is maintained by a weight at W, and the drill is fed by hand-wheel H 2.

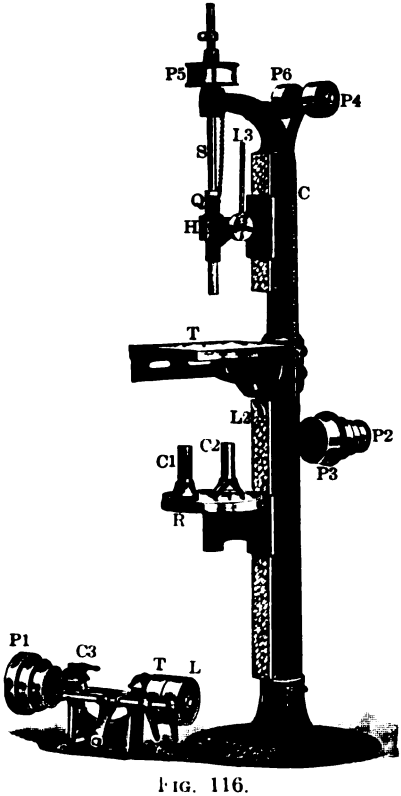

FIG. 116.

This machine has automatic feed also. For this purpose a cone-pulley hid behind P is belted to the upper cone C. The latter operates a worm and worm-wheel, which in turn actuate a feed-nut on screw F.

Portable power-machines are made in various designs, some of which are smaller than the one above described. The Stowe flexible shaft, used in dental work, is also employed in connection with portable drills.

The Sensitive Drill.—This machine, a good example of which is shown in Fig. 116, is a stationary power-drill, designed for very small holes. It is fed by hand, and it is made very light and sensitive, so that any undue strain on a small drill may be felt through the lever L 3 by which the drill is fed. The object of this is to prevent breaking the drills.

The Spindle S is counterbalanced by a weight suspended in the hollow column C. The head H carries a quill or sleeve Q in which the lower end of the drill-spindle is journaled, the upper end being journaled in the frame. The sleeve, and with it the spindle, is fed to the work by means of a rack-and-pinion movement. The pinion

(small gear) is on the same shaft with the feed-lever, the rack being secured to the sleeve. The head is adjustable vertically.

The Table *T* is designed to be tilted to an angle, and to swing around the column to bring the work in position for drilling holes in different positions. It is clamped by the lever *L* 2. The round table *R* is adjustable vertically, and may be lifted out of its socket and either *C* 1 or *C* 2 inserted. The first of these is designed to support the lower end of shafts, etc., while drilling centers for lathe work; the other is used as a rest for cylindrical work when the same is to be drilled at right angles to its axis.

The machine is driven by the counter-shaft *C* 3. It requires three belts. The first runs between the shop line-shaft and the tight and loose pulleys *T* and *L*. The second connects the cone pulley *P* 1 with a similar cone, *P* 2. The third belt runs over the pulleys *P* 3, *P* 4, *P* 5, and *P* 6, and thus operates the spindle *S* which carries the drill. When the machine is idle the main belt runs on the loose pulley *L*. To start the machine the belt is shifted to the tight pulley *T* by a suitable lever.

These machines are made with any number of spindles up to twenty.

Sensitive Friction-drill.—The drill illustrated in Fig. 116 has three changes of speed by cone pulleys. Fig. 117 shows a machine designed for the same class of work, but it has no cone pulleys of the ordinary type, the spindle speed being changed by moving the friction pulley *P* nearer to or farther from the center of the driving-cone *D*. The friction pulley is in contact with both of the cones *D* and *D* 1, and *D*, being driven by the belt *B*, transmits motion to *D* 1. *P* is supported by the yoke which slides and swings on shaft *S*, and is moved to or from the center of *D* by the knob *K*. The driving-cone *D* may be adjusted vertically to increase its friction on *P*.

Back-geared Drill.—The upright drill shown in Figs. 118 and 119 is designed for much heavier work than the sensitive drills. The frame is a great deal stronger and the driving mechanism is much more powerful. The spindle *S* is driven by a belt connecting the cone pulleys *P*, *P* 1, and by the bevel gears *G*. When the back gears *G* 2 and *G* 3 (Fig. 119) are brought into mesh with *G* 1 and *G* 4 the spindle speed is reduced to such an extent that the fastest speed "in gear" is slower than the slowest speed "out of gear." Thus we have four speeds (due to the four steps on the cone pulley) "out of gear," and four different speeds "in gear," making eight speeds in all. These speeds should be in *geometrical progression.*

The operation of the back gear is as follows: The gear G 1 is secured to the pulley P, and gear and pulley together turn freely on the shaft

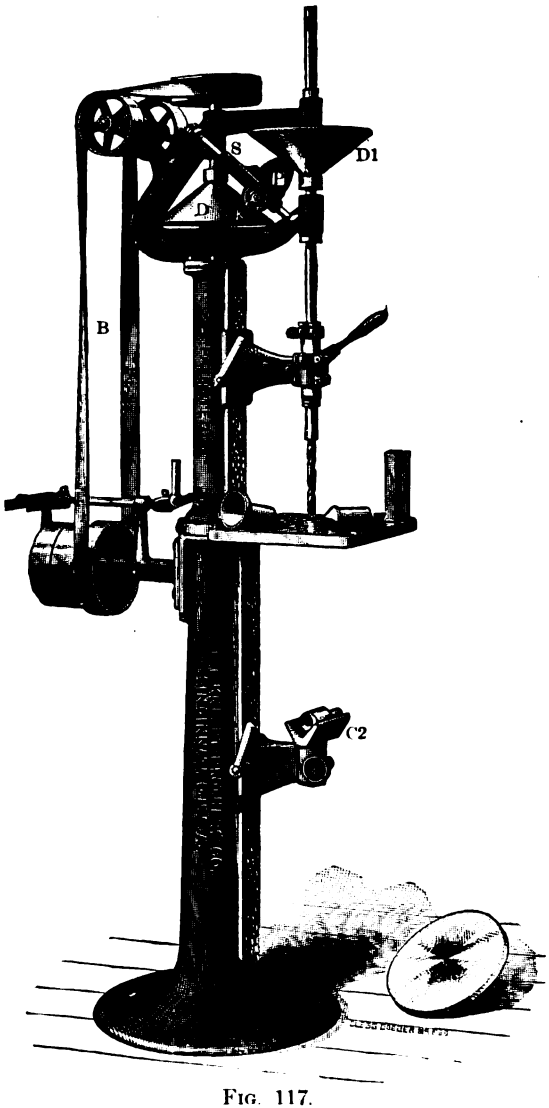

FIG. 117.

S 1, and may turn at a different speed from the latter. C is a clutch having teeth on the right-hand end designed to engage with mating

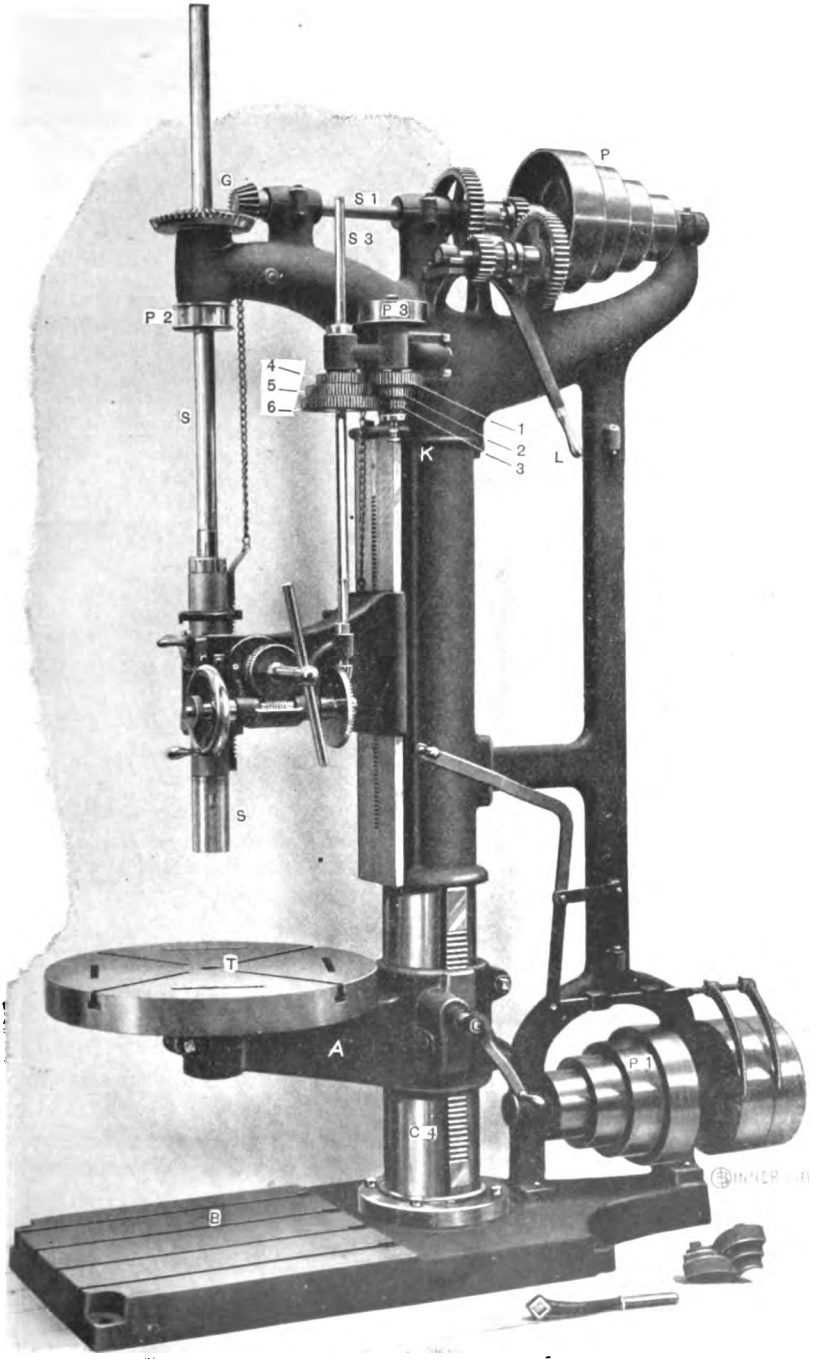

Fig 118

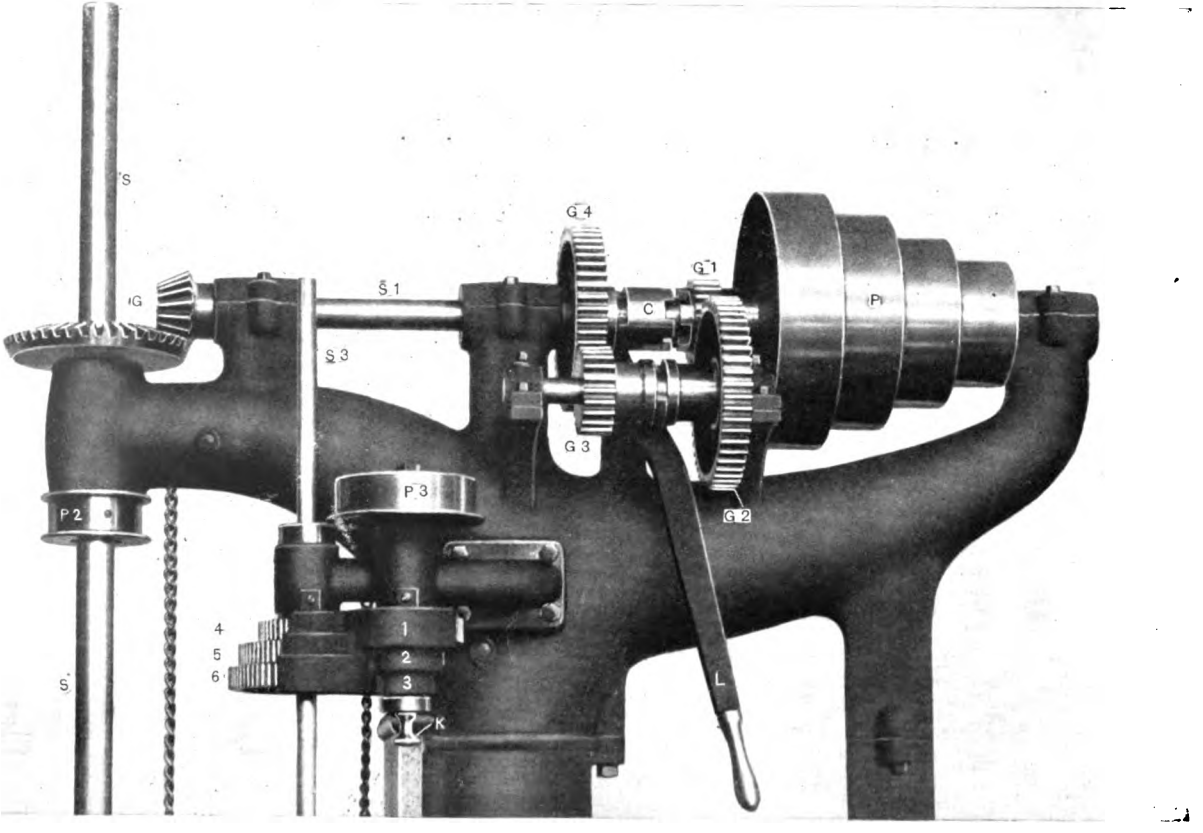

Fig 119

teeth on the gear $G\,1$ as shown. This clutch is connected to the shaft $S\,1$ by a key which causes the clutch to turn with the shaft, but leaves it free to be moved endwise. Gears $G\,2$ and $G\,3$ are cast integral, being joined together by a sleeve in the center of which a groove is turned to receive a U-shaped shifter pivoted in the lever L. This lever has a similar connection with the clutch C, and it is fulcrumed on the frame below the gears. If the lever be moved toward the left, it will cause clutch C to engage with $G\,1$ and at the same time move the gears $G\,2$ and $G\,3$ to the left, disengaging them from $G\,1$ and $G\,4$. If the lever be moved toward the right, it will bring both the clutch and gears to the position shown in the figure, which is the "in-gear" position for the back gears. If now pulley P be caused to revolve, it will turn at a ratio with shaft $S\,1$ depending on the ratio of $\frac{G\,2}{G\,1}$ multiplied by $\frac{G\,4}{G\,3}$, $G\,4$ being tightly keyed to $S\,1$. Assuming that $G\,1$ has 20 teeth, $G\,2$ 40 teeth, $G\,3$ 20 teeth, and $G\,4$ 40 teeth, then the ratio of revolutions of the cone pulley to the revolutions of shaft $S\,1$ will equal $\frac{40}{20}$ multiplied by $\frac{40}{20}$ equals 4. When clutch C is in engagement with $G\,1$, the back gears being out of gear, shaft $S\,1$ will be turned directly by the cone pulley, and the ratio will be 1 to 1. This ratio is suitable for drilling small holes, and the ratio due to the engagement of the back gears is suitable for the larger work. The gain in power is in accordance with the well-established law that (other things being equal) power is proportional to speed. However, the source of this *power* is *not in the machine*, but in the boiler-furnace.

Feed Gearing.—On the spindle S is a pulley $P\,2$ having belt connection with the pulley $P\,3$. On the lower end of the shaft $S\,2$ (Fig. 118), to which $P\,3$ is keyed, are three spur-gears numbered 1, 2, and 3. Either of these gears may be caused to revolve with the pulley $P\,3$ by a sliding key, which key is moved by the knob K. Keyed to the feed-shaft $S\,3$ are three other gears, numbered 4, 5, and 6, meshing with the first three. When the sliding key is in the gear No. 1, it causes that gear to revolve with the shaft $S\,2$, and motion is thereby transmitted to gear No. 4 on shaft $S\,3$, the number of revolutions of No. 4 depending upon the ratio of the diameter of No. 1 to the diameter of No. 4. At the same time the other two gears on $S\,3$ revolve, carrying the two mating gears on shaft $S\,2$ with them, but as the sliding key at this time has no connection with these two gears they merely

revolve *idly* on the shaft S 2. If the sliding key be moved so as to connect gear No. 2 to the shaft S 2, the feed-shaft will be caused to revolve at a speed depending on the ratio of the diameter of gear No. 2 to gear No. 5 on shaft S 3. The other two gears on shaft S 2 will revolve idly, and so on with the third pair of gears. Thus we obtain three different speeds of the shaft S 3 and *feeds* of the spindle S, as will be shown later.

On the lower end of the shaft S 3, Fig. 120, is a bevel pinion operating the worm-shaft and worm W by means of the bevel-gear G 6. The worm W operates the worm-wheel W 1, and on the shaft same with W 1 is a small gear meshing into the rack R, which is bolted to the quill Q. The quill Q does not turn in the head H, but is fed vertically at three different rates by the train of mechanism just outlined. The spindle S revolves in the quill Q and is forced by the collars C 1 and C 2 to follow the vertical movement of the quill.

The bevel-gear G 6 is not rigidly connected to the worm-shaft W, but is caused to turn with the latter by tightening the knurled nut N. This nut screws on a small shaft passing through the center of the worm-shaft, and on the other end of the small shaft is a friction-clutch designed to engage with a friction-clutch on the bevel-gear G 6.

Automatic Stop.—On the quill Q is a movable collar C 3 which may be tightened in any position on the quill. If, when the machine is in operation, the nut N be tightened, it will set in motion the bevel-gear G 6, and with it the intervening mechanism, including the quill Q. As the latter feeds downward it engages with the trip T, disengaging the latch L 1 from the lever L 2. This lever is so connected to the worm-bracket that when the lever is disengaged, it permits the worm W to drop out of mesh with the worm-wheel W 1. Thus the downward feed of the spindle S may be *automatically* stopped at any required depth, the quill Q being graduated for adjustment of the collar C 3.

Hand-feed—Quick Return.—The above description of Fig. 120 has reference to the automatic feed of the drill-spindle S. By slackening the nut N the spindle may be fed by hand by the hand-wheel H. After drilling a hole the spindle may be quickly returned by tripping the lever L 2 and turning the lever L 3.

Vertical Adjustment of Head.—The head H 1 may be adjusted and clamped in any position on the vertical face F.

Table Adjustment.—Work may be clamped to the table T or to the base B, Fig. 118. The table is supported on the arm A and may be revolved around the column C 4 and adjusted vertically on the column.

The table may also be revolved on its own axis. These adjustments facilitate drilling holes in different positions and in different heights of

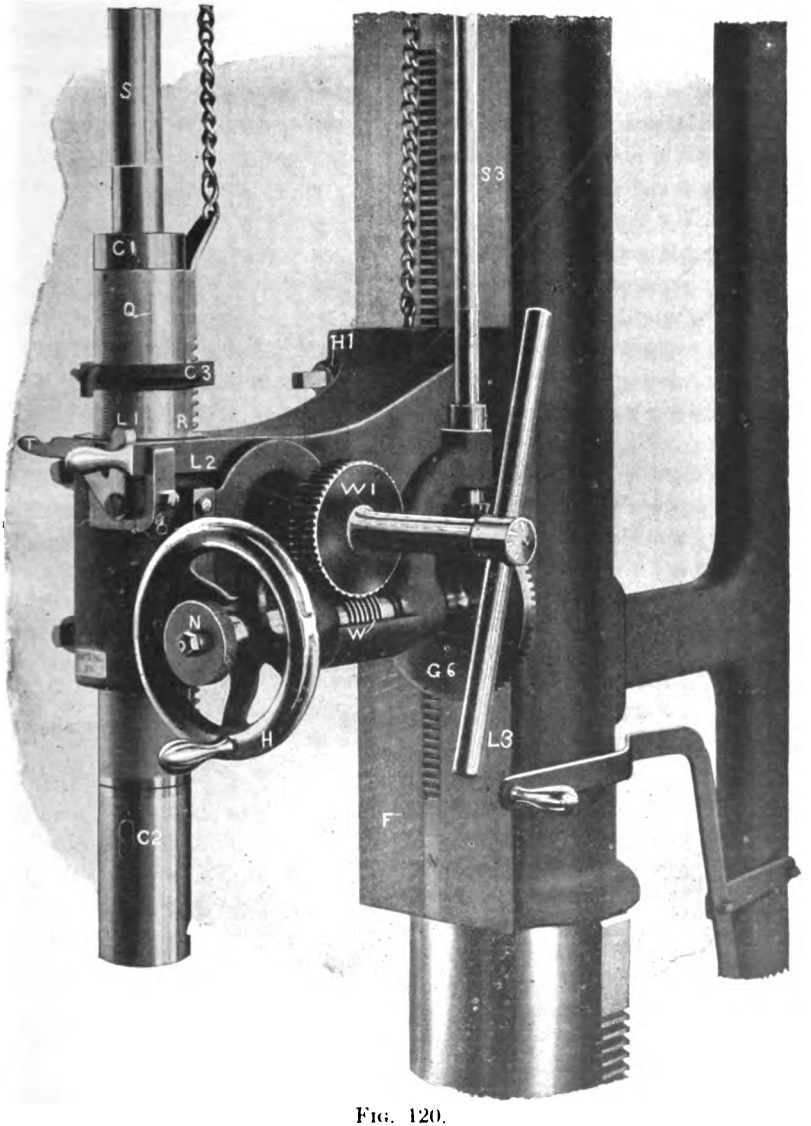

FIG. 120.

work. Thus having clamped a piece of work to the table *T*, holes may be drilled in any position within the circumference of the table without

unclamping the work. The base has no such adjustments, and consequently work held on the base must be readjusted for holes in different positions.

RADIAL DRILLS

General Description. — Fig. 121 shows a perspective view of a radial drill, so called from the long radial arm common to all machines of this class; and Figs. 122–7 show auxiliary views of the same machine. Similar reference-letters refer to similar parts throughout the several

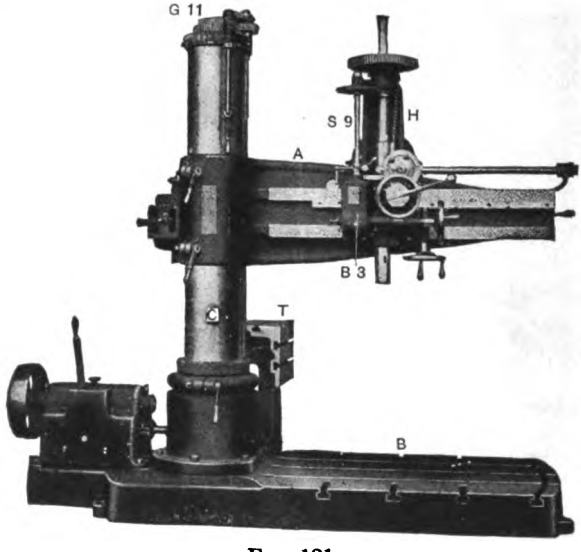

FIG. 121.

views. Referring to the perspective view, the base B, table T, column C, arm A, and head H comprise the principal members of the machine. The column C, carrying the arm A, swings around the stump S (Fig. 123) through a complete circle when the machine is driven from below, and through about 340° when driven from above. In the latter case the movement of the arm is limited only by the driving-belt. The head H (Fig. 121) slides on the planed ways of the arm A, and with the arm may be raised and lowered on the column for different heights of work. This vertical movement of the arm is effected by a shaft within the column, in connection with gears G 11 on top of the column. These gears operate a screw S 1 passing through a threaded nut in the arm A, as shown in Fig. 124. This mechanism for raising the arm is operated by a lever within easy reach of the workman.

Arrangement of the Driving-shafts. — The shafting between the driving-pulley and drill-spindle in a radial drill necessarily follows a rather circuitous route. Unless the shafting be amply large there will be a considerable angle of torsion between these two points. This shafting is mostly hid in Fig. 121, but it may be traced by the aid of Figs. 122, 123, 124, and 125. Thus, starting at the pulley-shaft *S* 3 in Fig. 122, connection is made between this and shaft *S* 4 by the four pairs of gears

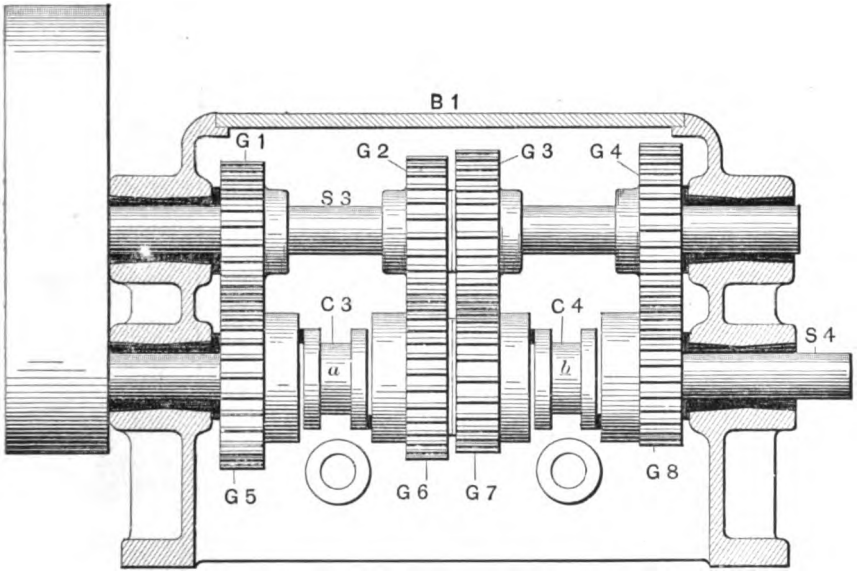

FIG. 122.

shown. These gears give four different speeds to the shaft *S* 4. The latter drives the vertical shaft *S* 2 by means of the miter-gears *G* 9 and *G* 10, Fig. 123. Now referring to Fig. 124, shaft *S* 5 is driven by *S* 2. Through a system of gearing shown in the gear-box *B* 2, the shaft *S* 5 transmits motion to the bevel-gear *G* 12. This in turn drives the shaft *S* 6 by means of the bevel-gear *G* 13, shaft *S* 7, and bevel-gears *G* 14 and *G* 15. Finally, the drill-spindle *S* 8 receives its motion through the gear *G* 16, which meshes with gear 17, these two gears being on the shaft *S* 6 and spindle *S* 8 respectively.

Reversing Mechanism.—As this particular machine is designed to be used in tapping as well as in drilling holes, there are two bevel-gears on the shaft *S* 7, one of these, *G* 18, being hid behind the spindle counterweight *W* 3 in Fig. 124, but shown in Fig. 125. Both of the gears *G* 14

and *G* 18 mesh with *G* 15, but are inoperative unless engaged by a clutch between the two gears. This clutch is secured to shaft *S* 7 by a key * which causes it to rotate with the shaft and at the same time

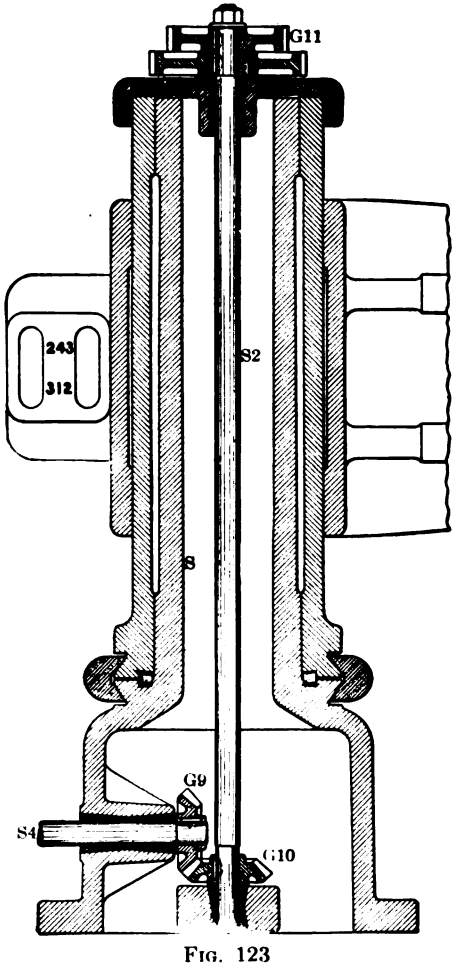

FIG. 123

leaves it free to travel lengthwise of the shaft by the movement of the head *H* along the arm *A*. The object of this arrangement is to give both a forward and reverse movement to the drill-spindle, the forward

* The instructor is advised to make on the blackboard a sectional view of *G* 14, showing the key.

movement being used for drilling and tapping holes, and the reverse movement for backing the tap out.

This method of getting a forward motion by engaging the clutch with *G* 14 and a reverse motion by engaging it with *G* 18 should be particularly noted by the student. The clutch is shifted by the handle *H* 3, Figs. 124 and 125.

Feed-gear.—The feed-shaft, *S* 9, Fig. 125, is driven from the drill-spindle by spur-gears as shown. At the lower end of *S* 9, and in the

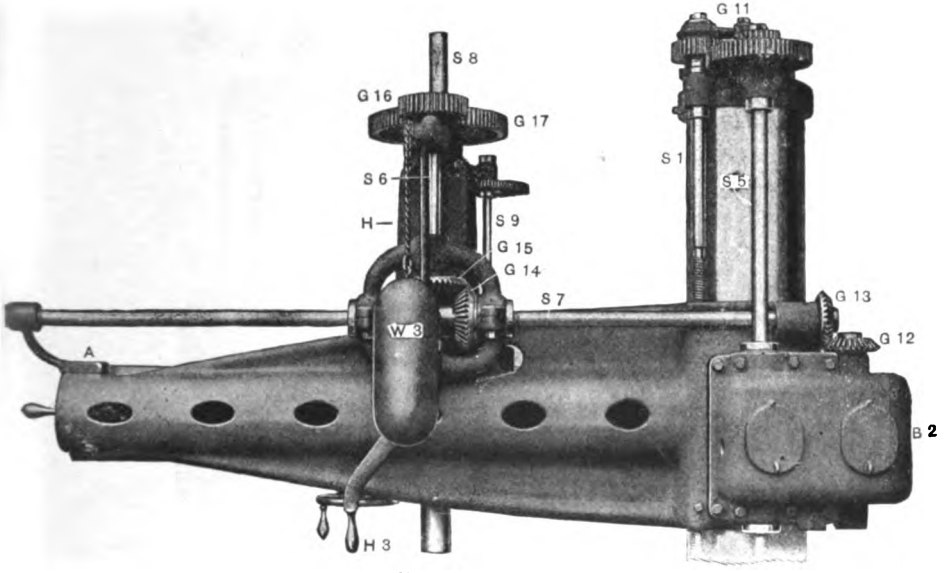

FIG. 124

gear-box *B* 3, Fig. 126, is a system of gearing by which *eight* different speeds are communicated to the worm *W*, the handle for same being within easy reach. The worm-wheel *W* 1, which is driven by *W*, has on the inner end a small gear *G* 19, Fig. 125, which gives motion to *G* 20. On the same shaft with *G* 20 is a pinion (small gear), giving vertical movement to the drill-spindle *S* 8 by meshing with the rack *R*, Fig. 126.

The Hand-feed and Quick Return.—We have in the above train of gears a very efficient and convenient system of mechanism for the automatic feed. When it is desired to feed the spindle by hand the worm-shaft *W* is disengaged from the gearing in feed-box *B* 3, Fig. 126, and the spindle is fed by hand-wheel *H* 1. The drill is quickly

withdrawn from the drilled hole by pushing in lever *L* and turning it at the same time. The effect of pushing this lever in is to disengage the clutch which binds the worm-wheel *W* 1 to its shaft.

No automatic movement of the head *H* is needed. It is moved by the hand-wheel *H* 2, Fig. 126. *H* 2 operates the worm and worm-wheel shown, and these give motion to a pinion meshing into the rack *R* 2.

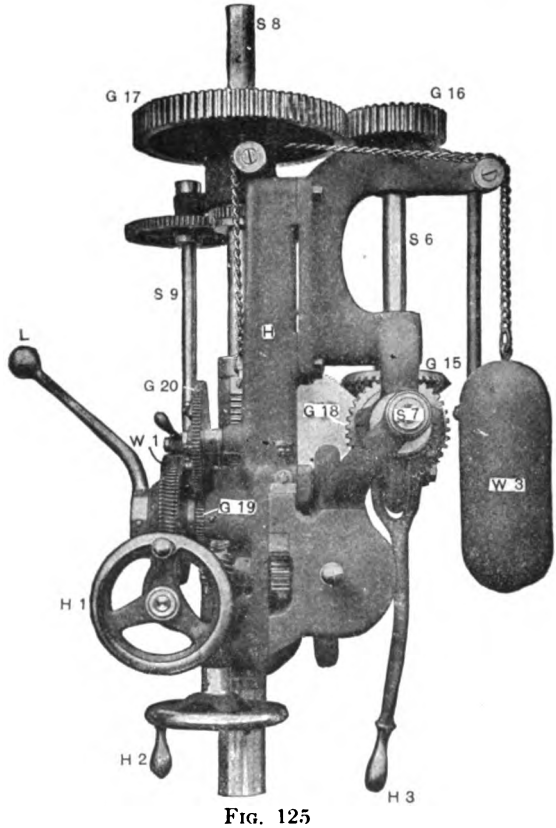

FIG. 125

The Depth Gage.—This machine is provided with a depth gage of unique design, shown in connection with *G* 20, Fig. 126. The graduated dial may be set at zero independently of the spindle, and several different depths of holes may be drilled without disturbing the dogs, which are set by the dial as required. Thus, suppose the two dogs *D* and *D* 1 to be set for drilling holes 9″ and 12″ deep alternately; having drilled a 9″ hole, it is necessary only to lift the latch *L* 1 an instant

to let the first dog clear it when drilling the 12″ hole. It will be understood that when one of the dogs strikes the latch it causes the feeding to cease by the disengagement of the clutch *C* 2. The latter may be disengaged by hand by the handle shown, and to avoid damaging the

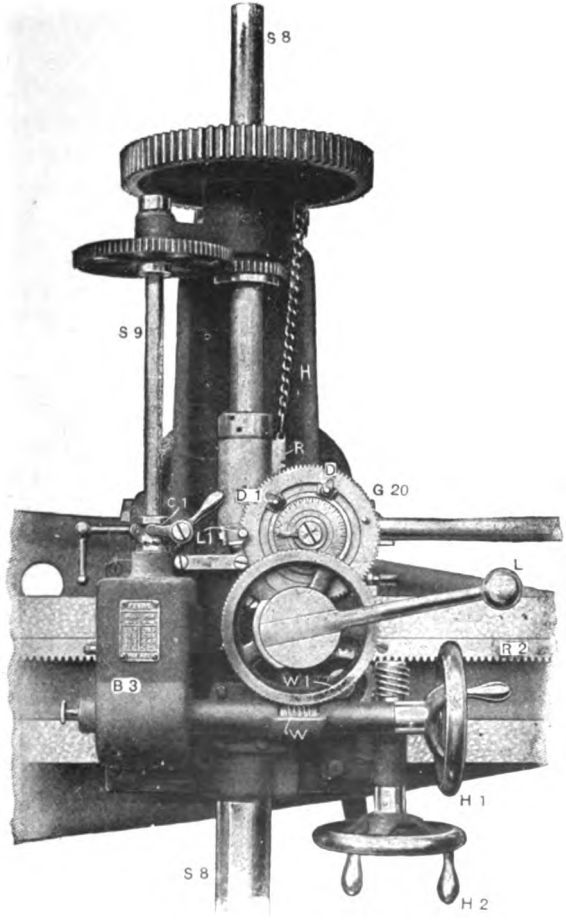

FIG 126

mechanism it is automatically disengaged when the drill-spindle has reached the extreme end of its travel.

Detailed Description of the Gearing in the Gear-boxes. – The sixteen *speeds* of *S* 8, given by the combination of the gears in gear-boxes *B* 1 and *B* 2, are in *geometrical progression* ranging from 17 to 267 revolutions

per minute. So, also, are the eight *feeds* in the gear-box *B* 3, which vary between .007″ and .064″ per revolution of spindle. All of these speeds and feeds are controlled by handles within easy reach of the operator. It may be well to further explain these gearing systems.

Referring to Fig. 122, the four gears *G* 1, *G* 2, *G* 3, and *G* 4 are tightly keyed to shaft *S* 3, while only one of the mating-gears can be locked at one time, the clutches *C* 3 and *C* 4 being used for this purpose. The velocity ratio of the shafts *S* 3 and *S* 4 depends on the ratio of the diameters of the pair of gears which control the speed at any given time. When one of the gears on shaft *S* 4 is locked the other three revolve

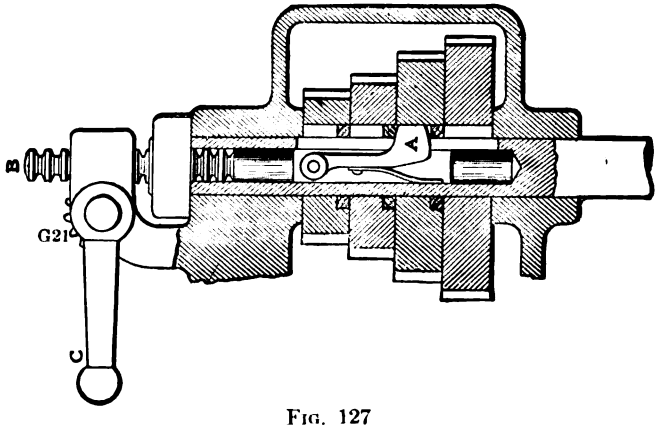

FIG. 127

idly, as was explained in connection with the sliding-key gears shown in Figs. 118 and 119.

The gearing in gear-box *B* 2, which takes the place of "back gears," is somewhat more complicated. The highest speed is obtained by speeding up at this particular part of the machine. Inasmuch as the gears for elevating the arm must be thrown in mesh by tumbler action, it is necessary that these gears run at a comparatively slow speed, and this is the principal reason for speeding up the back gears.

Fig. 127 shows a sectional view of the *sliding-key gears* in gear-box *B* 3. These are driven by four other gears tightly keyed to a shaft in the box. The key *A* is moved lengthwise in the hollow shaft by the engagement of gear *G* 21 with the rack *B*, the gear being rotated by the lever *C*. The key may be held in a position for locking either of the four gears, and, from what has already been said respecting such systems, it will be readily understood that the velocity ratio at any given time will depend upon the ratio of the pair of gears which control the speed

at that time. The four speeds given by these gears are changed by other gears in the box, so as to give eight speeds in all.

The student should note the difference between the main driving-mechanism in this machine and that in which a stepped cone is used. It may be remarked in this connection that there is a growing tendency in machine-tool design to substitute gearing for cone pulleys. The manufacturers of this machine claim that they were the first to use gearing in place of the main driving cones.

An Important Principle in Design.—It is generally understood by designers that *box* and *tubular* forms of framework are well adapted to resist the stresses to which machine-tools are subjected. But, as a rule, these forms have not been adopted in designing the arms of radial drills. However, the designer of the machine just described has so arranged the mechanism connected with the head as to admit of the arm being made of approximately tubular cross-section. In the factory where this machine was built $^3/_8$″ *holes have been drilled with a feed of nearly* .06″ *per revolution* of drill before the drill failed, the regular feed for such drills being about .006″. The manufacturers of the drilling-machine referred to attribute this extraordinary performance to the torsional stiffness of the arm. Mr. F. G. Halsey, associate editor of the "American Machinist," in an editorial in that journal July 24, 1902, illustrates the theory held by Mr. Norris, the designer and patentee of the machine, as follows: "Let the reader take a piece of common pasteboard mailing-tube, 8 to 10 inches long, in the two hands and twist it. It will of course be found to be quite stiff and unyielding. Next slit the tube its entire length with a penknife, as shown in Fig. 128, and twist it again. Its

FIG. 128.

stiffness against torsion will be found to be gone. There is simply no comparison in the strength of the tube before and after slitting. In the former condition it has a good deal of strength, while in the latter it has none. When the tube is slit and then twisted the two edges of the cut *slide on one another* in the manner which we have tried to show in the illustration, and this sliding takes place with the most trifling effort."

Mr. Halsey, in the editorial a part only of which has been quoted,

does not quite agree with Mr. Norris. He says in effect that while the ordinary radial drill-arm has a deep gap on one side, this gap is closed at each end, and this metal on the ends must in a measure resist the sliding tendency of the edges of the gap. He attributes the extraordinary results in part to improvements in the twist-drill.

The $^3/_8$" holes in the test mentioned above were drilled in cast iron from the solid. While such results cannot be realized in average practice, it may be reasonably inferred that the *feeds* recommended by the manufacturers of twist-drills *may*, under favorable conditions, *be considerably increased.* This is no reflection upon the drill-makers, but rather

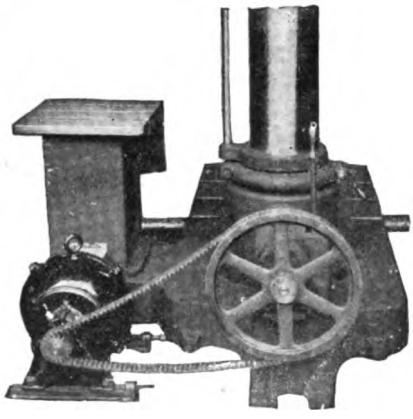

FIG. 129

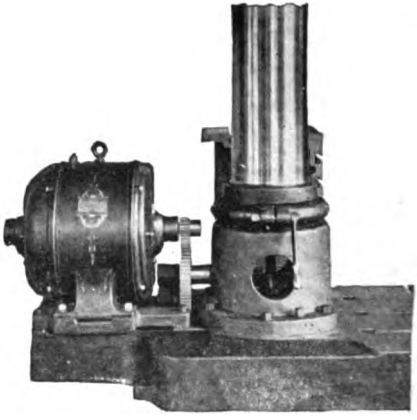

FIG. 130.

it is an indication that they have underestimated the value of their product.

Motor-driven Radial Drills.—Fig. 129 shows a rear view of the drilling-machine that has been described, in connection with a 3-H.P. *constant-speed* motor; and Fig. 130 shows the machine as modified to adapt it to a 3-H.P. *variable-speed* motor. In the former case the machine has 16 speeds, the same as when driven by one belt. When the variable-speed motor is used the drill speeds are controlled partly by the motor and partly by the gearing in the gear-box *B* 2. In this case gear-box *B* 1 is not used.

It may be of interest to the student to know that these machines, which require a 3-H.P. motor, are designed to drill holes from $^1/_2$ to $3^1/_2$ inches diameter.

Universal Radial Drills.—The *plain* radial drills above described are so designed that holes cannot be drilled at any angle with the horizontal

other than a right angle. Fig. 131 shows a *universal* radial drill. The arm in this machine may be rotated on its axis and clamped in any position, and the head may be rotated in a plane parallel to the face of the arm. With these adjustments holes may be drilled *at any angle*. The extreme end of the arm of this machine may be supported against springing by a *tie* from the base.

Drills are also made with only one of the angular movements. Such machines are called *semi-universal* radial drills.

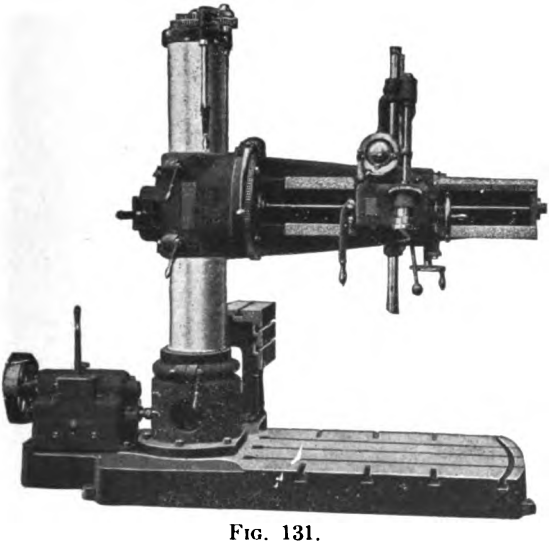

FIG. 131.

Tilting-table.—In Fig. 132 is shown a table designed to be used with the plain radial drill for angular drilling. The table may be tilted through 90° by means of the crank and worm-gearing. It also swings on its axis.

MISCELLANEOUS DRILLING-MACHINES

Suspension Drills, etc.—The drilling-machines already shown are approximately typical of their several classes. There is, however, a great variety of designs of these machines. We have post-drills, wall-drills, overhead traveling drills, suspension drills, etc. One design of the last-named drills is illustrated in Fig. 133. This machine has eight speeds and three automatic feeds. It also has the usual hand-feed. It will be seen that a 4-step cone and back gear gives the eight speeds,

the three feeds being effected by the two 3-step cones shown on the left.

Such machines are specially adapted to large plate work and other work requiring wide horizontal area.

Upright Drill with Revolving Table.—The machine illustrated in Fig. 134 is similar to the common upright drill, excepting that it has a

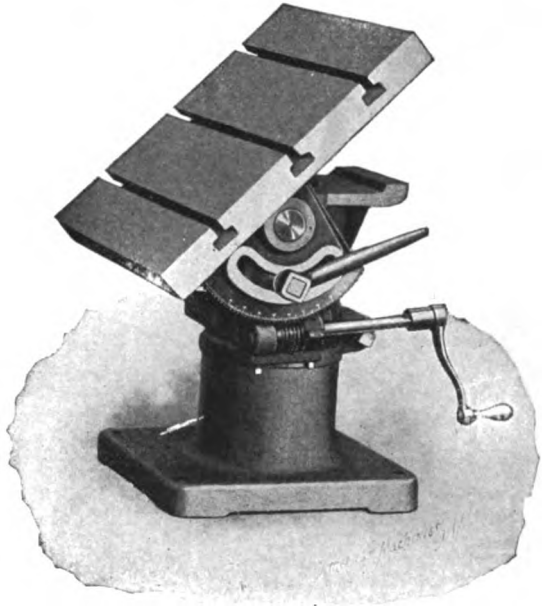

FIG. 132.

revolving table in addition to the revolving spindle. The mechanism for driving the table is separate from the spindle-driving mechanism, so that the spindle may be run for ordinary work without running the table. The object in this design is to better adapt the drill to chuck work, such as pulley boring, etc. With a revolving table such work can be more quickly "trued up" than with a stationary table. The work is usually cored, and a boring-bar, guided by a bushing in the central hole of the table, is often used to enlarge the hole. Sometimes a chucking-reamer is used instead of the boring-bar. In either case the hole would generally be finished with a finishing-reamer.

Multispindle Drills. — Multispindle and gang * drills are manufactured in many designs and for many different kinds of work. They

*These terms may be used interchangeably.

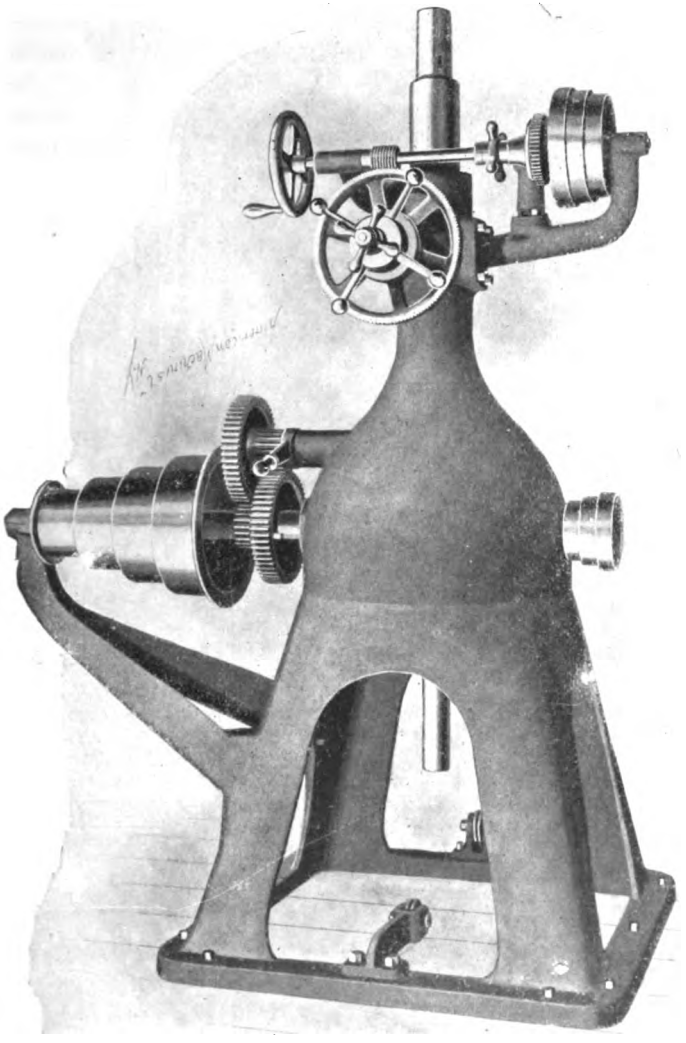

Fig. 133

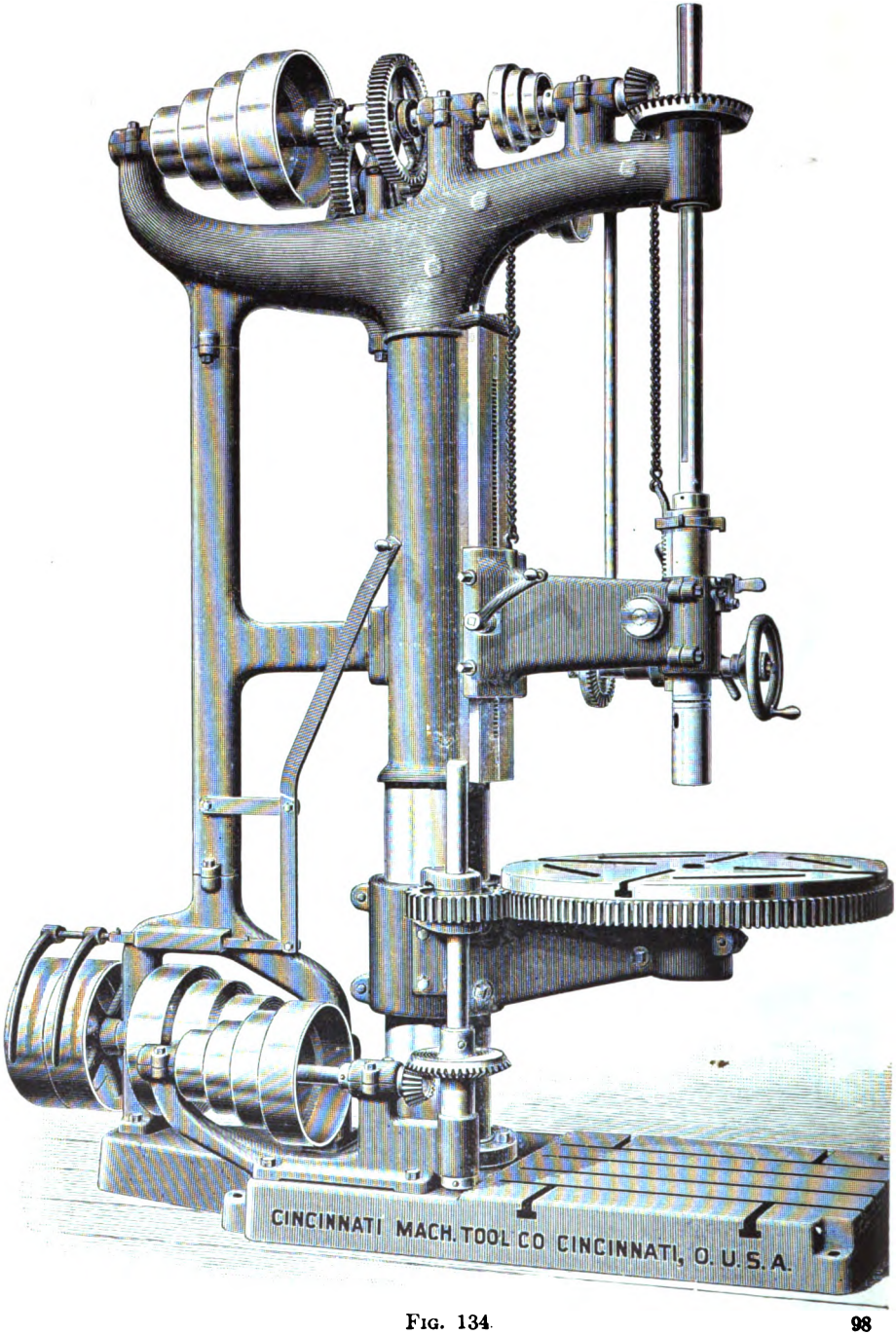

Fig. 134.

are made to drill holes in straight lines, in rectangles, and in circles. They may be made also for holes in almost any curve. In some machines the distances apart of the drill-spindles are fixed; in others these distances may be changed. The spindles may be driven altogether by belts, in which case one belt may envelop a number of pulleys (one on each spindle), or they may be driven partly by belts and partly by gearing. In the latter case there may be one central gear driving, by intermediate gears, the several spindles, or, if the spindles be in one straight line, they may be driven by a horizontal shaft and bevel-gears. Fig. 135, which shows a machine designed especially for drilling arch bars, has six spindles, and these are so bolted to the frame as to admit of limited adjustment. The horizontal shaft S is driven by the cone pulley P and spur-gears, as shown. On the right-hand end of this shaft is an angular shaft, S 1, driven by the two bevel-gears G and G 1. This shaft, by means of the worm- and spur-gearing shown at its lower end, automatically feeds the table and work to the revolving drills.

In Fig. 136 we have a multiple-spindle drill operated by a belt nearly the same as in the sensitive drill of Fig. 116. The upper sections of the drill-spindles in this machine are fixed with respect to the driving-gear, but the lower sections are adjustable laterally within certain limits, the lower bearings being separately secured to the framework by bolts held in T slots. The connection between the lower section of each spindle and the upper section is made by means of the well-known *universal joint*. If the student is not familiar with this kind of shaft connection, he may find it on almost any milling-machine.

Turret-drills.—The machine shown in Fig. 137 is radically different from any previously described in this chapter. The main driving mechanism, consisting of tight and loose pulleys and 4-step cones, is of ordinary design; but the connection between the upper driving mechanism and the drill-spindles is novel. Fig. 138 shows an enlarged view of the upper part of the machine with the pulleys removed. This machine has twelve drill-spindles, only one of which revolves at one time. One of these spindles is shown at S in the figure. A description covering the operation of this spindle will apply equally well to each of the twelve.

On the right-hand end of the shaft S 1 is a bevel-gear G meshing with another bevel-gear, G 1, which is loosely keyed to the driving-shaft S 2. On the lower end of S 2 is a clutch that engages with a similar clutch on the spindle S when the latter is in operation. Pivoted at P is a bell-crank lever, one end of which is so connected to the spindle

879646

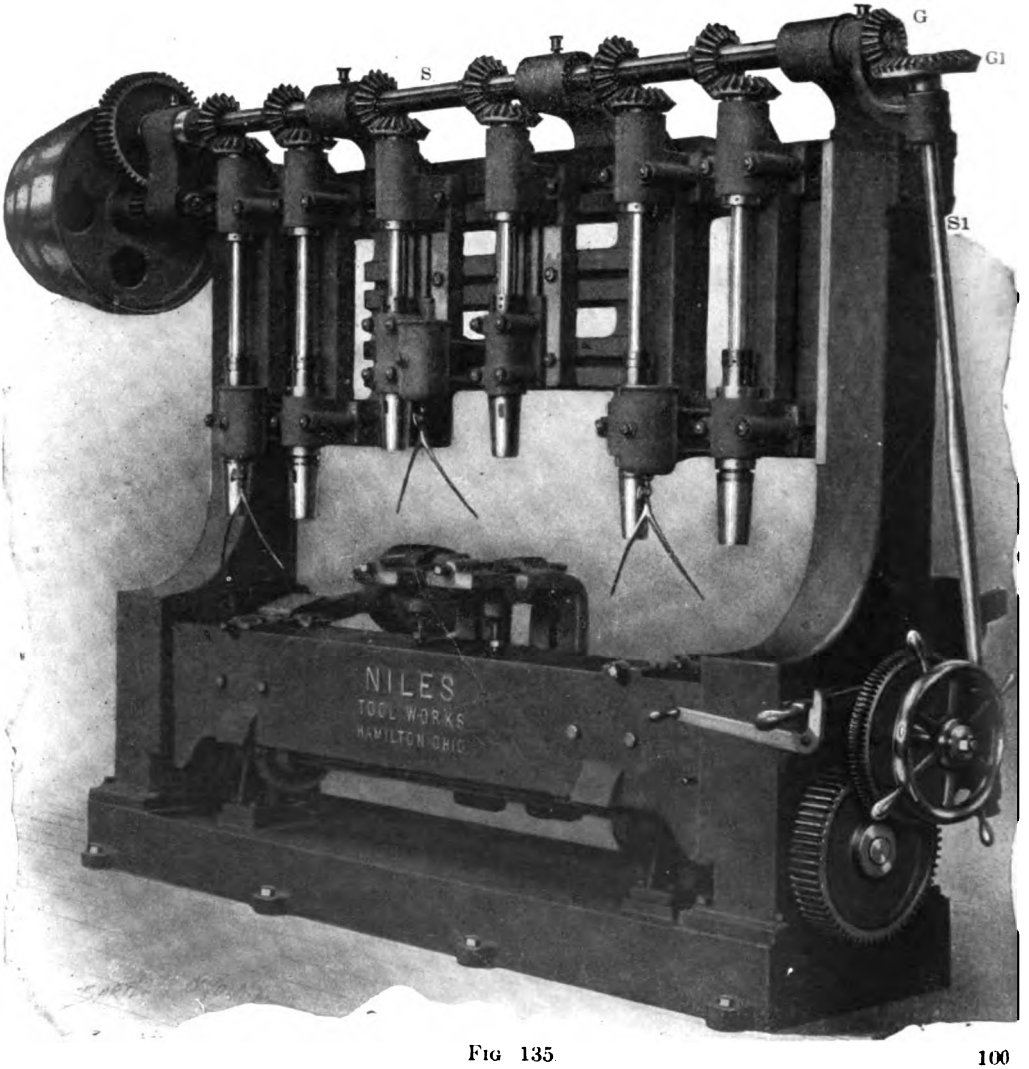

Fig 135

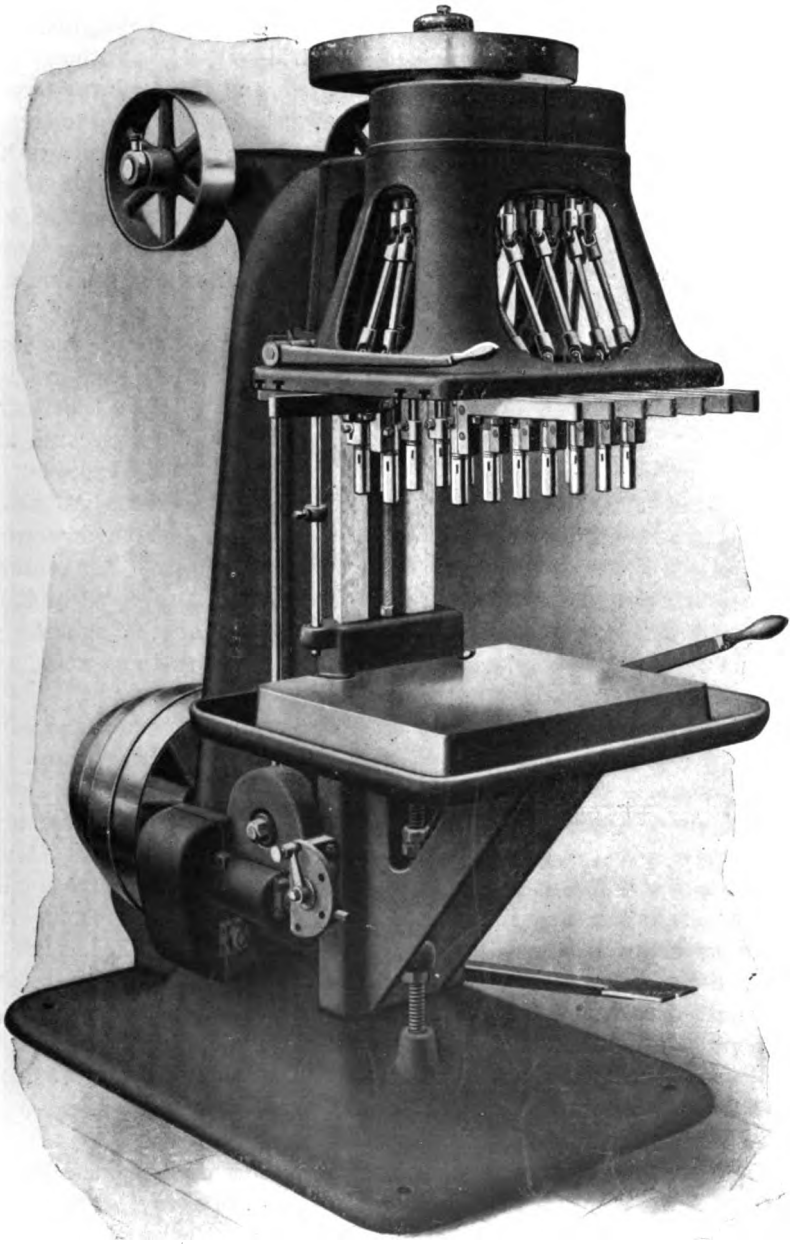

FIG. 136.

S 2 as to give vertical movement to the latter when the lever is moved. The other end of this lever is connected to a lock-bolt L that holds the turret-head in position when one of the drill-spindles is in operation. The other levers and rod connections, L 1, R 1, and R 2, lead to a treadle movement within convenient reach of the workman. When the treadle is pressed downward it draws the lock-bolt out of the socket S 3. At the same time the shaft S 2 is lifted so as to be disengaged from the spindle S, in which position it is shown in the engraving.

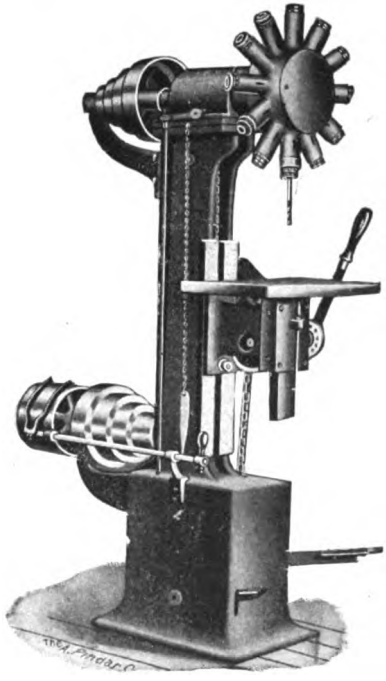

FIG. 137.

As was stated, only one drill or other tool can be used at any given time, and when the turret is rotated to bring a second tool into operation, the lock-bolt L will automatically enter its socket and the shaft S 2 move downward to engage and drive the spindle S. The turret is revolved by hand to bring each of the spindles in adjustment with the work, as wanted.

The student will note that while this machine differs from the multiple-spindle drills in that only one spindle can be used at one time, this drill has a very decided advantage as compared with a one-spindle machine. Thus in some lines of work it is necessary to perform *several operations on each hole.* The hole may need to be drilled, reamed, counterbored, tapped, etc. In this machine the required tools having been adjusted once, each tool may be quickly brought into operation by revolving the turret. When a one-spindle machine is used, if each hole is completed with one adjustment of the work a great many adjustments of various tools will be required, consuming much more time than merely revolving the turret.

Turret-drills designed especially for sewing-machine details will accomplish an almost incredible amount of work in a day. The author has on his desk the illustration of a machine made by the National

Automatic Tool Company which is represented to drill 19,000 holes every ten hours. We have space only for a general statement of the possibilities in this class of machinery. The manufacturers make also a somewhat different machine which "drills, reams, faces, and counterbores all the holes in a sewing-machine arm, including the shaft-holes, without taking the work from the jig."

High-speed Attachment.—The large drilling-machines run entirely too slow for holes less than $^1/_4$" diameter. When one has a common upright drill or any large drilling-machine, but no sensitive drill, the

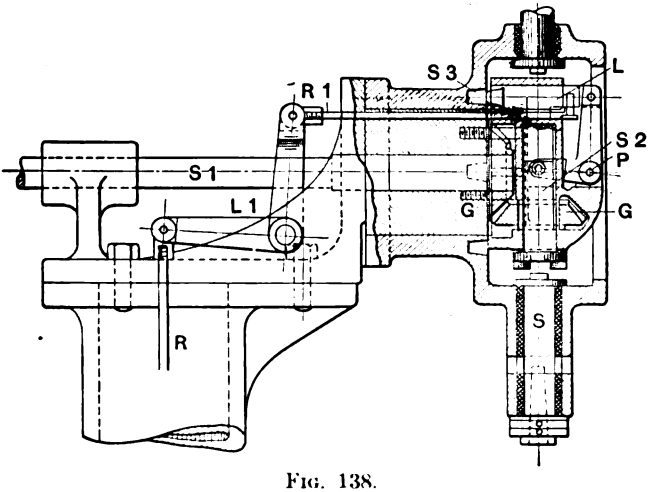

FIG. 138.

high-speed attachment shown in Fig. 139 is very handy. It will be seen that the shank of this device is an exact counterpart of a drill-shank, and it may be used in the spindle of the drilling-machine in the same manner that a drill is used. Within the casing of this device is a system of gears quite similar to the back gears on the upright drill. There is this difference, however, that in this device gears increase the speed of the drill, while the back gears decrease the speed of the drill-spindle. The drill is driven by the small chuck shown, and the casing is held stationary either by hand or by a stop-pin inserted in drilling-machine table.

DRILLING-MACHINE WORK AND METHODS OF CLAMPING THE WORK TO THE TABLE

Character of the Work.—The principal work of the drilling-machine is, of course, drilling and boring.* It is also used for machining the

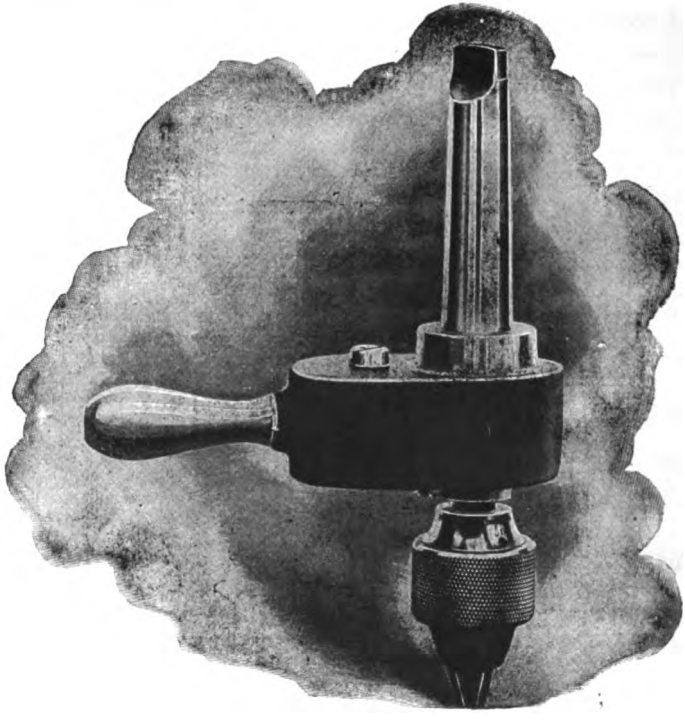

FIG. 139.

bosses on framework, etc., and sometimes for turning the periphery of bosses and hubs. When made for both forward and reverse motions, as many drills are, the drilling-machine may be used for tapping holes also.

Starting the Hole.—To drill a hole we first indent the metal with the center-punch, and then draw a circle with compasses concentric to the center. This indentation is designed to direct the point of the drill, but from various causes the drill does not always follow concentrically with the circle. It is necessary, therefore, in starting a

* The term boring, as used in the machine-shop, means enlarging a hole.

hole to lift the drill before it has drilled any considerable depth, and ascertain if the hole is following as intended. *If the hole has started eccentrically, a small groove must be cut on the long side of the eccentric,* in order to cause the drill to incline in the direction of the groove. It is sometimes necessary to repeat this process two or three times before the drill is properly started. It should be observed, however, that the work of *correcting* the drill *should be completed before the hole is the full diameter.* A draw-chisel, or diamond-point chisel, or even a center-punch, will answer for correcting eccentricity in starting a hole. The groove should be cut clear to the center.

Holding Work by Bolts and Straps.—As drilling-machine tables are always made with slots for bolts, one of the first methods of securing work that suggests itself is by means of bolts and straps. Fig. 140 shows a piece of work thus clamped. The straps *S* may be made of flat bars of machine-steel from $^1/_2$ to $^3/_4$ inch thick and from $1^3/_4$ to $2^3/_4$ inches wide, according to the character of the work. Some workmen prefer to make the straps U-shaped. A piece of steel $^3/_8$ to $^5/_8$ inch thick and about 1 inch wide makes a good strap. Fig. 141 shows top views of both kinds of straps.

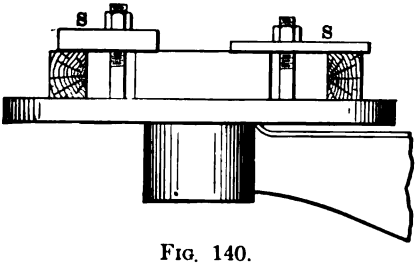

FIG. 140.

FIG. 141.

The bolts may be $^1/_2$ to $^3/_4$ inch diameter, the holes or opening in the straps being about $^1/_{16}$″ larger. Most bolts for the above purpose are $^5/_8$″ diameter, and for all but exceptionally heavy work $^5/_8$″ diameter for the bolts and about the average of the above sizes for straps should be adopted as the standard. Fig. 142 shows a *planer*-bolt which may be inserted anywhere along the T slot (without starting at the end of the slot) and then turned about 90° to give the bolt-head a hold. When the drill has the same kind of slots these bolts may be used on the drill-table also. If the slots are merely *rectangular* and pass *through* the table, a bolt made square or rectangular under

the head would be better. The machine shown in Fig. 118 has both kinds of slots.

In Fig. 143 is shown a piece of work secured to a drill-table by a strap and a screw-clamp. The clamp is used merely to show another and very convenient method of holding the work. For blocking under the ends of the straps simple blocks of wood with grain in direction of pressure, or stepped cast-iron blocks as in Fig. 144, or small jack-screws, may be used.

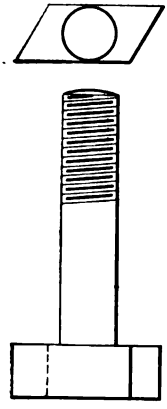

FIG. 142

A Wrong Method.—In Fig. 145 we show a strap with the block end much higher than the work. This is incorrect for two reasons: first, it puts more pressure on the block than on the work; second, it damages the head and thread of the bolt.

Protecting Finished Work.—When the straps or clamps would come in contact with the finished work surfaces the work should be protected by a strip of sheet brass or copper. Pasteboard or lead would be better for highly polished work.

Use of Angle-plates. — In clamping work having a base parallel to the required holes, a device called angle-plate or knee-plate may be used. A piece of work of this character is shown in Fig. 146. The

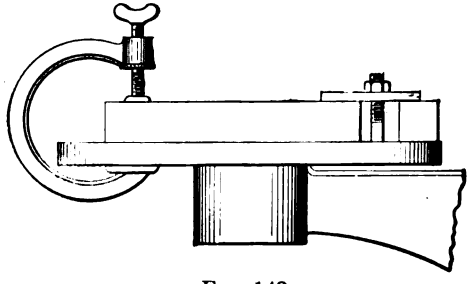

FIG. 143.

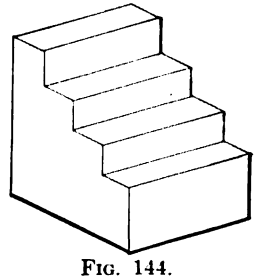

FIG. 144.

angle-plate is held by bolts and straps or by clamps to the table, and the work is secured to the angle-plate.

Holding Work in the Drill-vise.—In Fig. 147 we show a drill-vise which is used in connection with the drilling-machine. The vise is held on the table by straps or clamps, and the work held in the vise.

Fig. 148 shows a vise in which the work, having been once clamped, may be drilled at different angles; this is called a *universal* vise.

Holding Round Work.—A shaft or similar detail may be held in a vise, but in some cases *V blocks* are used for this purpose. Fig. 149 shows an end view of a shaft resting in a V block. Two or three blocks may be required, the shaft being held down by straps. In case three blocks are used, two may be placed directly under the straps, and the third block so placed as to support the shaft under the pressure of the drill.

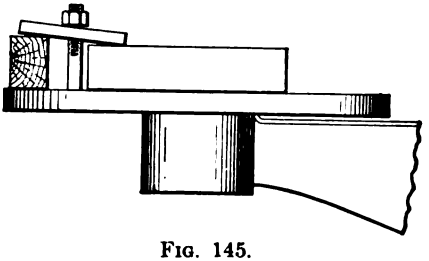

FIG. 145.

The dotted lines in Fig. 149 show a method of setting the shaft central by a try-square. Having established the center by a center-

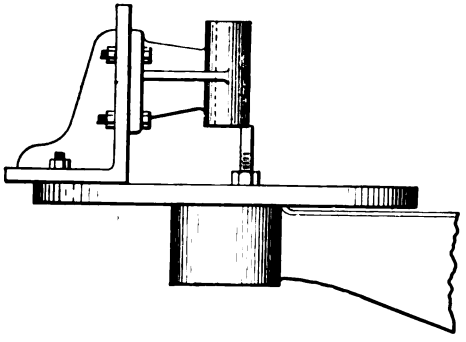

FIG. 146.

punch, the shaft is rotated in the V blocks until the center is equidistant from the two positions of the square-blade. A hermaphrodite caliper

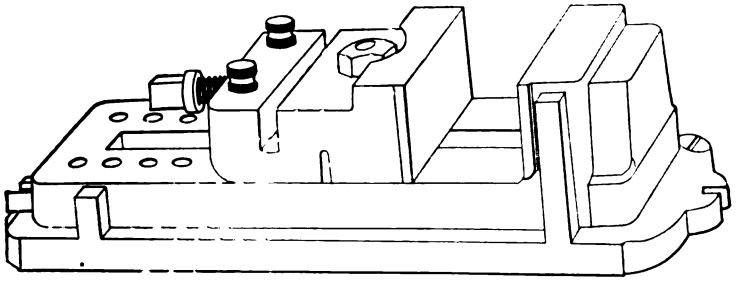

FIG. 147.

set to the radius of the shaft is a convenient tool to use in adjusting the shaft. However, a common steel rule will answer. Various methods

of clamping work are shown in the chapter on milling-machines and elsewhere in this work.

Drilling Oil-holes in Pulley-hubs.—Oil-holes in pulleys, gears, etc., are often drilled at some inconvenient angle. The attempts to drill work of this character without substantial apparatus for clamping has probably caused more disasters than any other work done at the drill.

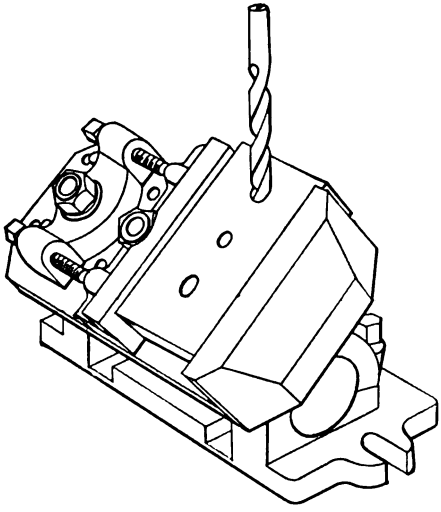

FIG. 148.

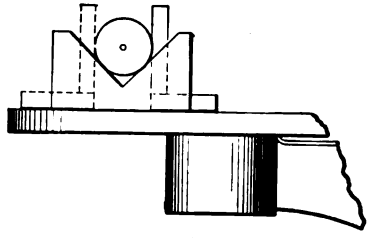

FIG. 149

Many a time the author has seen a pulley break loose from its moorings and swing around at a high rate, while oil-cans, monkey-wrenches, etc., were flying in every direction. But the boy—"Oh, where was he?" Nothing better for holding such work could be devised than the *tilting-chuck* shown in Fig. 150.* The plate *P* in this has a V lug to receive the pulley-rim, and the lower edge of the plate is hinged to lugs secured to the edge of the drill-table. The brace *B* passes through a slot in the table, and is supported by a rod passing through one of a number of holes drilled through the brace. The angle may be changed by placing the rod in a different hole.

Turning Hubs, etc.—In Fig. 151 is shown a cutter-head for turning hubs and bosses on large framework and in some other cases. The head is secured to the drill-spindle by the key *M*. Another key, *K*, passes through the arbor *F*. The latter serves to steady the device, but when

* Cut taken from article by Corneil Ridderhof in "American Machinist," vol. 27, page 127.

the hub is solid the arbor cannot be used. The cutters *DD* are held by set-screws as shown. (This illustration was first used in connection with an article by T. B. Burnita in "American Machinist," vol. 27, p. 90.

The author has made and used a cutter-head similar to the above,

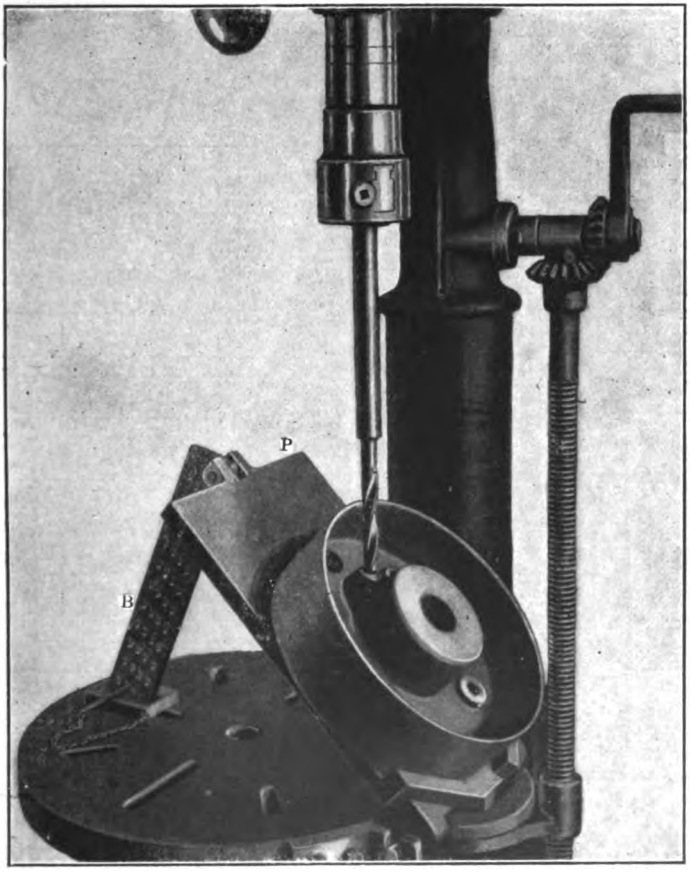

FIG. 150.

except that it was a plain cylindrical shell screwed on the drill-spindle, with cutters in the lower end held by set-screws. In addition to the set-screws, each cutter was radially adjustable by a screw having a collar at its outer end to engage with a recess made in the edge of the cutter. This was a very satisfactory device, and it is but little trouble to cut thread on the drill-spindle for this and other heads or chucks.

The tool shown in Fig. 152 may be used to face bosses, and by making the cutter with a downward projection it could be used to turn the periphery of shallow bosses and hubs.

Adjusting Work in Drilling-machine.—Some workmen who are careful to chuck work very accurately in the lathe seem to understand no

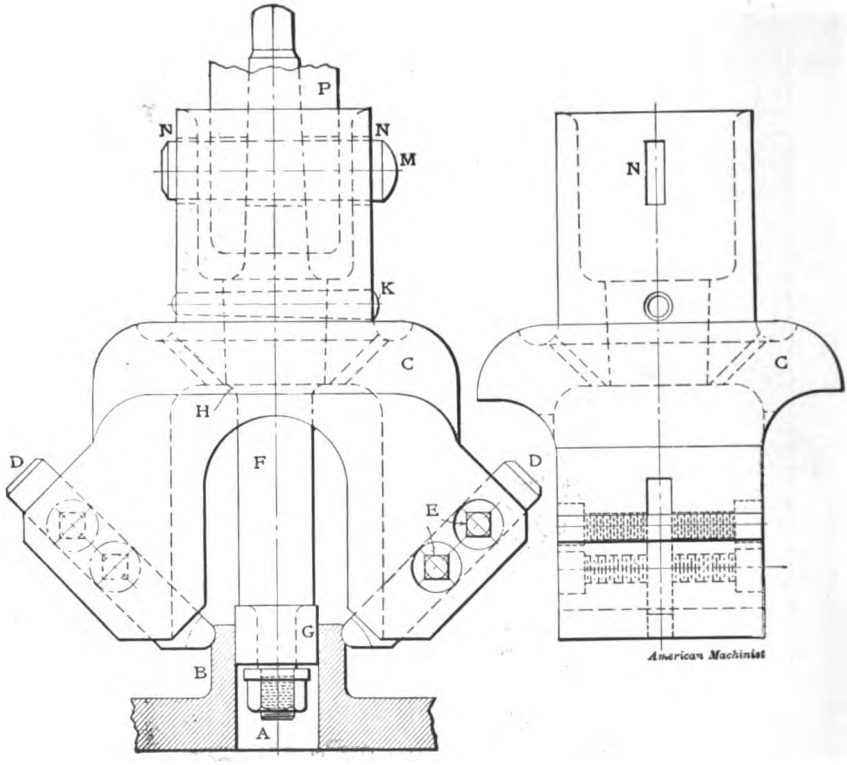

FIG. 151

better way for drilling-machine work than to set the work by the eye and the point of the drill. This method is "good enough" for common bolt-holes and other work of this character, but for reamed shaft-bearings, holes for studs for cut gears, etc., it is better to use the method described below. In marking out work to be drilled it is well to have, in addition to a circle of the diameter of the hole, another circle somewhat larger than the hole. The larger circle would be used to test the work after the hole had been drilled. For the larger sizes of holes it is desirable also to have a third circle smaller than the drill to test

the work before drilling to full diameter. We might say, by way of parenthesis, that in drilling large holes, on account of the pressure required to make the large drill cut, it will be advantageous to precede the large drill by a smaller drill. Having marked off the work from a *fine* center, it may be very accurately adjusted under the drill-spindle by the use of a tram. (In the case of a cored hole the hole may be filled with a wooden block and the circle marked off from a lead or zinc tag fastened near the center of the block.) To make the tram, take a hard-

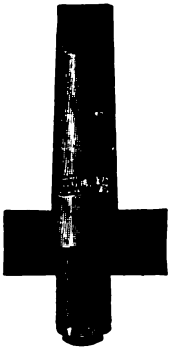

FIG. 152.

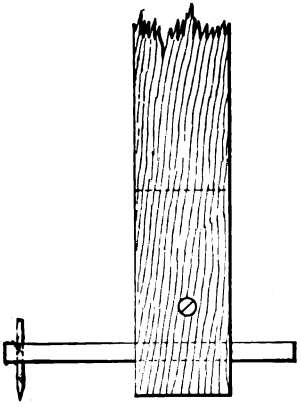

FIG. 153.

wood stick about 9″ long and shape one end like a drill-shank to fit the drill-spindle. Closely fit a wooden pin in a $^3/_8$″ hole in the other end, as in Fig. 153. The pointer in the end of the wooden pin may be made of a $^1/_{16}$″ drill-rod or of common wire. The tram is now placed in the drill-spindle, and while revolving it slowly the work is adjusted until the tram-point follows the larger circle, the pin being adjusted radially to suit the diameter of the circle. For adjusting the face of the work square with the drill-spindle, or for testing the top surface of the drill-table, a much larger tram may be made on the same principle. If the revolving tram touch the surface being tested at three or four points, it proves that the surface is at right angles to the drill-spindle. Work which requires the degree of accuracy indicated, whether cored or drilled from the solid, should generally have the hole trued up by one or more cuts with cutters in a boring-bar, the bar being guided at its lower end in a bushing fitted to the drill-table. The finishing cut may be made with a reamer.

CHAPTER VIII

DRILLS AND DRILLING

Definition and Classification.—A drill (in the primary acceptation of the term) is a tool for originating and enlarging holes in metal. We use the term "originate" to distinguish the drill from the reamer and boring-bar, which can be used only in *enlarging* holes.

Drills may be classified as follows: twist-drills, Farmer drills, flat drills, pin-drills, tit-drills, bottoming-drills and slotting-drills.

The Twist-drill. — Fig. 154 shows the typical form of taper-shank twist-drill. This drill derives its name from the fact that it was originally

FIG. 154.

twisted to its helical shape in the forge-shop. The present method is to cut the flutes or grooves in a milling-machine. The helical form of the flutes affords free cutting lips; at the same time they tend to lift the chips from the hole. To avoid weakening the drill too much the flutes are made of gradually decreasing depth from the point of the drill to the shank. This would lessen the chip room were it not for the fact that the pitch of the spiral is increased sufficiently to compensate for the decrease in depth of the flutes. Some manufacturers, however, preserve the uniform cross-sectional area of the flutes by making them of gradually increasing width, while the spiral is kept constant as to pitch.

Twist-drill Nomenclature.—Drills in general consist of two parts. The end by which the drill is driven is called the *shank*, and that part of the drill between the shank and the cutting end is the body of the drill, or the drill proper. The nomenclature of the twist-drill, however, is more complicated. Referring again to Fig. 154, *W* is the web, *LL* the

lands, *GG* the lips, *S* the shank, and *T* the tang. Similar letters refer to similar parts in Figs. 155 and 156.

Clearance of the Twist-drill.—The twist-drill, as well as other drills, is made largest in diameter at the cutting end, and tapers slightly toward the shank. The amount of this taper varies in different drills according to their size or use from .00025″ to .0015″ per inch of length. It will thus be seen that a twist-drill is slightly smaller in diameter when worn short than when new. This taper is to give the drill *longitudinal clearance* and prevent its *binding* as it advances through the hole.

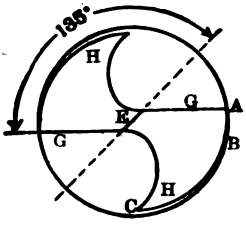

Fig. 155.

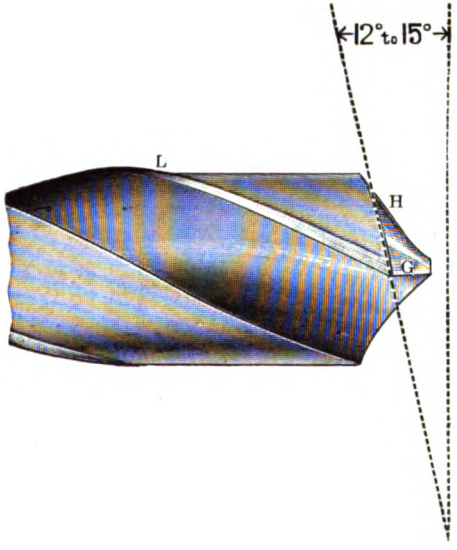

Fig. 156.

The drill is also given clearance in another way; this is illustrated in Fig. 155 by the space *C* between the outer circle and the body of the drill. This clearance is called *body clearance*. It begins at *B* and increases toward the back edge of the drill, the distance *AB* being concentric. Lacking body clearance a drill would bind and heat, and it would take more power to drive it.

And finally a drill must have *lip clearance*, or heel clearance as it is sometimes called. Referring to Figs. 155 and 156, lip clearance is made by grinding the heel *H* lower than the lip or cutting edge. This gives prominence to the cutting edges and enables them to bite or take hold of the metal. The Cleveland Twist Drill Company recommend an angle of lip clearance of 12° for the average rate of feed, and 15° for

heavier feeds. The line E, joining the two cutting edges should be, according to their practice, 135° with the cutting edges. When this angle is much less than 135° " there is danger of the drill splitting up the web." Some twist-drills are made with a fine mark running lengthwise of each of the flutes. When thus made the line E should join these marks.

Grinding the Drill.—It is essential in correct grinding that the cutting edges be of equal length and form equal angles with the axis of the drill. The proper angle is 59°, the included angle being 118°. It requires considerable skill to grind a drill correctly, and indeed it is a matter of controversy as to what is the correct form of that part of the drill which comes in contact with the emery-wheel. Some mechanics think this surface should be that of a segment of a cylinder, as shown by dotted lines in Fig. 157. Others contend that the surface should correspond to

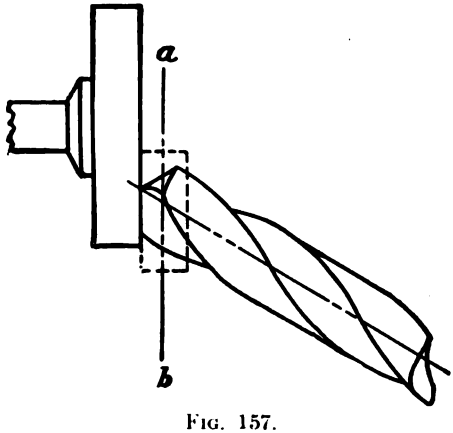

FIG. 157.

a segment of a cone, as indicated by the dotted lines of Fig. 158. The consensus of opinion favors the latter method, because it increases the clearance at the center, where most clearance is needed, and because less power is required to drive the drill when thus formed.

In a shop where many twist-drills are used it will pay to use a machine for grinding them. There are several good designs of machines for this purpose (see chapter on Grinding-machines), but if necessary to grind the drills by hand, the following instructions taken from the catalog of the Morse Twist-drill and Machine Company will be of value:

"Prof. Sweet suggests that the rear of the lip of a drill be removed, as shown by Fig. 159; this makes the cutting edge much like a flat drill. Drills properly made have their cutting edges straight when gound to a

proper angle, which is 59°. Grinding to less angle leaves the lip hooking, and is likely to produce a crooked and irregular hole. The grinding lines of a drill are placed slightly above the center, to allow for the

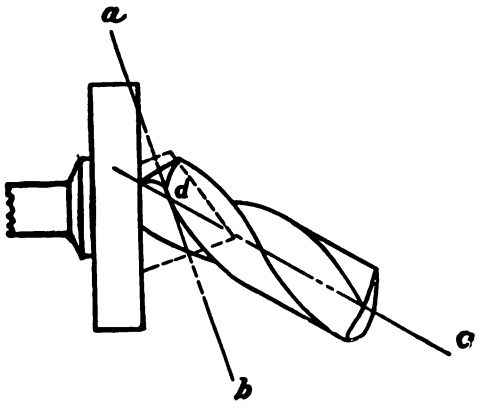

FIG. 158.

proper angle of point, which is an important factor. This angle is an index to the clearance. If the angle is too much, the drill cuts rank; if not enough, the drill may not cut. Fig. 160 shows a

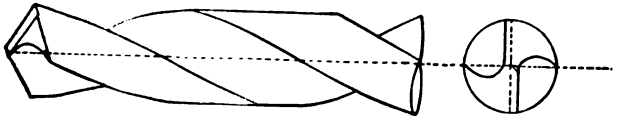

FIG. 159. FIG. 160.

proper angle. In Fig. 161 the angle is too sharp. In Fig. 162 the angle runs backward, and shows the want of clearance. An effective method of determining the clearance is to set the point of the drill on

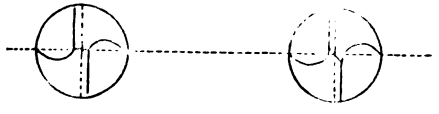

FIG. 161. FIG. 162.

a plane surface, holding a scale as shown in Fig. 163; by revolving the drill its clearance is shown, as well as the height of the cutting lips, which should be equal; also the cutting edges should be of exactly equal length—any inequality of lengths doubles itself in work. To strengthen

the drill, the center is made thicker toward the shank. As the drill is shortened through use the center shows thicker, and will work hard in drilling. To overcome this the center should be thinned, care being taken to remove an equal amount of stock on each side, and so keep the point central."

In connection with the above it may be suggested that a graduated try-square is often used instead of the scale, and it is more convenient

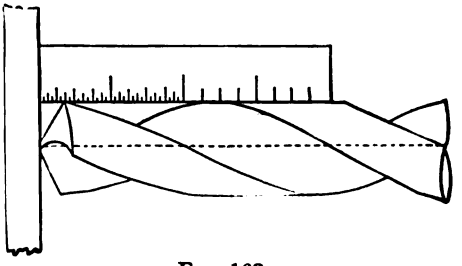

FIG. 163.

than the latter. A sheet-metal gage could be cheaply made and used, instead of the protractor. This gage should have a bearing along the body of the drill of about 5″, and should be applied in the same manner as the protractor. Its angle should be 121°. The method of applying a protractor is shown in Fig. 164.

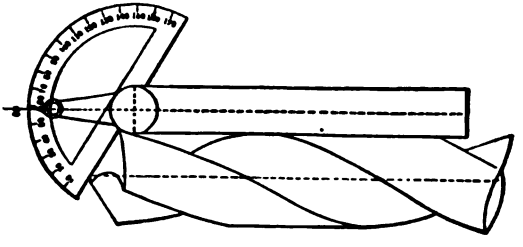

FIG. 164.

Effect of Errors in Grinding a Drill.—A drill having a conical point, or some equivalent thereof, is guided by the point in "drilling a hole from the solid." If the point be "out of center," that is out of the axial line of the drill, the drill will make a hole larger than its own diameter. A somewhat similar effect will be produced if the two cutting edges are not of the same angle. It must not, however, be inferred that these are satisfactory methods of making a drill cut larger. It

may be permissible in an emergency to slightly enlarge a hole by grinding the point eccentric, but the result is generally disappointing, as the hole is very likely to be irregular and rough.

Straight-shank Twist-drills.—The drill shown in Fig. 154 has a taper shank designed to fit into a taper hole in the end of the drill-spindle. Fig. 165 differs from the latter only in the form of the shank,

FIG. 165.

which is straight. The straight shank is designed to be driven by a chuck which screws on the drill-spindle.

Twist-drills are also made with "taper-square shanks." These are designed to be used with a *ratchet*.

Three-groove and Four-groove Drills.—Figs. 166 and 167 show respectively a three-groove and a four-groove twist-drill. These drills

FIG. 166.

FIG. 167.

cannot be used to drill holes from the solid. In drilling very large holes many mechanics prefer to use two drills. The first, a two-groove drill, makes the hole about half the size. This is followed by a three-groove or four-groove drill. The latter are also used to enlarge cored holes. It is not considered advisable to use the two-groove drill in cored holes. When used in the lathe to slightly enlarge a hole the two-groove drill tends to "draw in."

Straightway or Farmer Drills.—The twist-drill is by far the most important drill used in the machine-shop; we are, therefore, giving it the most space, and shall refer to it again in connection with the subject of "deep drilling." The Farmer drill (Fig. 168) differs from the twist-drill in that the grooves are straight and parallel with the axis of the drill rather than helical. The twist-drill presents an inclined

cutting edge to the metal, and peels the metal very much the same as a plow turns over the soil; and, as was stated, the helical form tends to screw the chips out of the hole. The Farmer drill lacks this principle, and while it will not cut so rapidly and freely as the twist-drill, it has some advantages in drilling holes for slots and in drilling sheet metal and brass. In drilling brass the twist-drill tends to advance faster than the rate of feed, and thus sometimes gouges into the metal.

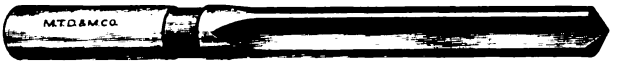

FIG. 168.

This tendency is particularly noticeable when the point of the drill is emerging through the bottom of the hole. No such difficulty occurs in the use of the Farmer drill. When drilling sheet metal the Farmer drill does not tend to lift the sheet as does the twist-drill, and in drilling holes, to save excessive chipping in making slots, the holes may be drilled somewhat closer, leaving less work for the chisel than would be necessary if the twist drill were used. Notwithstanding the advantages of the Farmer drill in certain kinds of work, it is not so efficient a tool as the twist-drill. The instructions for grinding the twist-drill apply equally well to the straightway drill.

The Flat Drill.—Some one has said that the flat drill "has the *faculty* of drilling holes that are neither round nor straight, and whose diameter seems to bear no relation to the diameter of the drill." This is a rather strong statement of the fact that the flat drill, as ordinarily made, cannot be relied on for accurate work. Fig. 169 shows the typical form

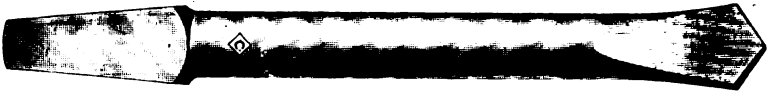

FIG. 169.

of flat drill. In its crudest shape it may be made altogether in the forge-shop at very small expense. It consists of a bar of steel flattened out and made V-shaped at the cutting end, which end is ground for clearance the same as a twist-drill. The bar is tapered on the shank end, generally to fit a square tapered socket. The flat drill was formerly used for all general work, but it has now been almost entirely superseded by the twist-drill. If one needs a special size of drill in an emergency, a flat drill could be very quickly made for the purpose. The flat drill

is also used to some extent in connection with the small drilling device called ratchet-drill. By machining the flat drill, giving it nearly parallel sides and a round shank, it may be made to do fairly good work; but even in its best shape it will not compare favorably with the twist-drill.

The Pin-drill, or Counterbore.—Most of the drills above described are designed to originate holes, that is, to drill holes from the solid. The pin-drill, illustrated in Fig. 170, is never used for this purpose. Its

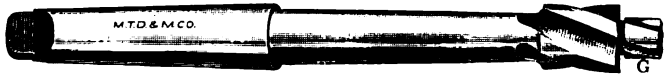

FIG. 170.

principal use is that of counterboring holes for round-head screws. For this reason it is often called a counterbore. It may be used also for enlarging holes previously drilled, and for facing small bosses to make a true bearing for nuts and heads of bolts. It is sometimes made with bevel cutting edges, as in Fig. 171, for countersinking holes for bevel-

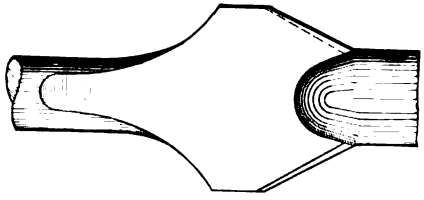

FIG. 171.

head screws. In using the pin-drill the pin end *G*, Fig. 170, fits in, and is guided by, the hole.

The form shown in Fig. 171 can be used for one size of hole only, and for one size of counterbore, but a pin-drill may be made with both pin and cutter adjustable for different sizes of holes. Fig. 172 shows such

FIG. 172.

a tool. The cutter *C* is held in a slot in the bar. The pin or guide *P* is detachable, and the different sizes are held by the screw *S*. This tool is more appropriately called a counterbore. Fig. 173 shows another method of making a counterbore.

Form and Use of the Tit-drill. Bottoming-drills. — If we wish to drill a hole that does not pass through the metal, the *bottom of the hole* will be *conical* in shape if made by any of the drills previously described.

FIG. 173.

If we wish the bottom of the hole *approximately flat*, we use the *tit-drill* shown in Fig. 174. This drill is in principle the same as the flat drill, the difference being that in the tit-drill the beveled point is reduced to a minimum. If we wish to make the bottom of the hole *perfectly flat*, we use a drill without the little beveled point, which drill is called a *bottoming-drill*, see Fig. 175. The tit-drill will originate a hole, but the

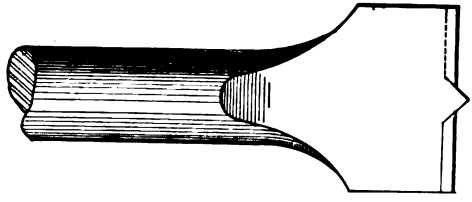

FIG. 174.

FIG. 175.

bottoming-drill must be *preceded by some other form of drill;* or the hole must be at least started, so as to form a guide for the drill on its sides. The lips or cutting edges of the tit- and bottoming-drills are ground on the same general principles as the twist-drill.

Slotting-drills.—This drill is illustrated in Fig. 176. As indicated by its name, it is designed for slots or oblong holes. It will make a

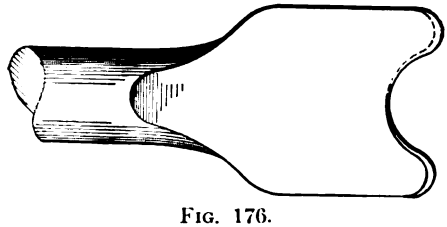

FIG. 176.

slot independently of chisel or file, but to use the drill the machine in which it is used must be provided with means of feeding either the drill or the work lengthwise of the slot. It is well to drill a hole equal

to width of slot with twist-drill or tit-drill, to give the slotting-drill a start. It may then be fed lengthwise of the slot, and downward about $^1/_{16}$ to $^1/_4$ inch at each end, until the slot is the required length and depth. The slot will be semicircular at each end, which is all right in many cases; but if required to be square, it may be made so with chisel and file. This method of making slots is not employed to any great extent, and the drill is largely superseded by the end mill. (See under Milling-machines.)

Oil-tube Drills. Deep Drilling.—In drilling holes of ordinary depth, say 1 to 4 inches, if a lubricant is needed it may be applied by a common oil-can. But for holes more than about 4″ an oil-tube drill will be advantageous. This may be made in the form of a common twist-drill having grooves milled into the clearance surface of the body into which small tubes are soldered. These tubes extend the whole length of the drill proper, and open into a kind of collar near the shank end of the drill. Connected with this collar is a pipe (sometimes a flexible tube) leading to the source of oil-supply, which is frequently a pump. The collar is a running fit on the drill, and is held stationary while the latter turns. This description holds good when the drill is used in an upright drilling-machine. Such a machine is shown in Fig. 177, in which *C* is the collar and *E* the pipe or hose leading to the oil-pump. The Morse Twist-drill and Machine Company drill oil-holes in drills less than $2^1/_2$″ diameter, and use the oil-tubes in the larger sizes. Fig. 178 shows a drill with oil-holes. These holes are drilled in blanks which are afterward twisted and milled.

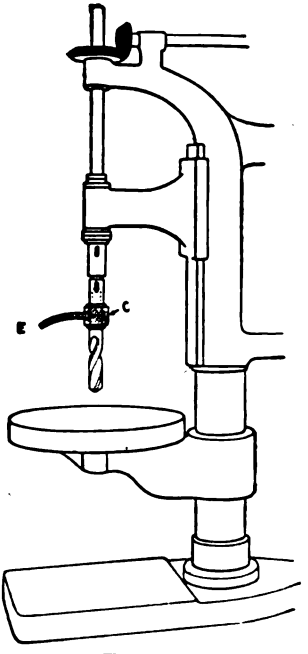

FIG. 177

For deep drilling in the lathe the drill may be made like Fig. 179, or the oil-hole may pass through the shank at its end, as in Fig. 180. A drill made like Fig. 180 is shown in operation in Fig. 181. The oil-pump is worked automatically by mechanism attached to the lathe. The pump is connected with an oil-tank into which the waste oil returns through a strainer.

In extra-deep drilling sometimes a steel-tube extension is secured to the end of a short oil-hole drill. This combination is probably cheaper than a drill of the required length.

FIG. 178.

It is essential in deep drilling that the hole be made the required diameter, several inches deep, before the special drill is started. This

FIG. 179

preliminary work may be done with a regular twist-drill and boring-tool, the latter being used to "true up" the hole.

FIG. 180.

The twist-drill is by no means the only form of drill used for deep holes. Indeed, some mechanics think it is not equal to a *one-lip drill*

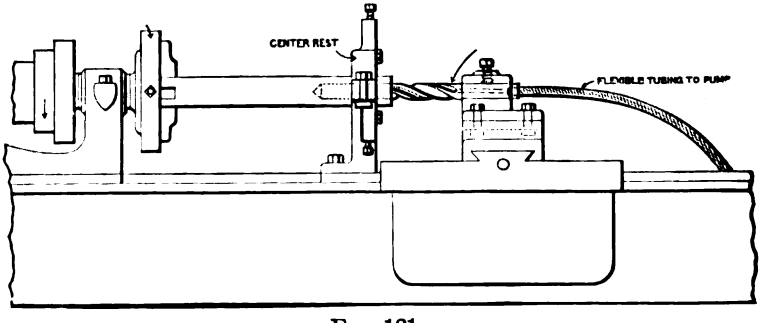

FIG. 181.

when the most accurate work is needed. The one-lip drill, however, is rather slow in operation.

For a more comprehensive discussion of the subject of deep drilling, and of tools for the purpose, the reader is referred to articles in "Machinery," published in December 1901 and January 1904.

Lubricants Used in Drilling.—Cast iron, brass, and Babbitt metal may be drilled without any lubricant. In drilling steel, oil should be used; in drilling soft steel and wrought iron we use either oil or a mixture made of sal-soda and water. A drilling compound may be purchased for this purpose. It is economical to use the mixture when there is considerable drilling to be done, but for a few holes a common oil-can is more convenient. If required to drill glass, we use kerosene oil or turpentine, the latter being preferable.

Speed of Drills.—There is considerable variation in practice respecting the speed of drills. The following formulas are suggested as an approximation to average practice:

$$\text{for machine steel R.P.M.} = \frac{100}{D}; \quad \text{for cast iron} = \frac{125}{D}; \quad \text{for brass} = \frac{225}{D},$$

where D equals diameter of drill in inches and R.P.M. the number of revolutions per minute. The peripheral speeds corresponding to the above are (nearly) 26, 33, and 60 feet per minute. The formulas assume the same peripheral speed for large and small drills. This rule is in accordance with the practice of one of the leading drill-manufacturers, and it will answer for 90 per cent of the drills used. But for the exceptionally large drills it may be necessary to run somewhat slower. As indicating the allowable difference in speeds of large and small drills, the following is taken from the table of speeds given by one of the oldest drill-makers: R.P.M. for $1/4''=565$; for $1/2''=267$; for $3/4''=168$, and for $1''=115$. These speeds are for cast iron, and it will be seen that the speed of the $1/4''$ drill is nearly five times that of the $1''$ drill.

It is the usual practice in turret-machine work—excepting cast iron—to keep the drill *flooded with oil.* Under such conditions the speed may be much higher.

The above rules should be used with discrimination and good judgment. If any of the materials be exceptionally hard or the drill heat too much, a slower speed may be necessary. It may be remarked in this connection that a drill will heat with moderate speed when the body clearance near the lips has, by improper usage, been destroyed.

"High-speed" Drills.—The foregoing formulas refer to drills made of the steel generally used for tools, viz., carbon steel. The steel called self-hardening steel is often used for lathe and planer tools. If dipped in water while hot this steel will be injured, but it takes a good temper

by merely letting it cool in air from a cherry-red heat. Self-hardening steel will stand a higher cutting speed than carbon steel.

In 1897 a mechanic at the Bethlehem Steel Works (presumably by accident) heated a self-hardening tool to a temperature approaching that of *fusion*. When the tool had cooled he was surprised to find that it would cut at a higher speed than previously. This circumstance led to extensive experiments, which culminated three years later in the celebrated "Taylor-White process" of treating steel. Other steel-makers adopted a slightly different process, and there are now on the market a number of excellent brands of high-speed steel. High-speed steel is hardened by heating it to a *dazzling-white* heat and cooling it in either oil or an air-blast.

The new steel is used for various kinds of tools, including drills. High-speed drills will do much more work per hour than carbon steel drills, and notwithstanding the high price they are decidedly economical.

Drill-feeds.—The Morse Twist-drill and Machine Company recommend feeds of .005", .007", and .010" for $1/4$", $1/2$", and $3/4$" drills respectively. As in the speeds, so also in respect to the feeds good judgment on the part of the operator is necessary. In drilling soft materials, such as Babbitt metal, brass, and extra-soft cast iron the above feeds may be materially increased. In this connection the attention of the reader is called to what was said respecting feeds in the chapter on Drilling-machines.

Drilling Hard Metal.—In drilling exceptionally hard steel or other hard metal, the surface will sometimes *glaze* under the pressure of the drill. Oil as ordinarily used aggravates this difficulty, and the cutting edges of the drill should be barely moistened with oil. As often as the surface glazes it should be *roughed up* by indenting it with a narrow-pointed chisel. This is of more value than oil.

If a twist-drill "chip off" at the cutting edges when drilling hard metal, the *fronts* of the cutting edges may be flattened slightly by grinding. This is sometimes done when drilling brass. The object in this case is not to prevent chipping off, but to overcome the tendency of the drill to "hog in." It will be explained under Lathe-tools that a tool with front or top rake is more likely to dig in when cutting brass than in cutting any other metal. Flattening the drill cutting edge in a plane parallel with its axis neutralizes the rake.

CHAPTER IX

DRILL-SOCKETS, DRILL-CHUCKS, AND ACCESSORIES

THE spindles of most drilling-machines have a tapering hole in one end to receive the tapering shank of the drill. At the bottom of the tapering hole is a slot with which the tang (or tongue) of the drill engages. This is the most common method of driving drills. The proportions of the tapers for this purpose usually conform to the Morse standard, which is approximately $^5/_8''$ per foot. There are six sizes of shanks in the Morse system. The various dimensions for these are given in a table in connection with Fig. 189 at the end of this chapter.

Drill-sockets.—As the drill-spindle can be made to fit only one size of shank, the smaller sizes of drills are driven by sockets. One end of the socket fits the spindle, and the other end fits the drill-shank. Fig. 182 shows the ordinary drill-socket, and Fig. 183 a key used for

FIG. 182.

driving out the drill and also for driving the socket out of the spindle. The key enters the socket through the slot shown.

Abuse of Drill-sockets. Positive "Grip-sockets."—The drill-shank should fit a socket like the one described so accurately that it would be driven partly by friction. But in the hands of careless workmen the socket, and often the shank, are damaged so that the fit of the taper is disturbed. The barbarous practice of hammering the socket off when the key is misplaced causes most of this damage.

When the socket has been pounded out of shape the drill-shank fails to go into the socket the full depth, and the tang works at a disadvantage. The drill runs out of true, also. If now the drill hang in a blow-hole, or catch while its point is emerging through the bottom

of the drilled hole, the framework of the machine may be sprung to such an extent as to cause the socket to lift and "ride" the tang of the

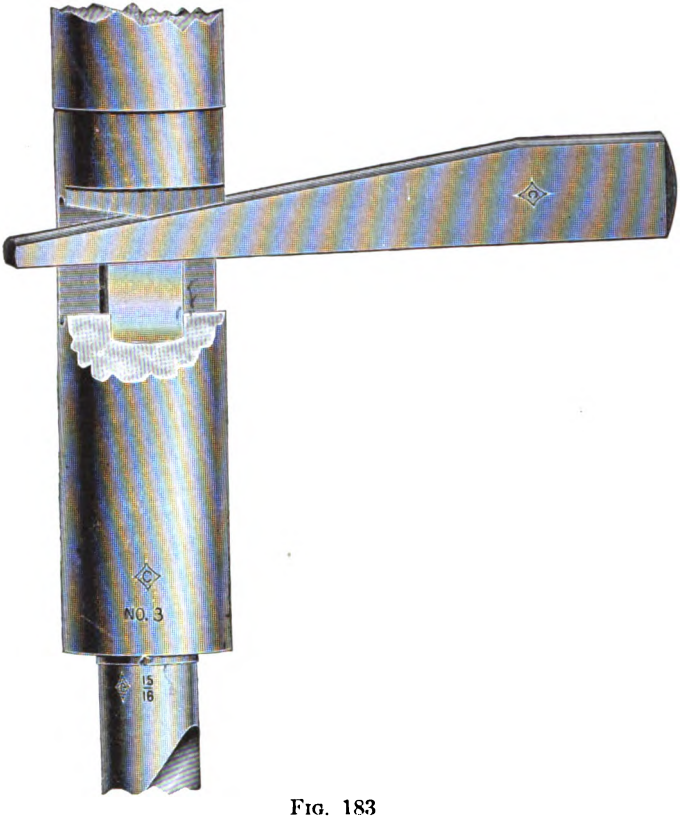

FIG. 183

drill. This destroys both the tang and the slot in the socket. In some cases the tang is twisted off. When one has a number of drills

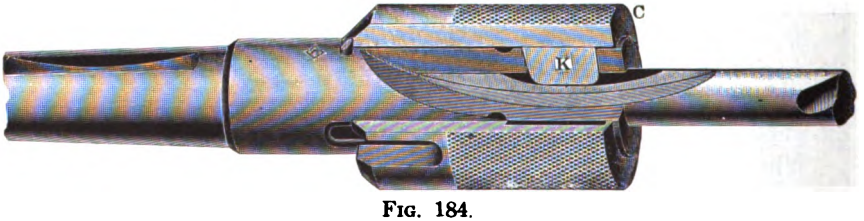

FIG. 184.

with broken tangs it may pay to purchase one or more sockets like that shown in Fig. 184.

A drill to be used in this socket must have a groove milled in its shank as in Fig. 185. The shank of the socket has a similar groove, in order that it may be driven in a similar manner. The collar *C* on the end of the socket is counterbored eccentrically. When turned forward it forces the key *K* into the groove of the drill-shank. Turning it in the opposite direction releases the drill.

A Cheap Device for Driving Broken-tang Drills.—A much cheaper though not so convenient a device may be made as follows: Get a cast-iron or steel collar about 3″ long and bore it out to closely fit the large

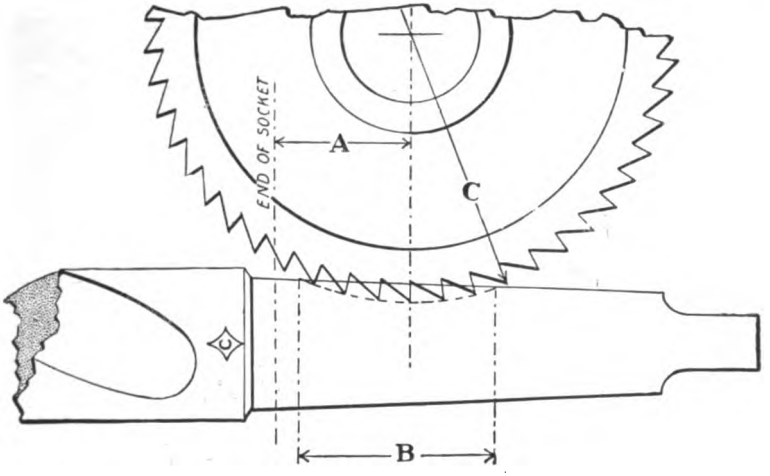

FIG. 185.

end of the drill socket shown in Fig. 182. Drill and tap for two set-screws near each end of the collar. The set-screws at one end should be pointed to fit conical seats drilled about $^3/_{16}$″ deep in the socket. The other two set-screws drive the drill by gripping in the flutes near the shank. For drill-press work headless set-screws, which do not project beyond the periphery of the collar, should be used. If the collar be held stationary in lathe work, square-head set-screws may be used without endangering the workman. A driving device of this kind does not require that the drill-shank be grooved, as the set-screws drive by the grooves already made in the drill.

If the socket to be used with this device has been damaged by hammer-blows, it should be carefully "trued up" before the collar is fitted. The drill-shanks also may need attention.

Drill-chucks.—Fig. 186 shows a drill-chuck designed for driving straight-shank drills by friction. The jaws *J* are caused to grip or release the drill by the right- and left-threaded screw *S*. This screw is operated by a key *K* which fits the square hole in its end.

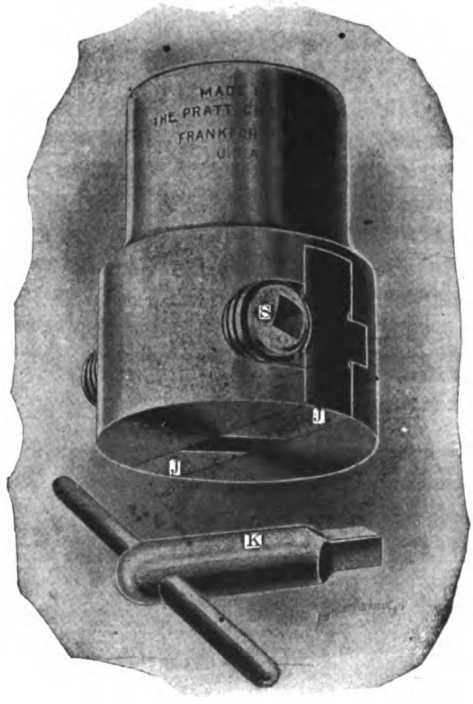

FIG. 186.

The chuck is usually fitted to an arbor which has a taper shank fitting the drill-spindle.

Fig. 187 shows a chuck in which the grip of the jaws is assisted by a special tang on the drill fitting the rectangular opening at *T*. This chuck, also, drives straight-shank drills only. The chuck method is well adapted to the smaller sizes of drills.

Lathe Drill-sockets.—Drills are sometimes driven in the lathe by a chuck on the revolving spindle, but the ordinary method is to hold the drill stationary while the work revolves. In this case the shank end of the drill is supported by the tail-spindle center, the other end

being supported by the hole in the work. To keep the drill from turning a "lathe-socket"—also called a "drill-holder"—is used. Fig. 188 shows such a tool. The taper shank of the drill fits the socket of

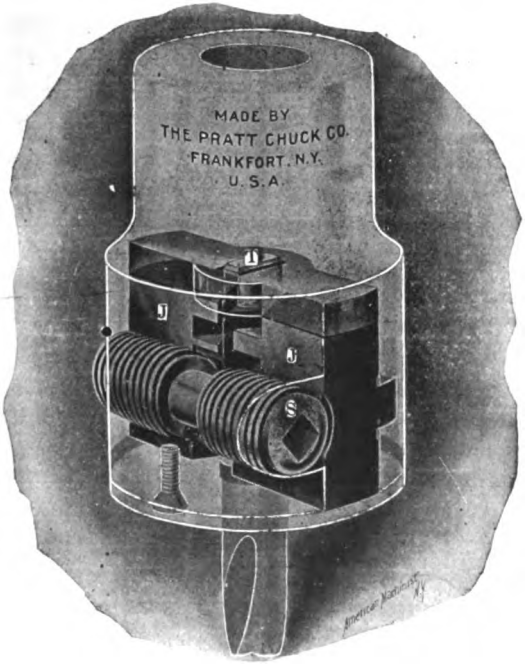

FIG. 187.

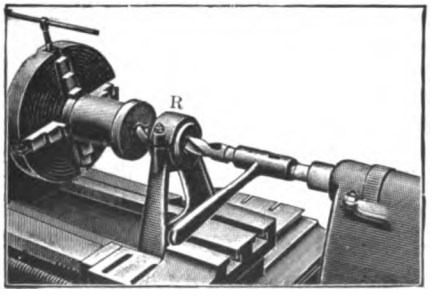

FIG. 188.

the holder, while the long arm rests on the lathe as shown, or on a tool in the lathe tool-post. In the latter case the tool-post is sometimes brought up against the arm in such a manner that the pressure required

to feed the drill moves the lathe-carriage in the same direction. The object of this is to prevent the drill from drawing in ahead of the feed, as it is likely to do under some conditions.

The *steady rest R* shown in the illustration is not essential in such work. It is, however, advantageous where a large quantity of work of one kind is to be drilled. The ordinary method is to start the drill in a conical center cut in the work. This center is made by a V-pointed tool held in the tool-post. (See Fig. 376.)

MORSE TAPER SHANKS

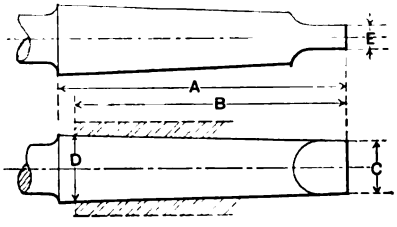

FIG. 189.

DIMENSIONS

No.	A	B	C	D	E	Taper in 12 in.
1	$2\frac{9}{16}$	$2\frac{3}{8}$	.356	.475	$\frac{13}{64}$	.600
2	$3\frac{1}{16}$	$2\frac{7}{8}$	.556	.700	$\frac{1}{4}$	.602
3	$3\frac{3}{4}$	$3\frac{9}{16}$	.759	.938	$\frac{5}{16}$	.602
4	$4\frac{3}{4}$	$4\frac{1}{2}$	.997	1.231	$\frac{15}{32}$	.623
5	6	$5\frac{3}{4}$	1.446	1.748	$\frac{7}{8}$	.630
6	$8\frac{5}{16}$	8	2.077	2.494	$\frac{3}{4}$	.626

The best drill-holders are those having one closed end with an extra large center reamed in this end. In using those having both ends open, the drill is supported by the center in its tang. As the tang is rather thin in some sizes, the center sometimes breaks through.

The Lathe-dog as a Drill-holder. Split Sleeves.—A lathe-dog can be used as a drill-holder, but a conscientious workman will not do this if it can possibly be avoided. The set-screw cuts into and raises lumps on the shank. This destroys its fit in the socket and makes the drill run "out of true." It may also cause the trouble with the tang previously mentioned. If a straight-shank drill be used, the set-screw bruises may affect its concentricity when used in the chuck.

If a drill must be held with a lathe-dog, its shank should be protected. A cast-iron collar bored to fit the shank and sawed through on one side

would answer the purpose very well. The set-screw of the lathe-dog would cause the collar to tightly grip the drill-shank without injuring it.

A thin steel sleeve cut through on one side is often used on the taper shank of a broken-tang drill which is to be driven by a drill-chuck; otherwise straight-shank drills only are driven in chucks. The sleeve being tapering in the hole and straight on the outside, makes the taper shank in effect the same as a straight shank. Another way of adapting the taper shank to the chuck is to turn it straight in the lathe.

A Hazardous Practice.—Some workmen get into the habit of taking the drill out and putting it back while the lathe is running. This is taking chances of the unsupported drill hanging and smashing both the drill and the workman's fingers.

CHAPTER X

CONSTRUCTION AND USE OF REAMERS AND BITS

Drills and Reamers Compared.—The twist-drill, which is reliable enough for most bolt-holes, clearance-holes, etc., cannot be depended upon to make holes sufficiently smooth and accurate for such work as shaft-bearings, gears, and many other machine details. There are two reasons for this: first, it is difficult to so grind the drill as to make it cut exactly its own size; second, the drill being tapering its diameter is a variable quantity, as has already been explained under the subject of "Drills and Drilling." The construction of the reamer, however, is such as to obviate in a large measure these irregularities. The principal reason for the reamer doing better work than the drill is that it is not used to originate holes, and its action is, therefore, not dependent upon a somewhat uncertain guiding-point. Other reasons are that it nearly always has more than two cutting edges, and when properly used should have *very little* metal to remove. Those tools called roughing-reamers and some chucking-reamers, which do remove a much larger quantity of stock, should, in the judgment of the author, be called bits.

Definition and Classification of Reamers.—It would be difficult to give a concise definition of reamer were we to include all of the nondescript tools that mechanics have crowded under that head. Properly speaking, a reamer may be defined as a tool for perfecting holes previously drilled or bored. Fig. 190 shows a standard *hand*-reamer. This

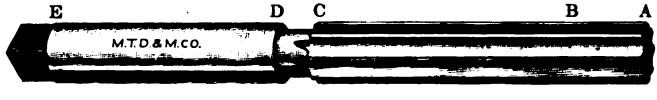

FIG. 190.

reamer should never be used to remove any considerable quantity of stock, but merely to eliminate minute imperfections left by other tools, and to bring the hole to some exact and definite diameter. In some

cases the hole may be made to within .001″ before the reamer is applied; but generally an allowance of .002″ to .010″, according to the diameter of the hole, may be left for the standard reamer to cut. If given too much metal to remove, the cutting edges of the reamer will wear too fast, and its reliability as a sizer will be too quickly destroyed.

Reamers may be divided into the two general classes of side-cutting or fluted reamers, and end-cutting reamers or bits. Each of these clases are subdivided into solid and adjustable reamers.

The Solid Fluted Reamer.—This reamer is made with slight modifications suiting the two different cases for both hand and machine use. The hand-reamer of Fig. 190 belongs to the "short" set. Reamers of the same general design are, also, made longer in regular sets, and will be made to order of special lengths. The cutting edges of fluted reamers are made tapering in diameter for about one fourth their length from *A* to *B*, being about .01″ smaller at *A* than at *B*. From *B* to *C* the taper is reversed, the diameter decreasing toward *C* at about .0002″ per inch of length. That part of the shank between *D* and *E* is usually made about .001 smaller than the largest diameter at *B*. When the cutting edges are worn to such an extent that this blank part when free from bruises will not pass through the reamed hole, the reamer is too small for standard holes.

As will be seen, the hand-reamer has a square end, upon which a wrench is used to turn the reamer. This is the main distinguishing feature between this reamer and the machine-reamer of the fluted form. The latter is made with taper and parallel shanks the same as a drill. It may also have a shank of any special shape to fit a special holder. The machine-reamer is generally, though not always, made straight or parallel from *A* to *B*. Fig. 191 shows a taper-shank reamer of the above class.

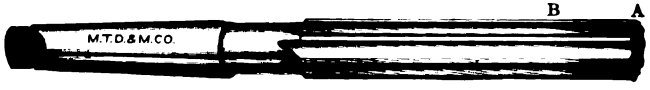

FIG. 191.

Spirally Fluted Reamers.—Reamers having the flutes parallel with the axis have a slight tendency to "draw in." To overcome this, some mechanics prefer, for both hand and machine work, reamers having flutes in the form of a left-hand spiral. The angle of the spiral or helix may be from 4 to 8 degrees. The author of this book makes spiral reamers of 6° angle, but within reasonable limits the degree of angularity is of little importance.

Rose-reamers. Rose and Fluted Reamers Compared.—The rose-reamer, or rose-bit, derives its name from the slight resemblance of its cutting end to a rose. It is essentially an end-cutting tool, and is rarely used for other than machine-work. Fig. 192 shows a rose-reamer

FIG. 192.

of typical form. It has chip- and oil-grooves on the sides, and is made with any shank required in machine-work. This reamer is largest in diameter at its cutting end, and tapers back at at about the same rate as the hand-fluted reamer, viz., .0002″ per inch of length.

The object of the taper (i.e., the taper toward the shank) on the fluted reamer is to counteract the tendency of all such reamers to ream the hole larger at the entrance end. In the rose-reamer the taper is given for the same reason we give taper to the twist-drill, viz., for clearance.

As compared with the fluted reamer, the rose-reamer has the advantage that when new it will make holes more uniform in size and more nearly straight; but it has the disadvantage that when it becomes worn on the cutting lips it will bind on the sides and "rough up" the holes. If the fluted reamer become slightly worn at the end, it will still cut on the sides; but because of its cutting on the sides it is more likely to be *deflected* by imperfections in the hole, or to cut larger than its nominal size.

As previously stated, the standard fluted reamer should be used for *finishing cuts only*, but the rose-reamer is used for both finishing and roughing cuts. However, when the same reamer is used for both purposes it soon becomes *unreliable* as a standard finishing-tool.

Shell-reamers.—Figs. 193 and 194 show respectively a fluted shell-

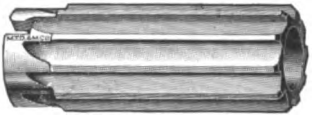

FIG. 193

FIG. 194.

reamer and a rose shell-reamer, and Fig. 195 shows the arbor for these reamers. The arbor drives the shell by the engagement of its key with

the rectangular slot cut across the end of the shell. These reamers are made with either straight or spiral flutes.

It will be understood that the object of making the reamers in the shell form is economy in the cost of material. One arbor of machine-steel will serve for several shells of tool-steel. It should be noted, however, that the saving due to cheap material in the arbors is partly offset

FIG. 195.

by the expense incident to boring the shell and fitting the end of the arbor to it.

The shells as ordinarily made are rather short for hand-reaming, being designed mainly for machine-work. The taper begins at the cutting end, and the diameter decreases toward the opposite end in about the same ratio as the reamers previously described.

Resetting Fluted and Rose Reamers.—When these reamers wear .0003 to .001 inch below standard size it is necessary to reset them, or regrind them to a smaller size. Resetting consists in enlarging the diameter of the reamer by hammer-blows in connection with a kind of set or calking-tool. The latter, which may be made by grinding a common chisel flat on the end, is held against the front of the cutting edges for this purpose. It is necessary to *anneal* the reamer for resetting, and each cutting edge must be treated until the diameter is about $^1/_{64}$" larger than standard. Having completed this work the reamer is now retempered and brought to final size in the *universal grinder*.

Lapping Reamer-centers.—Before grinding the reamer its centers should be carefully cleaned of any grit or other foreign matter that may have adhered to them in the forge. A pointed scraper made from a three-cornered file answers well for this. After scraping the centers it is usually necessary to lap them. For this process we chuck a short brass rod in the lathe, and turn the end to the shape of the lathe-centers. Having smeared this conical end with fine emery and oil, the reamer is placed on the centers and the lathe started on the fastest speed. The reamer-center is lapped by alternately forcing it against and releasing it from the revolving brass. This is done by *light* pressure with the tail-spindle, and for each time that the reamer is pressed against the brass it should be revolved slightly. By thus revolving it we distribute the emery and counteract the tendency of the lap to *scratch rings* in the

center. It is sometimes necessary to re-turn the lap before finishing one reamer; but a skillful workman can do this in ten minutes or less.

Instead of having to chuck the lap each time it is used, it would be better to *make one to fit the hole in lathe-spindle.*

Adjustable Reamers.—From a consideration of the difficulties of resetting or upsetting the solid reamers the advantages of the adjustable reamer will be apparent. While some reamers of this class will admit of as much as $^1/_{32}''$ enlargement, the object of the adjustment is not so much to make different sizes of holes as to compensate for wear and thereby maintain *standard* sizes. Figs. 196 and 197 show sectional

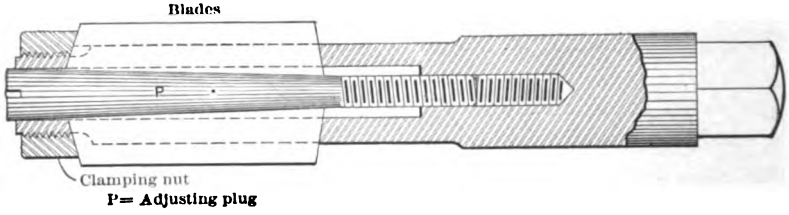

FIG. 196.

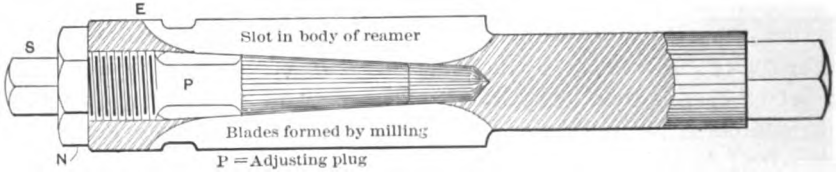

FIG. 197.

FIG. 198.

views of two designs of adjustable reamers, and Fig. 198 is a perspective view of an expansion-reamer similar in principle to Fig. 197. In Fig. 196 the shank part of the reamer is slotted to receive the detachable blades. The ends of the slots and one end of the clamp-nut are undercut, and the ends of the blades are correspondingly angling, so that when the clamp-nut is tightened it forces the blades inward against the tapering plug *P*. To enlarge the reamer the clamp-nut is slackened and the plug *P* screwed inward, forcing the blades out. The nut is then tightened to hold the blades firmly in place.

In Fig. 197 the blades, instead of being detachable, are *formed integral with the body* of the reamer by milling slots into the latter. These blades, or cutting edges, are also forced outward by the plug P, but *contract by their own tension* when the plug P is slackened. Obviously the cutting edges in this reamer will not be forced out parallel as in Fig. 196, but will be slightly convex. However, as the adjustment is very slight, and as the reamer is generally passed clear through the hole, the convexity of the cutting edges does not seriously affect the accuracy of the work.

It will be noticed that this reamer has a fixed collar E on the end. The diameter of this collar is very nearly the diameter of the hole to be reamed, being .005″ smaller, and it is designed to prevent careless workmen from allowing too much for the reamer to cut. These tools are used mostly in hand-reaming, being preceded by a machine-reamer which is within a few thousandths of an inch of the final size of the hole.

Chucking-reamers.—The chucking-reamer is so called from the fact that most of the work for which it is used is held in a chuck. It is a machine-reamer, and includes in its class two kinds of reamers which have already been described, viz., fluted reamers and rose-reamers. Fig. 199 shows a three-groove chucking-reamer. It is much like the

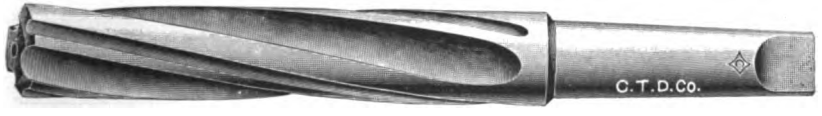

FIG. 199.

twist-drill, but cannot be used to drill a hole from the solid. Its special purpose is to enlarge cored holes. It is sometimes used in connection with the twist-drill to prepare a hole for the finishing-reamer. The three-groove chucking-reamer is essentially a roughing-reamer, and it is furnished with any of the shanks mentioned in connection with twist-drills. It is also made with or without oil-tubes. This reamer differs from the three-groove twist-drill mainly in the body-clearance, the character of which may be understood from the cut.

Wood Bits.—The wood bit as used in the machine-shop is made of wood and metal. For a size say 4″ or smaller we use a flat bar of steel a little wider at the cutting end than the diameter of the required hole and from $^1/_4$ to $^1/_2$ inch thick, as shown in Fig. 200. On the cutting end we fasten by wood-screws two pieces of wood from 2 to 4 inches long, which, with the steel, are turned in the lathe to the size

of the hole. The wood is then taken off and the clearance filed, as in a drill or other tool of this character.

For bits larger than 4″ we use, instead of the flat bar of steel, a round bar, to the end of which is secured a cast-iron head slotted to receive the cutters and wooden blocks, as in Fig. 201. The cutters are held in the slots by set-screws or wedges, and the slots for the wooden blocks, being of dovetail shape, hold the blocks firmly without wedges. The

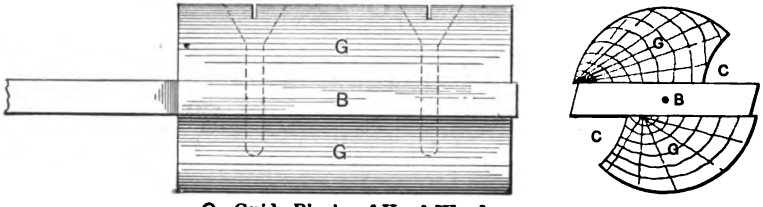

G - Guide Blocks of Hard Wood
B - Blade of Steel
C - Clearance for Borings

FIG. 200.

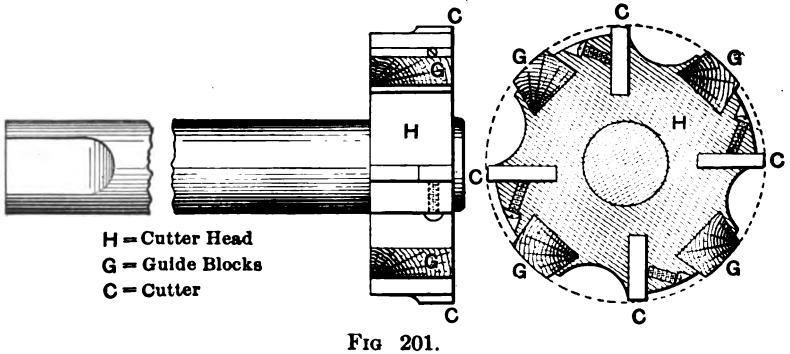

FIG 201.

cast-iron head is always made somewhat smaller than the hole to be bored, leaving the cutters and blocks projecting radially beyond the periphery of the cast-iron head. Having secured the cutters and blocks in the head, the whole is placed in a lathe and turned to the required diameter. The cutters are then taken out, the clearance filed, and cutters tempered and replaced, when the bit is ready for use. For small holes these bits have been largely superseded by forms of bits and reamers previously described, but for very large holes they are still used to some extent.

The object of the wooden blocks is to help steady the bar and to

partially polish the hole. When the wooden blocks become worn they are set out by packing under them with paper. It is essential, in order to get satisfactory results, to have the *wood fit tightly* in the hole. The objection to this form of bit is that the holes made with it are not so uniform in diameter as in the case of the rose-reamer, but the cost of the bits is less.

Holders for Wood Bits.—When made from a flat bar of steel the wood bit is prevented from turning by a kind of U-shaped holder having one long and one short limb. The long limb is held in the lathe tool-post. The larger sizes of bits, in which the cutters are secured in a cast-iron head keyed to a round bar, may be held by a lathe-dog; or if the shank ends be made square, they may be prevented from turning by a common wrench. The wood bit is supported in the lathe by the work and the tail-stock center, the same as a reamer.

Tapering-reamers.—For tapering holes it is necessary to use some form of reamer that cuts on sides only. The rose-reamer, therefore, cannot be used in tapering holes. The tapering-reamer may be made in the fluted form or expansion form, and for rough work it could be made as a half-round reamer. Fig. 202 shows a fluted taper-reamer.

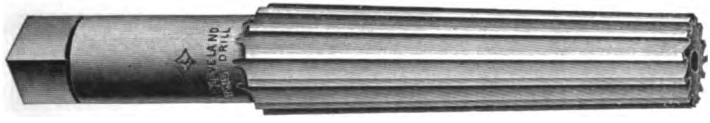

FIG. 202.

When the work is done in the drill-press, the reamer revolves and the work is stationary. In this case, if a roughing taper-reamer is not available, the reamer must be preceded by several drills varying in size according to the taper of the reamer. The smallest drill will be smaller in diameter than the small end of the taper, the largest drill smaller than the large end of the taper, etc. The hole, as left by the drills, will be in steps, which steps are to be cut out by the reamer.

When the work is done in the lathe the reamer is, with few exceptions, stationary and the work revolves. The reamer is supported on the tail-stock center and prevented from turning by a drill-holder or lathe-dog. We may use several drills as in the previous case, or use one drill and rough out the hole with the boring-tool. *If the taper attachment be used* in connection with the latter process, *only one taper-reamer will be required.* In many cases the taper attachment will give satisfactory results without using the reamer at all.

Roughing Taper-reamer. — A roughing taper-reamer will do the preparatory work much quicker than the drills. It may be used both in the drill-press and in the lathe. Fig. 203 shows such a reamer. It

FIG. 203.

differs from the taper-reamer in having its cutting edges notched. These notches are cut with a square-nose tool (of which the corners are slightly rounded) in the form of a left-hand square thread. The tool may be $^1/_{16}$ to $^3/_{32}$ inch wide, and the teeth may be cut from $^1/_{32}$ to $^3/_{32}$ inch deep, according to diameter. The lead of the thread is not important.

Notching the cutting edges gives the reamer a very decided advantage. It relieves the broad bearing, giving the reamer a better "bite."

Considerations Governing the Number of Cutting Edges in a Reamer.—The cutting edges in a reamer may be any number from six to two dozen, according to size and design of reamer. The last operation on the reamer previous to oil-stoning it is to "back it off," or give it body-clearance. This is done by a small revolving emery-wheel, and it is necessary that the cutting edges be far enough apart, so that when grinding one edge the wheel will miss the other edge. For this reason the cutting edges should not be much closer together than $^3/_8$ of an inch, except on very small sizes. Another reason for keeping cutting edges a reasonable distance apart is that *when too close together they clog up with the borings* and make a rough hole.

Shapes of Cutting Edges.—Figs. 204, 205, and 206 show cross-sections indicating various shapes of reamer cutting edges. Fig. 205 is the form most commonly used. In this figure is indicated also the method of grinding the edges. The reamer with edges like Fig. 206 should cut freer than any of the others, but in some cases the teeth seem to spring outward and cut larger than the nominal diameter of the reamer. This is due to the undercut of the teeth indicated by the dotted lines.

Figs. 207 and 208 show end views of two of the forms of reamers for which the Brown & Sharpe Manufacturing Company furnish milling-cutters. Accompanying each of these cuts is a table giving the numbers of teeth for the various sizes of the reamers and the number of the milling-cutter to be used in each case.

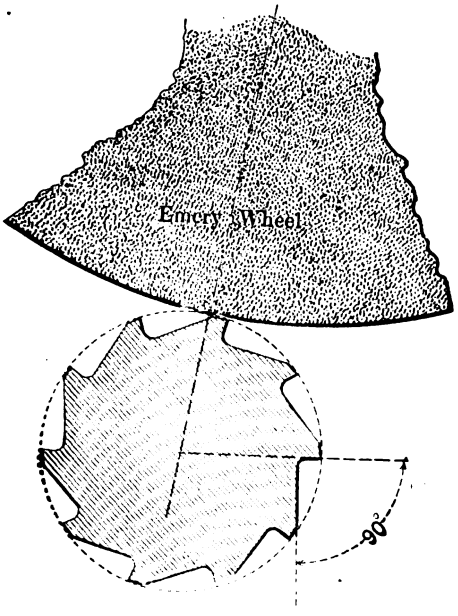

FIG. 205.

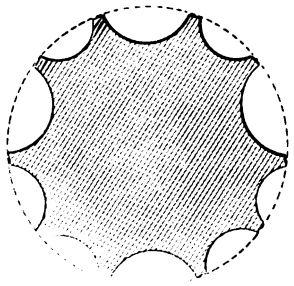

FIG. 204.

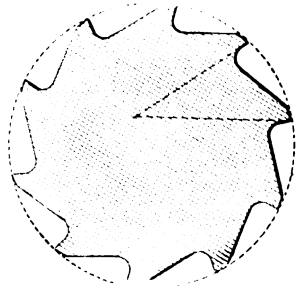

FIG. 206.

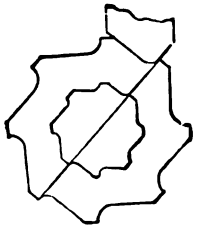

FIG. 207.

No. of Cutter.	Diameter of Reamer.	Number of Teeth in Reamer.
1	$\frac{1}{8}$″ to $\frac{1}{4}$″	6
2	$\frac{9}{32}$″ " $\frac{3}{8}$″	6
3	$\frac{13}{32}$″ " $\frac{1}{2}$″	6
4	$\frac{17}{32}$″ " $\frac{3}{4}$″	6
	$\frac{25}{32}$″ " $1\frac{1}{8}$″	8
5	$1\frac{1}{32}$″ " $1\frac{3}{8}$″	8
	$1\frac{13}{32}$″ " $1\frac{3}{4}$″	10
6	$1\frac{25}{32}$″ " 2″	10

TABLE FOR FIG. 207.

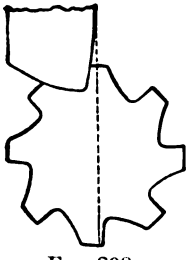

FIG. 208

No. of Cutter.	Diameter of Reamer.	Number of Teeth in Reamer.
1	$\frac{1}{8}$″ to $\frac{3}{16}$″	6
2	$\frac{1}{4}$″ " $\frac{5}{16}$″	6
3	$\frac{3}{8}$″ " $\frac{7}{16}$″	6
4	$\frac{1}{2}$″ " $\frac{11}{16}$″	6 to 8
5	$\frac{3}{4}$″ " 1″	8
6	$1\frac{1}{16}$″ " $1\frac{1}{2}$″	10
7	$1\frac{9}{16}$″ " $2\frac{1}{8}$″	12
8	$2\frac{1}{4}$″ " 3″	14

TABLE FOR FIG. 208.

Fig. 207 is the same shape as Fig. 205, the face lines being radial in both. The shape of the teeth in Fig. 208 is such that they cannot spring outward, but radial-face teeth give practically no trouble in this respect, unless they are cut too deep.

Body-clearance of the Reamer. Causes of Chattering.—The space *A* between the lands of the teeth and the dotted circle in Fig. 209 is called

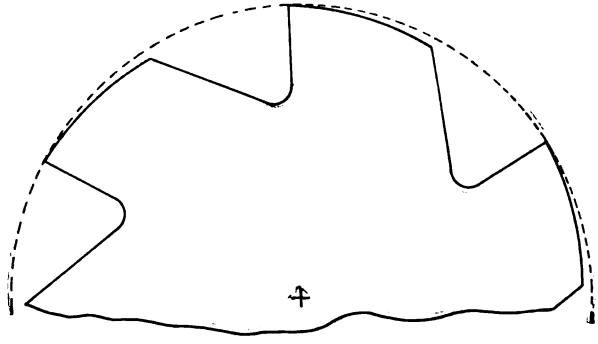

Eccentric Relief.
Fig. 209.

the body-clearance. It should be just sufficient for free cutting. It is very important to observe that *excessive body-clearance causes chattering*, and a chattered hole is never a smooth hole. The body clearance is so little that it is not clearly shown in Figs. 204–8.

The teeth of the reamer illustrated in Fig. 209 are made with "eccentric relief or clearance." The faces are radial, but the lands are arcs of circles the centers of these circular arcs being eccentric to the axial line of the reamer. The Pratt & Whitney Company, who make these reamers, represent that this form of tooth "is stronger," "reams a smoother hole," and "does not chatter." In order to clearly show the difference between eccentric relief and flat relief a few teeth of the latter form are shown in Fig. 210, the scale being the same as in Fig. 209. It should be noted that the body-clearance in both of the figures is too great. It was *purposely exaggerated* for the sake of clearness.

The body-clearance in fluted reamers (rose-reamers are not made with this clearance) should not be *milled* to the extreme edge. A surface of .005 to .020 inch, according to the diameter of the reamer, should be left concentric with the center. For reamers $^5/_8$ to $1^1/_4$ inches diameter an allowance of .010″ will be about right. The clearance is usually brought to the extreme edge by *oil-stoning*. The

stone should have a *true face*, and should never, for this purpose, be used dry. Reamers are commonly made .0005″ large to allow for wear and stoning.

Spacing the Cutting Edges or Teeth.—It is generally understood by tool-makers that a reamer with an *odd number of teeth* will cut a truer hole and chatter less than one with an even number. It has been found, however, that about as good results may be obtained by making the reamer with an *even number unequally spaced.* Fig. 204 is unequally spaced with this object in view. From 2 to 4 degrees will be enough difference. It may be well to note that three spaces of the 27-hole circle will give 1° angle in spiral heads as ordinarily geared.

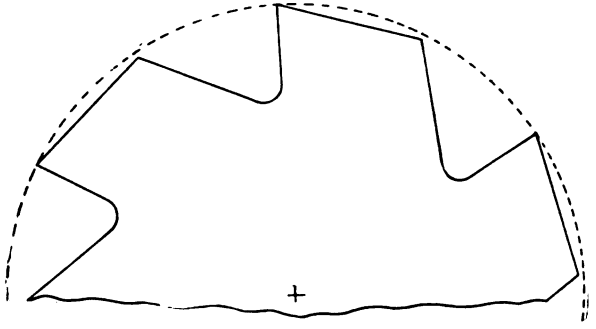

Flat Relief.

FIG. 210.

A fluted reamer having less than five or six teeth is not well adapted to reaming castings in which there are blow-holes. Six teeth or flutes should be the minimum, and an even number will facilitate measuring the diameter of the reamer. *Spirally fluted* reamers give best results in reaming imperfect castings.

Miscellaneous Reamers. — Square, half-round, and one-lip reamers are seldom used in the machine-shop. An exception to the above statement may be made in favor of the center-reamer, but this will receive attention in connection with the subject of lathe-centers.

The square reamer is sometimes used in brasswork, and in exceptional cases it is used in other work. It is possible in an emergency to make a cheap reamer by taking a square bar of steel of the required dimensions and merely tempering and then grinding it on a common emery-wheel. If the bar be slightly too large in cross-section, it may be reduced by grinding two adjacent corners rounding.

Hardening Reamers.—In the processes of manufacturing, a bar of tool-steel becomes *decarbonized* on its outer surface by contact with the oxygen of the air while hot. This surface should therefore be turned off to a depth of not less than $^3/_{64}$". Unless the bar be centered fairly true, the above requirement will necessitate an allowance of nearly $^1/_8$" in diameter for machining. To lessen internal stress and the tendency to curve, it is considered best to turn a portion of this metal off, and then heat and anneal the piece before taking the last cut. This is done whether the metal is soft enough or not in the rough.

If heated for hardening in a common forge, the reamer should be *enclosed in* a piece of *gas-pipe*. For cooling, use water or brine (the latter being preferred) which has been warmed just enough to take off the chill, and plunge the reamer (if of symmetrical section) *vertically* in the water. Holding the reamer over the fire a moment or two when removed from the bath is supposed to lessen its tendency to fracture.

The temper of the fluted reamer may be drawn to straw-color. The rose-reamer may be somewhat harder, or the temper not drawn at all. A hot tube, or other equivalent, may be used for drawing the temper, the reamer being moved back and forth in the tube and rotated at the same time.

Before grinding the reamer the centers should be *carefully cleaned* according to instructions already given.

CHAPTER XI

LATHES

Classification of Lathes. Primitive Form of the Lathe.—Lathes may be classified as hand-lathes, engine-lathes, turret-lathes, and special lathes. The turret-lathe will be described in a separate chapter. In the great advancement of the mechanic arts during the Christian era the lathe in one form or another has been an indispensable adjunct.

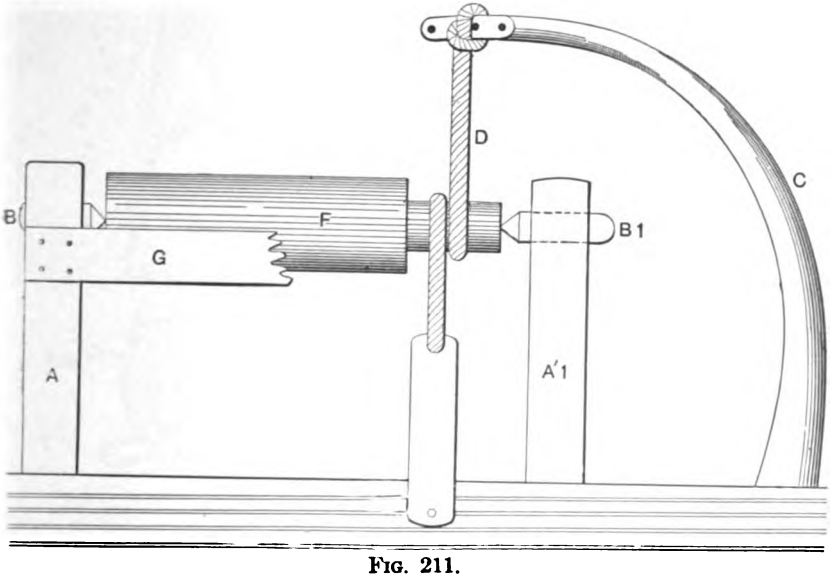

FIG. 211.

It is the oldest as well as the most important machine-tool known to the engineering profession. It would be interesting to trace the lathe from its first conception to its present state of perfection, but the space available will not permit a thorough consideration of this matter. We have, however, prepared a sketch (Fig. 211) of the most primitive form

of lathe, that the reader may be able to observe the contrast between it and the modern type. Referring to the sketch, *A* and *A* 1 are two posts answering respectively to the head-stock and tail-stock of our present lathe, *B* and *B* 1 the centers and *G* the rest or support for the cutting-tool. The treadle *E* is operated by foot-power as in a common sewing-machine. *D* is a rope extending from the treadle to the sapling above, and wrapped one revolution around *F*; *F* is the work to be turned. This lathe was first used for wood-turning, and the piece *F* was made approximately round before it was placed between the centers. The action of the foot on the treadle imparted an oscillating motion to the work, and the cutting-tool was pressed against the work during the downward movement of the treadle. During the upward stroke the tool was withdrawn, allowing the sapling to reverse the motion of the work. Obviously the first improvement likely to be suggested in connection with this lathe would be the substitution of a wooden frame

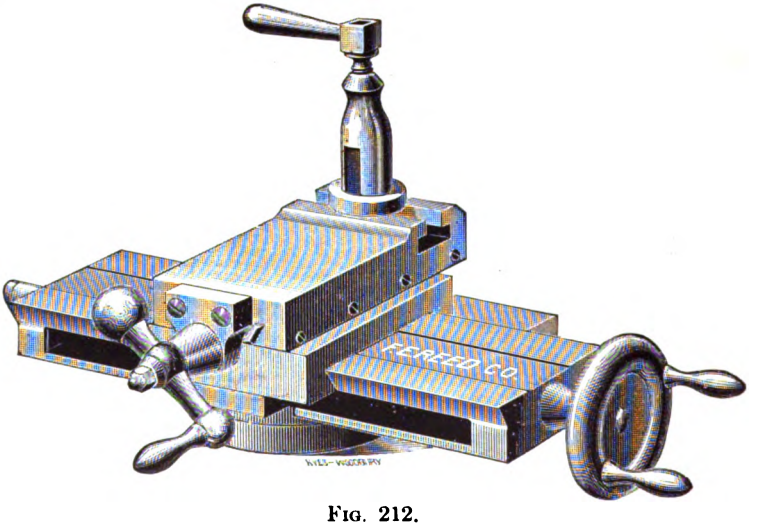

FIG. 212.

for the two posts, and this was done. Also, a beam of suitable shape and material took the place of the sapling. Lathes continued to be used in a more or less crude form for centuries, the cutting-tool being held by hand and supported on a rest substantially as in our present wood-lathe.

The Slide-rest. Hand-lathes.—One of the most important of later improvements is the slide-rest shown in Fig. 212. In this device the cutting-tool, instead of being held by hand, is rigidly secured by a set-

screw, and accurately guided by planed ways. This rest is designed for a *hand-lathe* and is not self-acting.

The hand-lathe is shown in Fig. 213, and it is substantially the same as a common wood-lathe. In the illustration *B* is the bed, *H* the head-stock, *R* the rest, *P* the cone pulley, and *C* the counter-shaft. On most hand-lathes the tool-rest used is similar to that used in wood-turning, and the tool is held by hand in the same manner as in wood-turning.

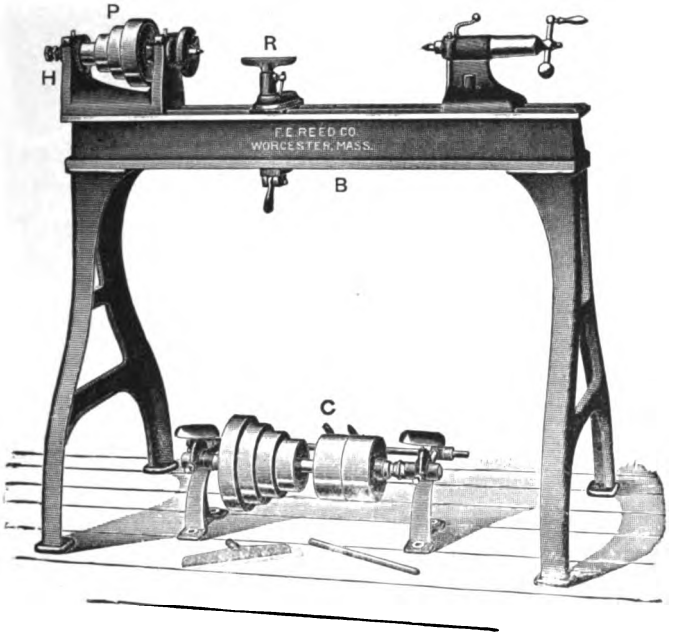

FIG. 213.

But in some of the better classes of hand-lathes the slide-rest mentioned above is used.

The Engine-lathe.—In the modern type of lathe, known as the engine-lathe, the tool is traversed automatically parallel with and at right angles to the axis of the lathe-spindle. Such a lathe is also furnished with a system of *change gears* by which the ratio of tool traverse to spindle revolution may be changed to cut different leads of screws. Fig. 214 shows a good example of this lathe.

Referring to the figure, *B* is the bed, supported on legs as shown. *H* is the head-stock, carrying the main spindle on which run the cone pulley *P* and its pinion *G* 9, and to which are keyed *G* 3 and *G* 8. *T* is the tail-

stock, made adjustable lengthwise of the lathe, and having a spindle also adjustable by means of the hand-wheel *H* 1. *R* is the slide-rest, movable

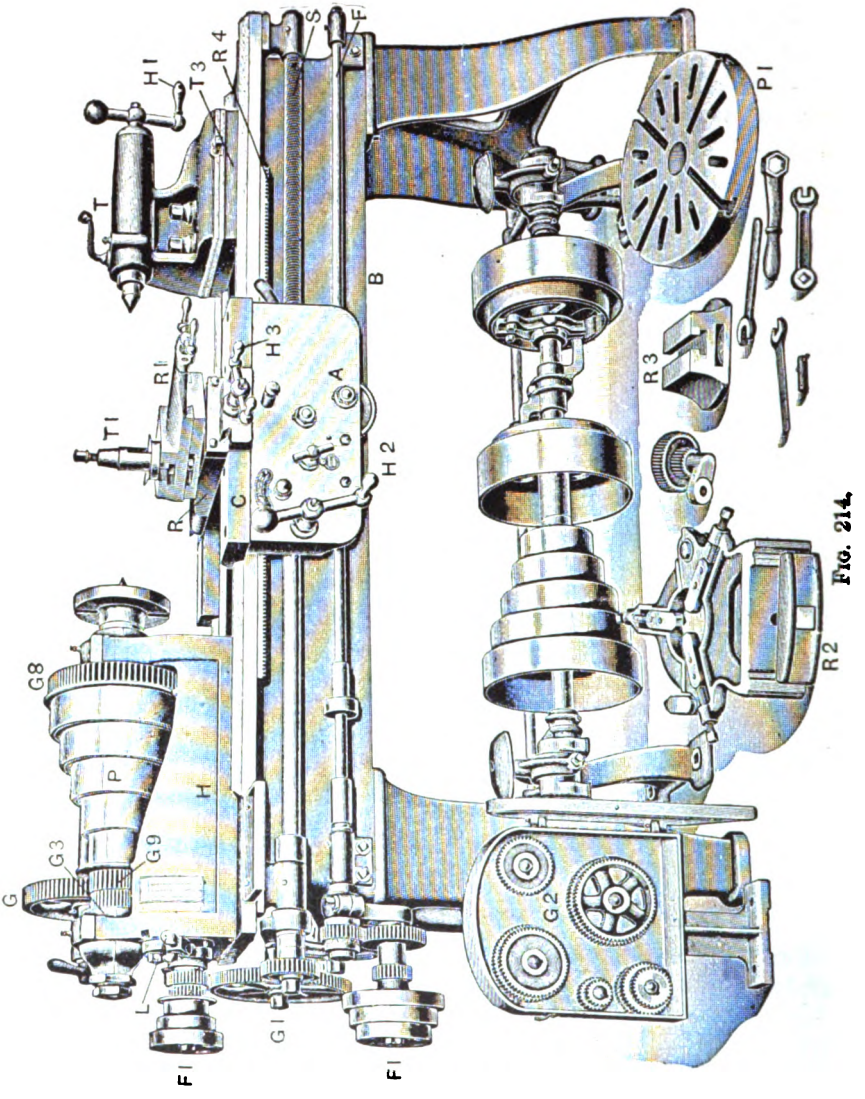

Fig. 214.

on *C* at right angles to the main spindle. Swiveling on *R* is the *compound rest* *R* 1, carrying the tool-post *T* 1, in which is secured, by a set-screw, the tool. *R* 1 is operative at any angle in a horizontal plane.

The apron *A* is bolted to the carriage *C*. Secured to the inner side of the apron is a system of gearing which, in connection with the gearing *G* 1 and pulleys *F* 1, gives automatic movement to the carriage.

The Screw-cutting Mechanism.—When cutting threads (making the helical grooves of a screw) a very exact movement of the carriage is required, and for this purpose the lead-screw* *S*, operated by the gearing *G* 1, is used. This gearing is driven by means of the gear *G* 3 on main spindle, which connects with gearing on the short shaft passing through upper pulley *F* 1. The screw *S* revolves in a threaded box secured to the apron *A*. This box is made in *halves*, which, by means of a handle on the outside of the apron, may be closed upon or released from the screw. The train of gearing *G* 1 may, by means of the lever *L*, be engaged with or disengaged from the gear *G* 3 and also reversed. When engaged, and the screw *S* is revolving, the closing of the threaded box upon the screw causes the carriage *C* with apron *A* to traverse the lathe-bed at a ratio depending upon the lead of the required screw and the change-gears at *G* 1. When the box is open the screw has no effect on the carriage.

The Feed Mechanism.—In order to preserve the accuracy of screw *S* for screw-cutting the feed-rod *F* is used for feeding. This rod is operated by a belt connecting the pulleys *F* 1. On this rod, on the inner side of the apron, is a *worm* which is turned by the rod by means of a feather-key. This key fits the worm with sufficient freedom to permit the worm to slide upon the rod. The worm operates a train of gears, the first of which is a worm-gear, and the last a pinion (small gear) working in a rack *R* 4. The latter is bolted to the lathe-bed, and when the pinion turns it causes the lathe-carriage to traverse the bed parallel with the main spindle. By another system of mechanism, also operated by the feed-rod, the rest *R* is caused to traverse the carriage *C* at right angles to the main spindle. These movements may be started or stopped by handles on the outside of the apron. They may also be effected by hand by means of the handles *H* 2 and *H* 3.

Using the Screw as a Feed-rod.—In some lathes the screw is used for both screw-cutting and feeding, dispensing with pulley *F* 1 and feed-rod *F*. Fig. 215 shows the apron and accompanying mechanism for such a lathe. The threaded boxes *B* 1 are opened and closed upon the screw *S* as before for screw-cutting; but for the ordinary feed the thread upon the screw is not used. For this purpose the *screw is used as a feed-rod*. The worm *W* revolves with the screw, and, engaging with

*The long screw which moves the lathe for thread-cutting is commonly called the lead-screw.

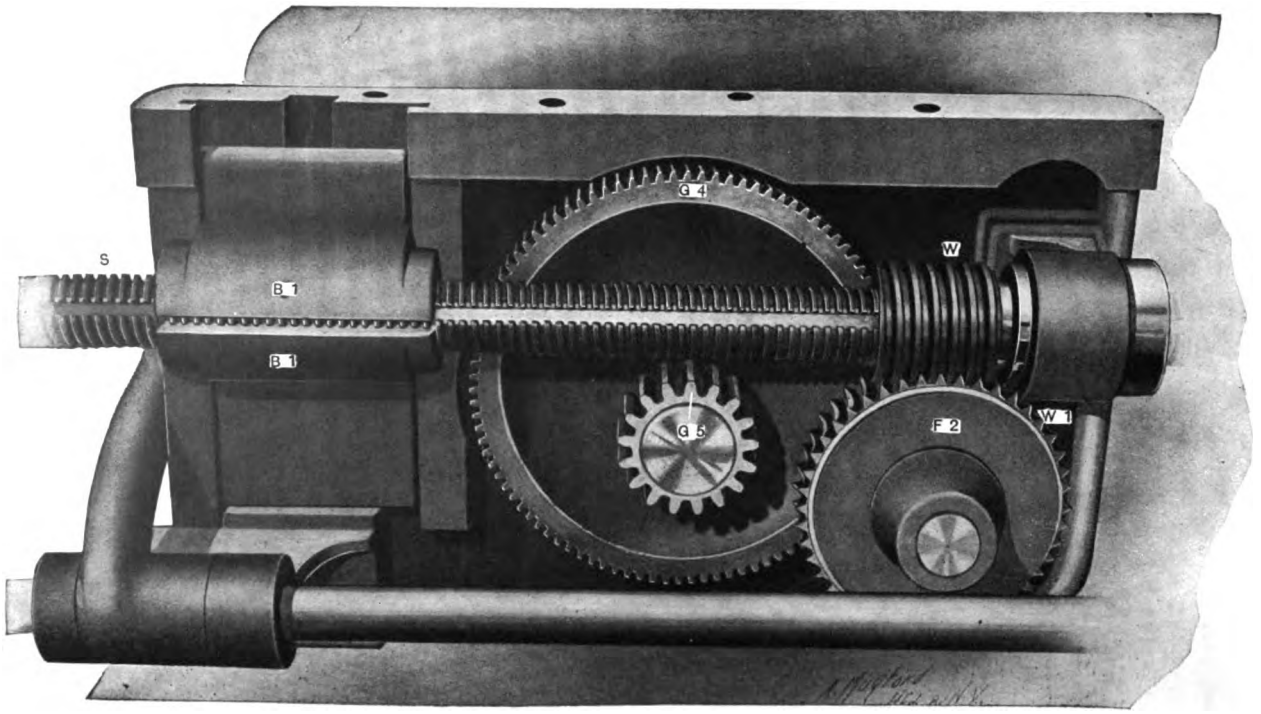

Fig. 215.

the worm-wheel W 1, causes the latter to turn. Secured to the same shaft with W 1 is a small gear G 7, shown in Fig. 216, which engages with G 4. Cast integral with G 4 is G 5, which meshes with the rack R 4 fixed to the bed as in the previous case.

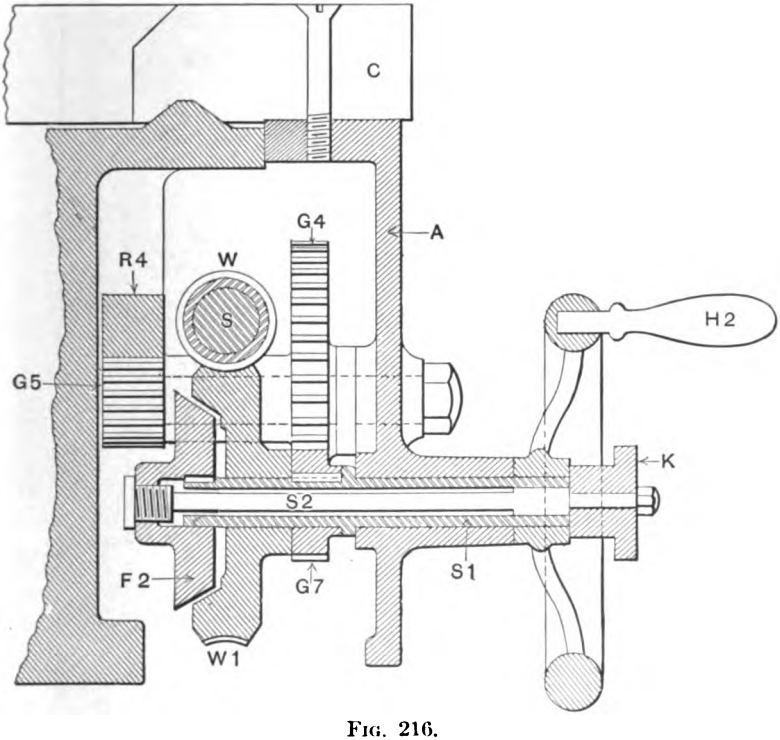

FIG. 216.

Fig. 215 shows only the mechanism for traversing the carriage. Fig. 217 is more complicated and shows both the carriage-feed, and the cross-feed mechanism for rest R. The latter is effected by gear G 6 meshing with a small gear on cross-feed screw.

Reverse Gears under Head-stock.—In the system just described, which is quite different from that shown in Fig. 214, the carriage is in some lathes reversed by miter-gears under the head-stock. The mechanism for this purpose is shown in Figs. 218 and 219, and the lathe of which it is a part is shown in Fig. 222. In Figs. 218 and 219 a, b, c, and d are part of a train of gears for operating the lead-screw; c is not connected directly to the shaft S 3, but is secured to the hub of the miter gear g,

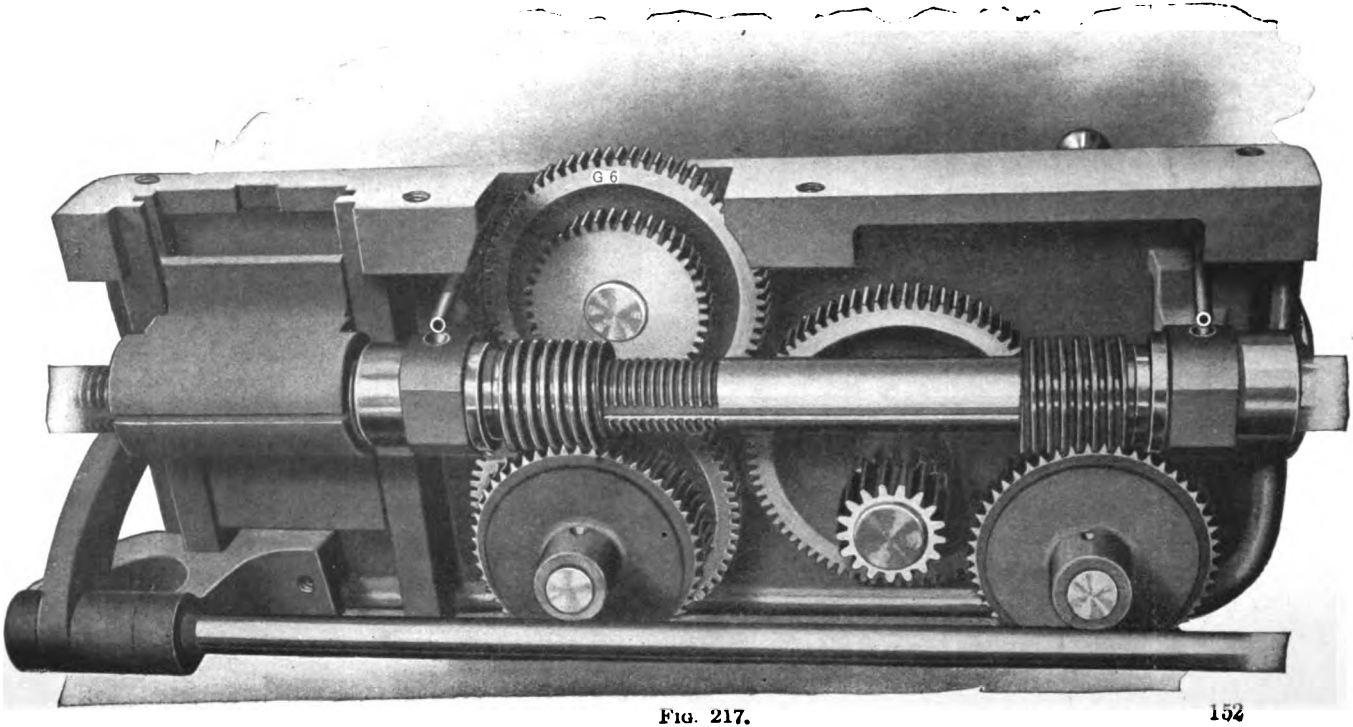

Fig. 217.

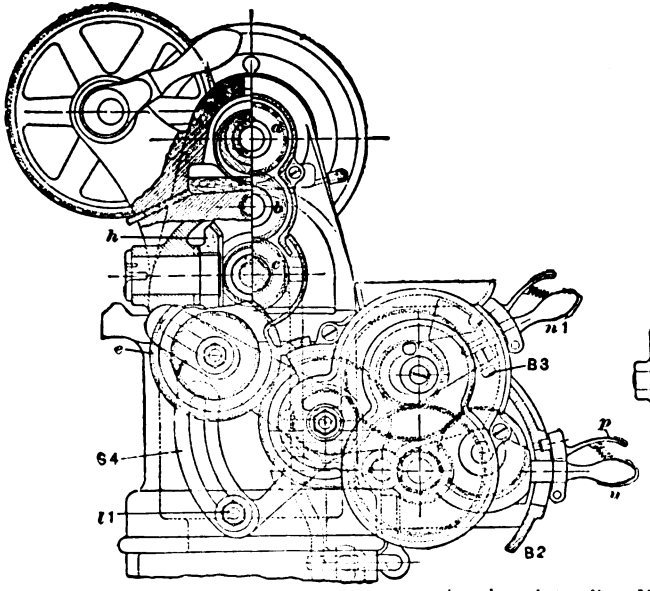

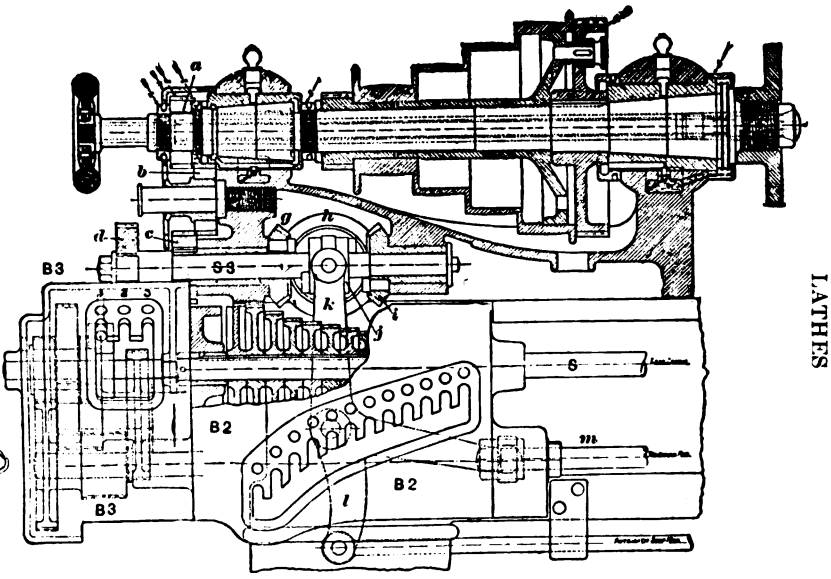

Sectional and Outline Views of Lathe Head and Gear Box.

FIG. 218. FIG. 219.

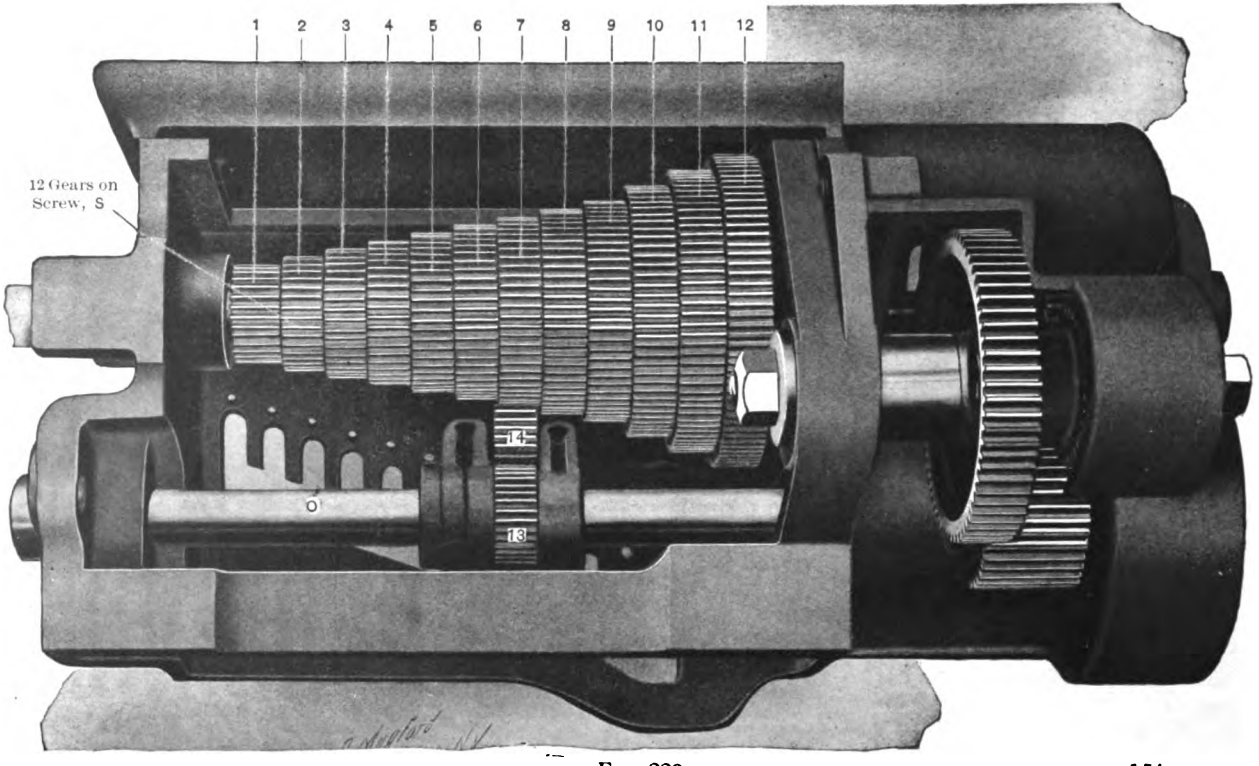

FIG. 220.

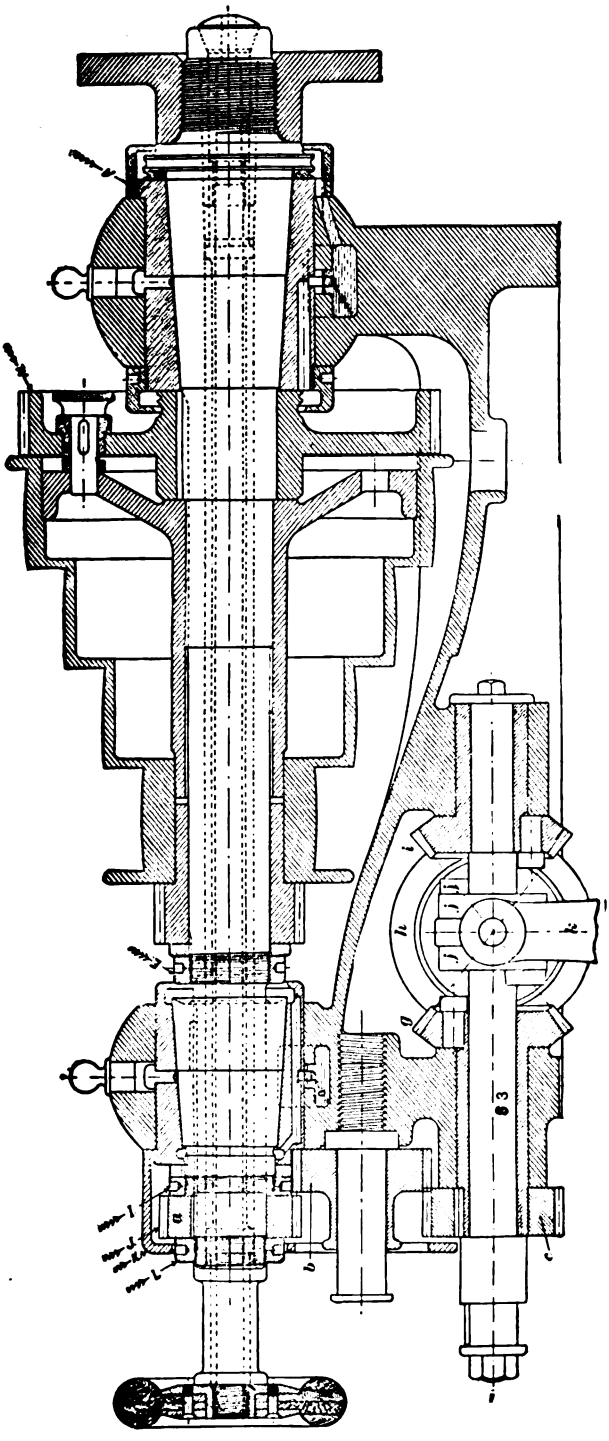

FIG. 221.

through which shaft S 3 passes, g being journaled in the head-stock as shown. This gear meshes with the miter h, which in turn drives i. Between the gears g and i, and driven by a feather-key in shaft S 3, is clutch j. This clutch has two projecting lugs (one at each end), and the gears g and i have similar lugs, which are designed to engage the lugs on j. The clutch may be held in a neutral position, or may be engaged with either g or i by means of the levers k and l, which are connected to a lever on the lathe-apron by means of the rod m. The gears g, h, i are running whenever c is, and if the clutch be moved to engage with g, it (the clutch) will revolve with g; if it engage with i, it will revolve with i, which, from the nature of the connection, is in an opposite direction to that of g.

As the clutch j is secured by a feather-key to the shaft S 3, the latter must turn when the clutch turns and, with the foregoing description, there should be no difficulty in understanding how to obtain two opposite motions of shaft S 3. The clutch and miter-gear mechanism above referred to is more clearly shown in Fig. 221.

An Improved Gearing System.—It remains to show the mechanism connecting shaft S 3 with the apron-gearing. Figs. 218, 219, 220, and 222 show one of the modern gearing systems for this purpose. In using lathes of the old type it is necessary to take off and put on *change-gears* for each particular lead of thread to be cut. But in the lathe under consideration thirty-six different leads may be cut without detaching any gears. The construction provides also for the use of *change-gears*. This last provision makes it possible to cut, in addition to the thirty-six threads, many other leads, the range being limited only by the number of extra change-gears supplied.

It may be well to give a detailed description of this system. On the lead-screw S, Figs. 219, 220, and 222, we have a "cone of gears" which are marked 1 to 12 in Fig. 222. On shaft o of the last-mentioned figure is the gear 13, which with its intermediate, 14, may be moved along and rotated through a short arc on the shaft by the lever n (Fig. 218). By this means gears 13 and 14 may be brought into engagement with either of the gears marked 1 to 12, and when in position they may be locked by the spring lock p (Fig. 218) which engages with any of the holes shown under the cone of gears in Fig. 219. Fig. 222 shows gears 13 and 14 in position to drive gear 7. If now these gears be set in motion (the ratio up to this point being assumed 1 to 1), the lead-screw S (Figs. 219 and 220) will revolve at a ratio with the lathe-spindle, depending upon the ratio of the diameter of gear 13 to gear 7. And similarly, if the two

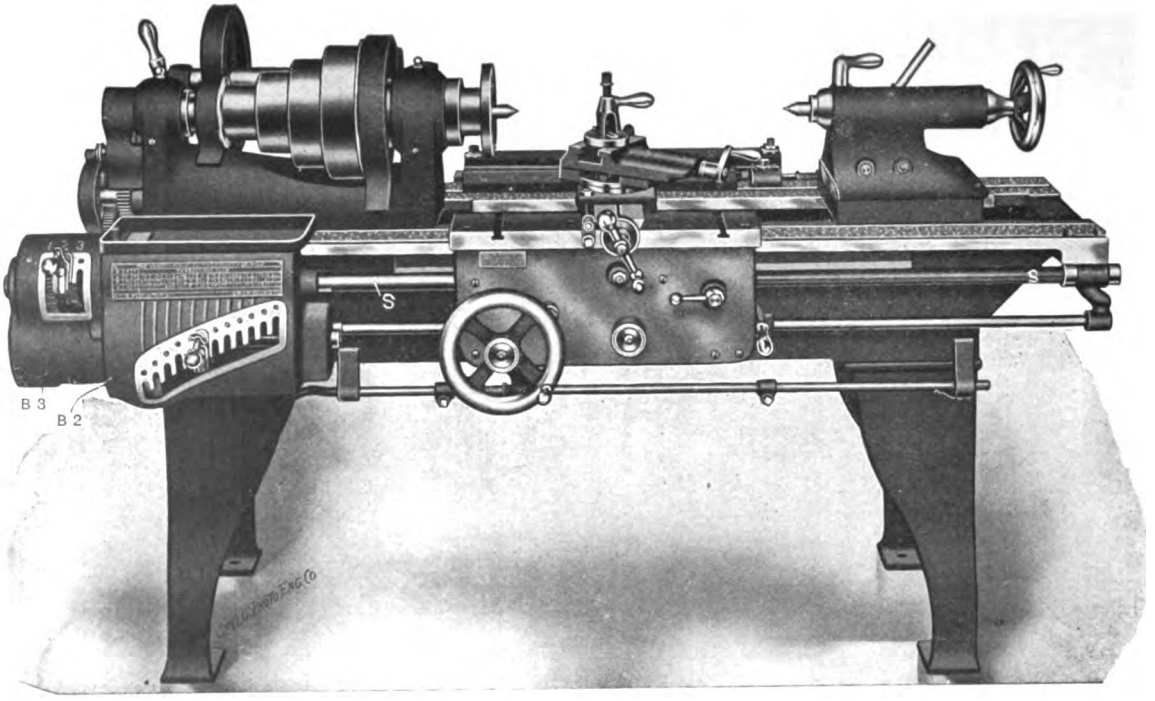

FIG. 222.

sliding gears be caused to engage with any other one of the gears 1 to 12, the ratio will be changed, its value being shown on an index plate secured to the lathe.

In the gear-box B 3 (Figs. 218 and 219) is a second nest of gears, which are controlled by the lever n 1. These give three changes, the three positions of the lever being indicated by the numbers 1, 2, and 3 on the gear-box. The gears in gear-box B 3 drive those in B 2 and the combination of the two sets of gears provide for the thirty-six changes; that is to say, that for each position of the lever n 1 twelve different threads are cut.

Connection is made between the gears in box B 3 and the "stud gear" d (Fig. 219) by two gears, e and f. These are keyed to a quill shaft which runs freely on a stud secured to the sector S 4 (see Fig. 218). The gear f, which is on the outer end of the quill, is one of the change-gears referred to above, and the sector is slotted and locked at L 1 in the usual manner to admit of the use of various sizes of change-gears.

Quite a number of speed-changing devices have been introduced during the past 15 years, but they do not differ greatly from the one just described. Some of these devices are shown in connection with other machines in this work, and most of them have been illustrated in "The American Machinist," in "Machinery," and other technical journals.

The Feed-clutches.—In the mechanism just described the feed, as previously stated, is effected by the lead-screw which is, for this purpose, operated by *gearing* as a feed-rod, just as though there was no thread on it. The means of disengaging the feed is shown in Fig. 216. Referring to this figure, W 1 is the worm-gear shown in Fig. 215, and F 2 is the friction-clutch driven with the shaft S 1 by means of the feather-key. Near middle of shaft S 1 is tightly keyed the small gear G 7, which gear is hid behind W 1 in Fig. 215. By means of the small threaded shaft S 2, which passes through S 1, and its knob K, the clutch F 2 may be caused to engage with the beveled bearing of W 1. If now screw S revolve, the train of gearing will cause the carriage to traverse the lathe-bed. When the clutch F 2 is released, the worm-gear turns loosely on shaft S 1 and has no effect on the other gears.

As has been stated, this system requires neither feed-belt nor feed-rod.

Bevel-gear Reverse in Apron.—The apron mechanism in Fig. 223 differs but little from the common form. It is similar, however, to that last described with respect to the lead-screw, which is used for both screw-cutting and feeding. The lead-screw passes through the bevel-

gears *G* 13 and *G* 14, which are in one forging, and a feather-key in these gears engages with a spline cut nearly the whole length of the lead-screw. The bevel-gears thus revolve with and slide upon the lead-screw. *L* 2 is shifted by a hand-knob on the outside of the apron, and, in connection with yoke *Y*, moves the gears *G* 13 or *G* 14 into mesh with *G* 15, or to a neutral position. A pinion on the back of *G* 15 engages *G* 16; and *G* 17, being operated by *G* 16, causes *G* 18 and *G* 19 to turn. The

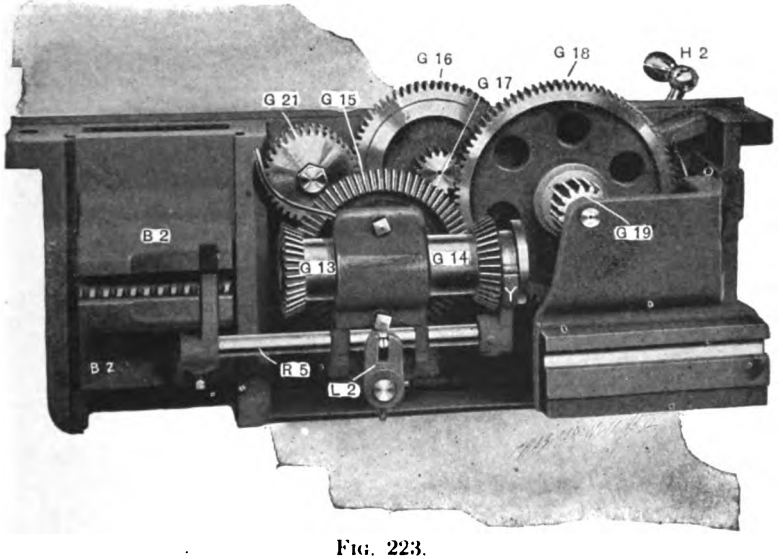

FIG. 223.

latter meshes with the fixed rack on the lathe-bed, and thus the carriage is caused to traverse the bed when the nut *B* 2 is not closed upon the revolving lead-screw.

The carriage is moved by hand by a handle *H* 2 on the outer side of the apron, which handle operates a pinion meshing with gear *G* 18.

G 21 operates the cross-feed, and both *G* 21 and *G* 16 may be disengaged by clutches and knobs similar respectively to *F* 2 and *K* in Fig. 216.

Analysis of the Back Gear of a Lathe.—Fig. 224 shows the back gear and cone pulley in section, together with their connecting parts. *S* 3 is the main spindle to which is tightly keyed *G* 8. The cone pulley *P*, which is keyed to the small gear *G* 9, *runs freely on S 3 except when clamped to G 8* by bolt *B* 2. When thus clamped the back gears *G* and *G* 10 must be disengaged from *G* 8 and *G* 9, when the spindle *S* 3 is driven

directly; that is, it runs 1 to 1 with the pulley *P*. The lathe is now said to be *out of gear*. To put it in gear, disconnect *P* and *G* 8 by removing the bolt *B* 2. By means of the eccentric shaft *S* 4 and

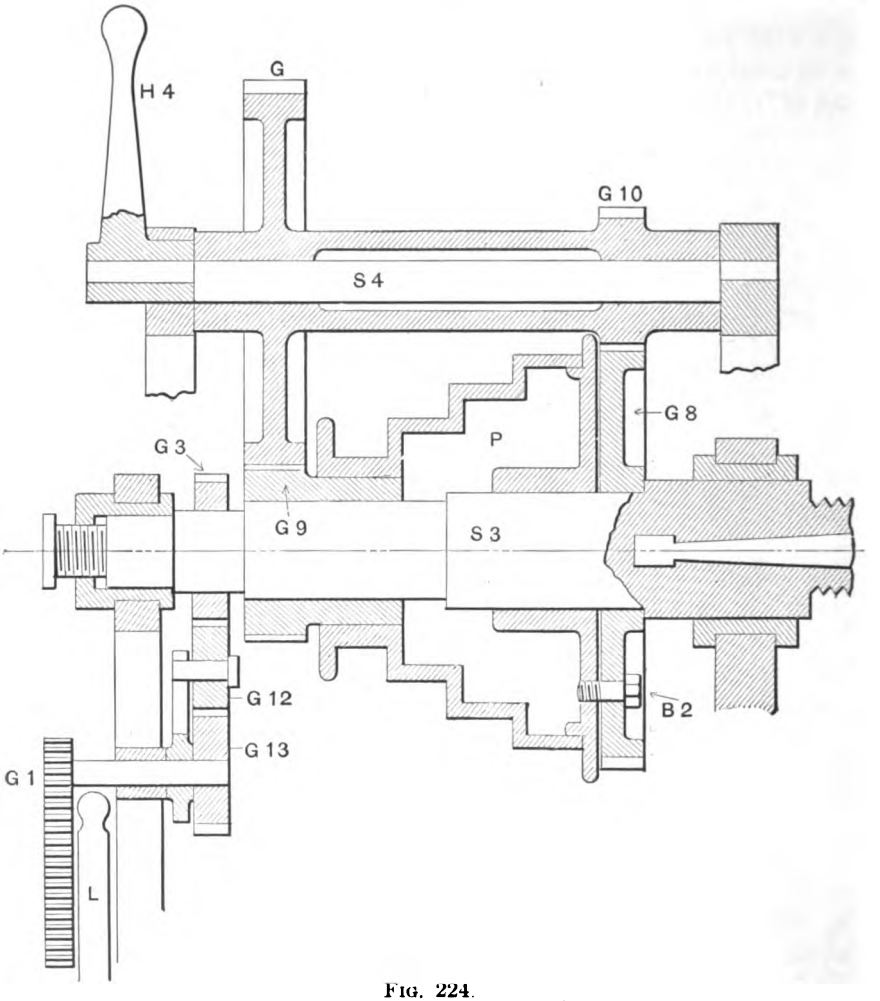

FIG. 224.

handle *H* 4, bring *G* and *G* 10 into mesh with *G* 8 and *G* 9. The spindle *S* 3 will now run at a slower speed than the pulley *P*. Let us clearly understand why it will run slower. Suppose *G* 9 has, say, 20 teeth and *G* 60 teeth. Now when *G* 9 makes one revolution *G* will make

$^{20}/_{60}$ or $^{1}/_{3}$ revolution, and *G* 10 will make the same. Suppose, again, *G* 10 has 20 teeth and *G* 8 60 teeth; now when *G* 10 makes $^{1}/_{3}$ revolution *G* 8 will make $^{1}/_{3} \times {}^{20}/_{60} = {}^{1}/_{9}$. In other words, the ratio of revolutions of *S* 3 to $P = \frac{G\,9}{G} \times \frac{G\,10}{G\,8} = {}^{20}/_{60} \times {}^{20}/_{60} = {}^{1}/_{9}$. With a four-step cone we should have four speeds in gear and four out of gear, making eight speeds in all, and these speeds should be in *geometrical progression*.

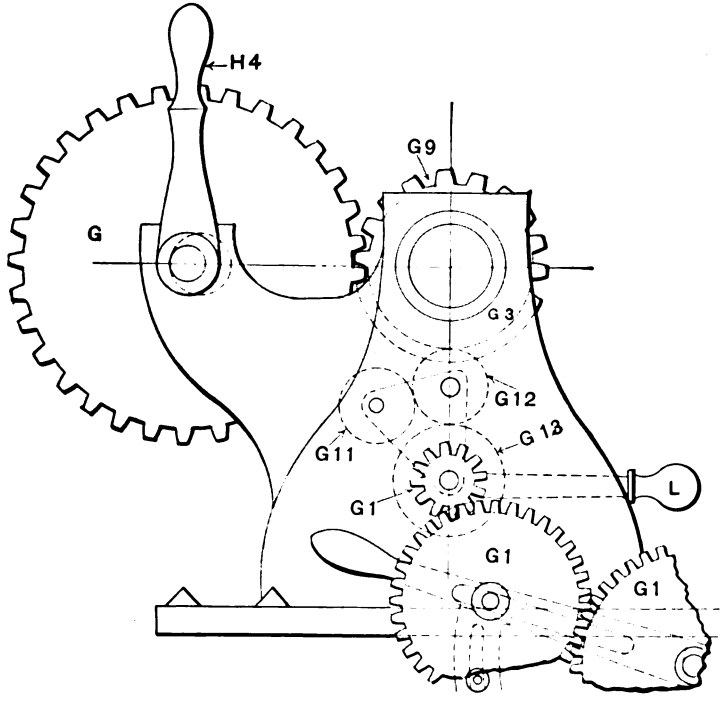

FIG. 225.

Spur-gear Reversing-mechanism. — In connection with Fig. 214, it was stated that the train of gears *G* 1 could be disengaged from the gear *G* 3 on the main spindle, or reversed. The means of effecting these changes will now be explained. Referring to Fig. 225, the three gears marked *G* 1 are the same train of gears that are designated *G* 1 in Fig. 214. The uppermost of these three gears is on the short shaft which carries one of the feed-cones, and which passes through the head-stock. Inside the head-stock and on this same shaft is a gear *G* 13 (Fig. 224), with which *G* 12 engages. Meshing with *G* 12 is *G* 11, and *G* 12 and

G 11 may be rotated through a short arc on the axis of the upper gear G 1 by the lever L, both of these gears being supported on a swinging bracket. When lever L is raised it brings G 12 into mesh with G 3 (Fig. 224), and the train of gears G 1 are driven in a forward direction. When lever L is depressed G 12 is disengaged from G 3, and G 11 is brought into mesh with the latter. We now have *four* gears in mesh, not including those on the outside of the headstock. This is a very common method

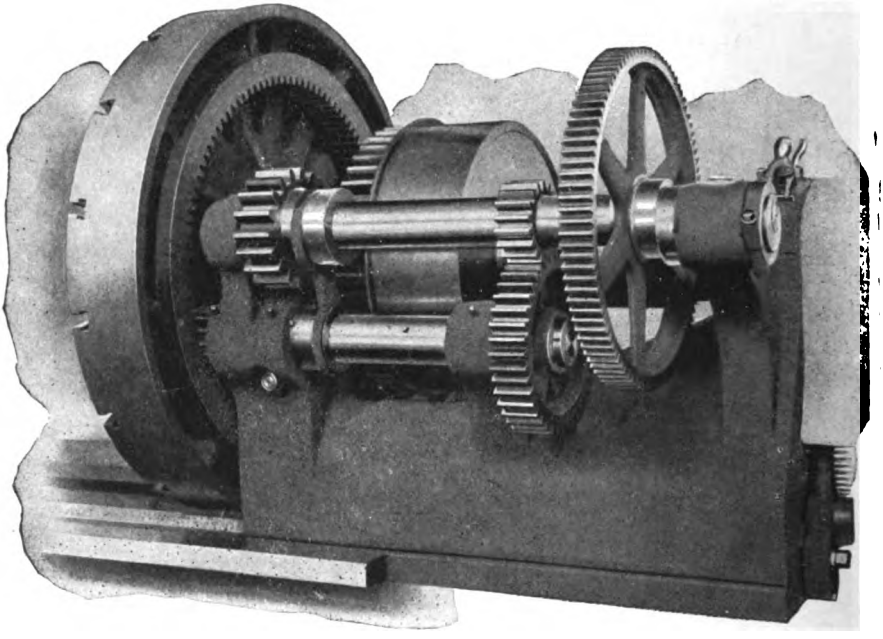

FIG. 226.

of getting *two opposite motions* by spur-gears. It should be noted that G 11 runs idly when G 12 is in mesh with G 3, but that G 12 is driven by G 11 when the latter is in mesh with G 3. By placing the lever in an intermediate or neutral position, both G 11 and G 12 are disengaged from G 3, and the train of gearing becomes inoperative. The middle gear G 1, which is known as the "intermediate" gear, turns freely on a stud held in a slotted sector as shown. The sector itself is also held to the head-stock by one bolt passing through the slotted projection. The object of this arrangement is to provide the adjustment necessary in using different sizes of "change" gears. The student should observe the difference between this method of getting two opposite motions and that referred to in connection with Fig. 219.

Triple-gear Lathe.—It should be understood that the object of the back gearing in a lathe is to give a higher velocity ratio between the belt and the lathe-spindle. On the larger lathes this velocity ratio is still further increased by the addition of another shaft carrying two additional gears. Fig. 226 shows a rear side view of a lathe head-stock with *triple* gears. The triple-gear shaft is seen directly under the regular back-gear shaft, and it is driven by a gear on the latter. This triple-gear shaft drives the main spindle of the lathe by means of a pinion

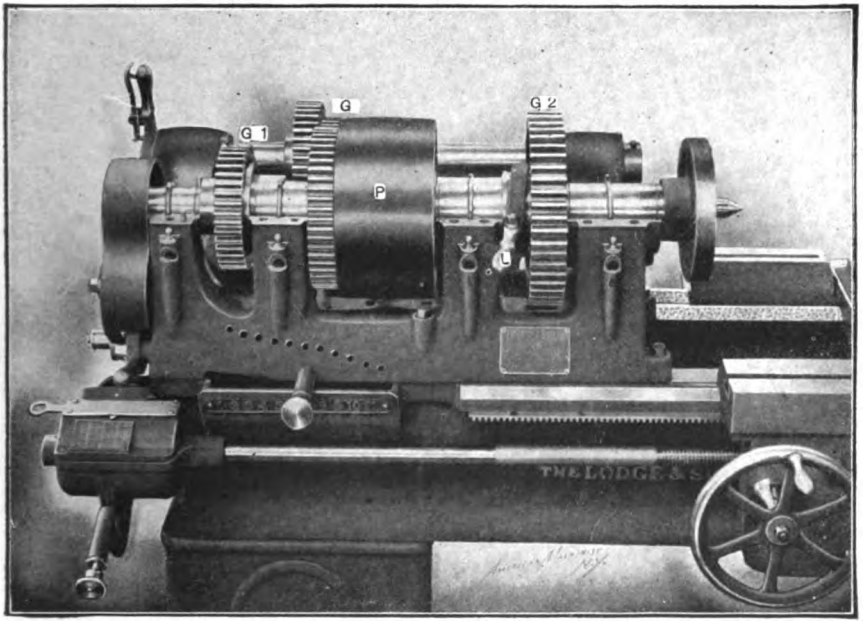

FIG. 227.

which engages with the *annular* gear shown on the back side of the lathe face-plate.

Geared-head Lathes.—In the chapter on Drilling-machines allusion was made to the tendency to substitute tooth-gearing for the main cone pulleys in machine-tools. Fig. 227 shows the new head-stock of the Lodge and Shipley lathe, embodying this principle. Instead of the cone pulley there is one wide-faced pulley. This pulley has no bearing on the main spindle, but is secured to a hollow shaft which is journaled in the two bearings shown. At the left side of the pulley and keyed to the same hollow shaft are two gears *G* and *G* 1 of different

sizes. The main spindle of the lathe passes through the hollow shaft mentioned, but does not touch it, being journaled in the two outer bearings. Near the left end of the back-gear shaft are two sliding gears, either of which may be engaged with its mating gear on the hollow shaft to which the pulley is secured. When not in use these sliding gears are located between the two gears of the pulley-shaft. The two pairs of gears, in connection with the pinion on the right end of the back-gear shaft and its mating gear *G* 2 on the spindle, give two speeds to the spindle. The back-gear shaft is thrown out of mesh by the usual eccentric arrangement, and when thus disengaged the pulley-shaft may be locked by a clutch to the main spindle, the clutch being operated by the lever *L*. This direct connection gives another speed, making three speeds in all. There are three different speeds on the counter-shaft, and thus the lathe is provided with nine speeds.

In Fig. 228 the main spindle with its gear *G* 2 is shown removed from the bearings, exposing the clutch-teeth on the pulley-shaft.

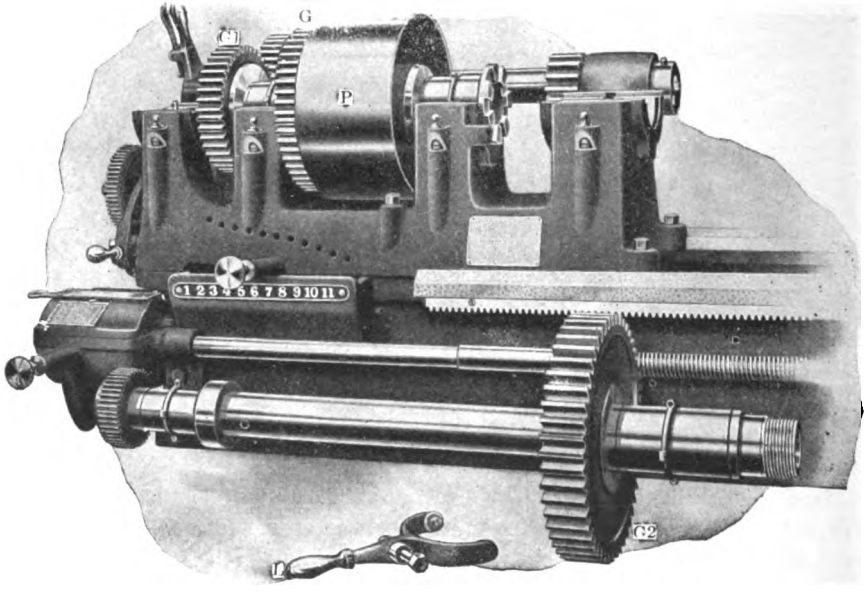

FIG. 228.

Being relieved of the belt-pressure, the durability and accuracy of the spindle-bearings in this lathe are considerably increased.

Fig. 229 shows a lathe designed with special reference to the re-

quirements of the "high-speed" steel. In this lathe the geared head is not employed, but a cone pulley with three *wide* steps of large diameter

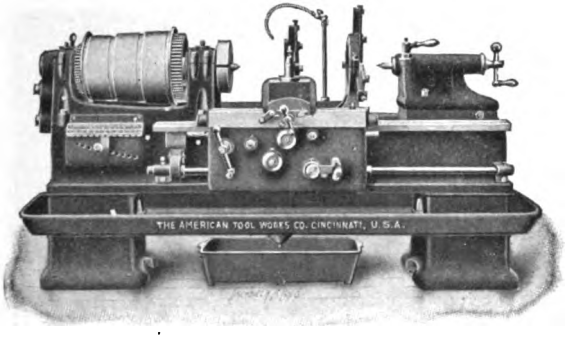

FIG. 229.

is used. This lathe is referred to in the catalog as the "American High-speed Lathe." The lathe shown in Fig. 227 is well adapted to high-speed tools.

Raise-and-fall Rest. — The ordinary slide-rest of the engine lathe is so constructed that the cross-feed slide cannot be raised. The means for adjusting the tool vertically requires that the set-screw holding the tool be slackened. When the set-screw is slackened the point of the tool may be raised or lowered by slightly rotating a convex gib in a concave washer. Fig. 230 shows a rest which has the last-named method of adjusting the tool, which method is clearly indicated in the cut, and in addition thereto it has a means of adjusting the tool by raising the rest itself. When adjusted the rest may be bolted firmly in position in connection with the bolt and slot shown. Just above this bolt is also seen a handle for raising the rest.

The raise-and-fall rest is preferred by some mechanics for the smaller lathes, but it is not well adapted to the heavier lathes.

The Plain Rest.—The plain rest shown in Fig. 231 differs from the rest on the lathe in Fig. 214, in that it lacks the upper slide of the compound rest. Its cross-slide, therefore, cannot be fed in any other direction than at right angles to the lathe axis. This is a disadvantage on many kinds of work, but the *extra rigidity* possible in this kind of rest compensates in part for the lack of the angular feed.

The Compound Rest.—The compound rest which has been referred to in connection with Fig. 214 is shown in detail mounted upon the lower slide-rest in Fig. 232. Properly speaking the combination of

R and *R* 1 constitute the compound rest, but the term is often used

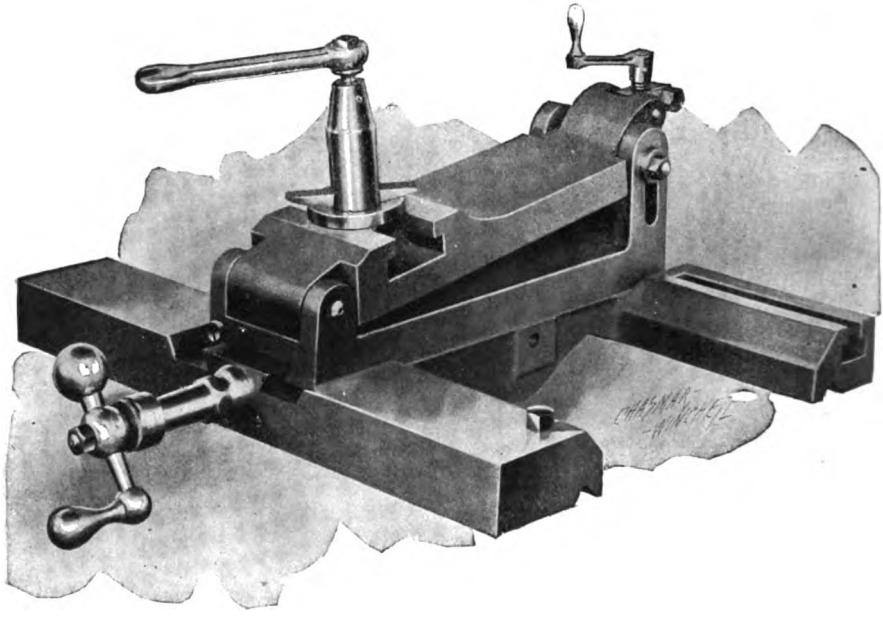

FIG. 230

to refer to *R* 1, which swivels on *R*. The graduations for setting the rest for angular feed, and one of the bolts for clamping it, are clearly

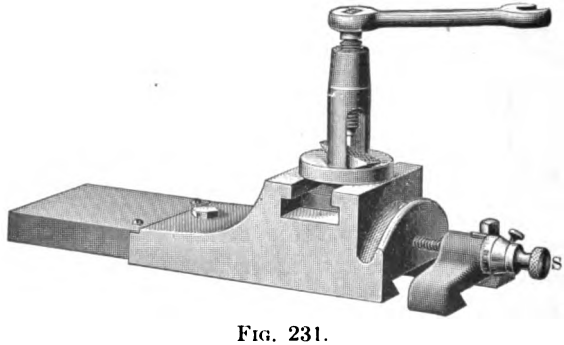

FIG. 231.

shown in the cut. Many manufacturers so design the lathe-carriage that either the plain rest or the compound rest may be used.

The Elevating Tool-rest.—There have been invented a great many different tool-rests with the object of overcoming the difficulty referred

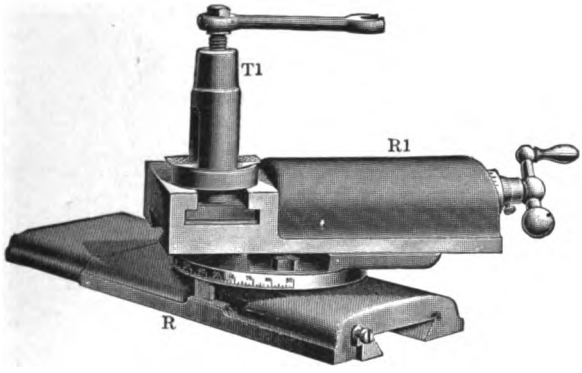

FIG. 232.

to in connection with the ordinary slide-rest. Fig. 233 shows one of these designs. The rest is raised by the screw seen projecting just above the tool.

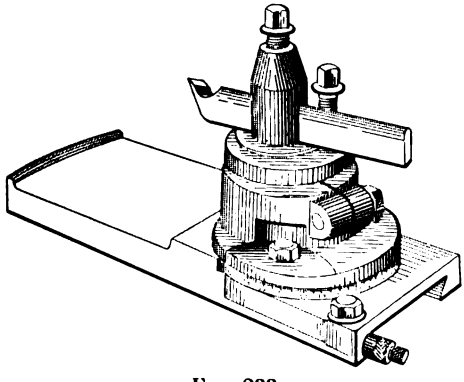

FIG. 233.

The Open-side Tool-rest.—In the ordinary tool-post the lathe-tool is held by one set-screw. It may be more rigidly held, however, by two set-screws, as shown in the tool-post in Fig. 234. The third set-screw shown is used for clamping the upper part of the block to the next lower part. By slacking this third set-screw the tool may be swung around to any angle and then clamped.

Three-tool Shafting-rest.—This device is shown in Fig. 235. As indicated by its name, this rest is designed more particularly for turn-

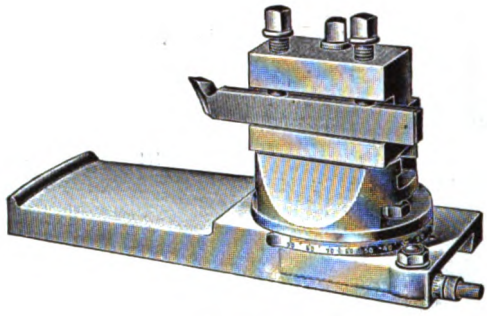

FIG. 234.

ing long shafting. For this purpose two of the tools may be used for roughing cuts and the third tool for smoothing cuts, the shaft being

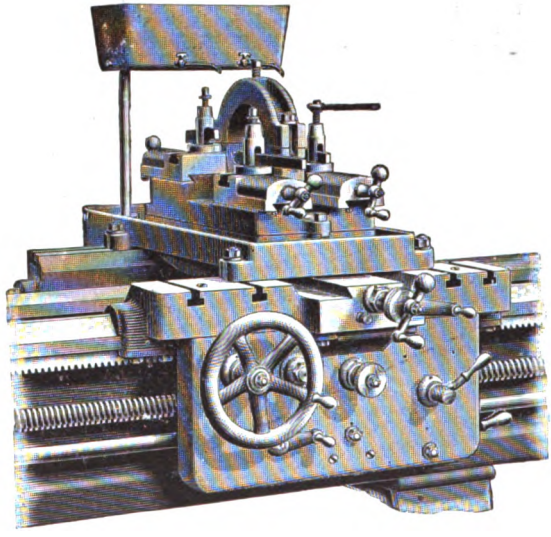

FIG. 235.

finished at one traverse of the lathe-carriage. While being turned, the shaft is kept cool with water supplied from the tank shown. The ring-shaped casting shown under the tank is a kind of follower-rest which travels with the carriage, and supports the shaft against the pressure of the tools. It is designed to receive bushings for different

sizes of shafts, which bushings are held by a set-screw on the top of the casting. As indicated in the cut, this attachment is held to the

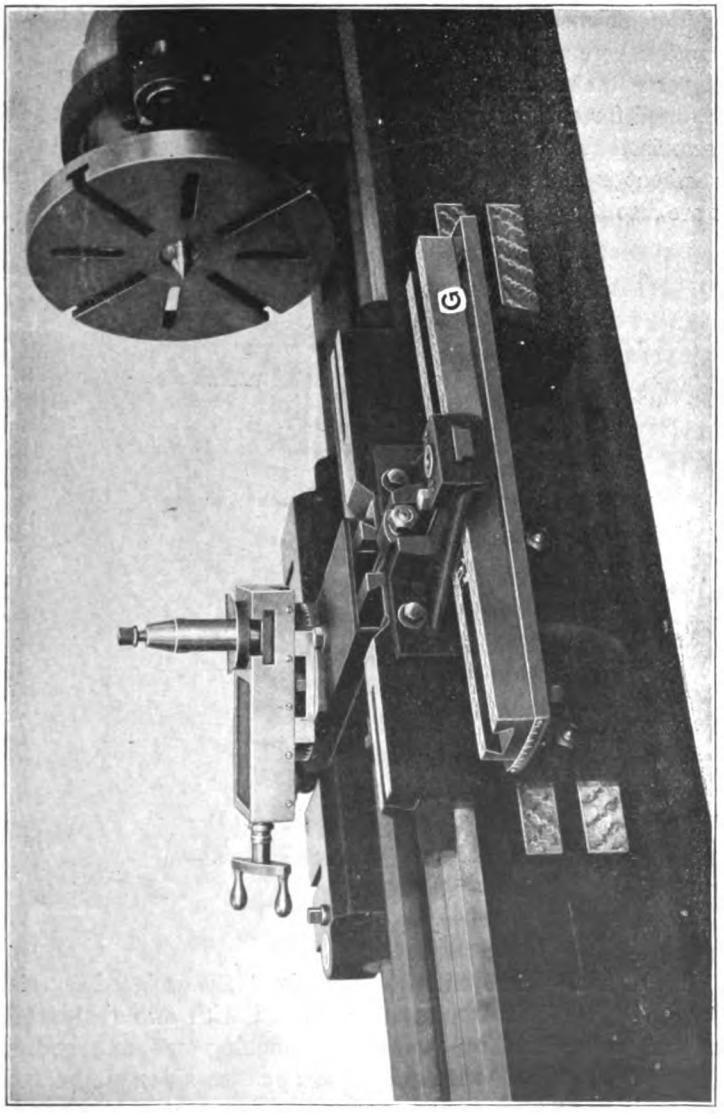

FIG. 236.

lathe-carriage by four bolts, and it may be removed and replaced by the ordinary cross-slide.

The three-tool shafting-rest is one of the distinguishing features of a special shafting-lathe. Such a lathe is usually provided also with a screw-press for straightening shafts. In other respects the shafting-lathe is not sufficiently different from the common lathe to justify a full description here.

The Taper Attachment.—The taper attachment shown in Fig. 236 is a device used for causing the tool to move to or from the work while the lathe-carriage moves longitudinally, the object being to turn tapers. This attachment is more particularly described in the chapter on Lathe Work, as are also the steady-rest and follower-rest.

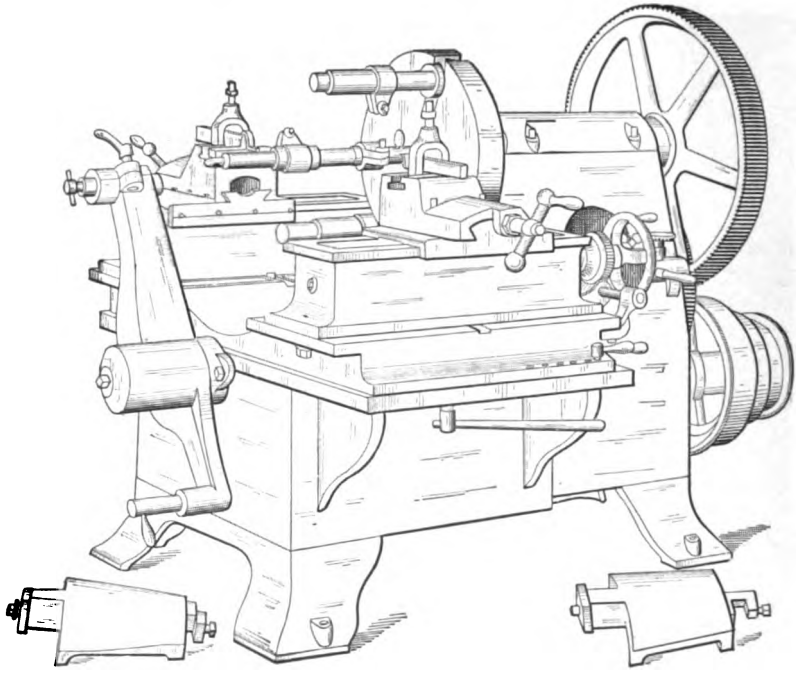

FIG. 237.

The Pulley-lathe.—The lathe shown in Fig. 237 is designed especially for turning pulleys. This machine is provided with two tool-rests so that a roughing and a finishing cut, or two roughing cuts, may be taken simultaneously. As the two rests are on opposite sides of the lathe, one of the tools must be inverted. The arm shown at the left end of the lathe is a kind of tail-stock which may be swung around on its axis to admit of more convenient removal of the pulley. The latter while

being turned is held on an arbor one end of which is supported by the tail-stock, the other end being fitted to the hollow spindle of the lathe. This makes the arbor more rigid than if held at both ends on centers. The pulley is rotated by two drivers seen bolted to the face-plate of the machine, which drivers engage with two of the arms of the pulley. To facilitate *crowning* the pulley, the rails supporting the two rests are mounted upon a substantial bed-plate which may be swung upon a pivot and clamped at the required angle.

The Pit-lathe (Fig. 238).—This is a very heavy and powerfully geared lathe. It is designed for machining fly-wheels and other heavy work of

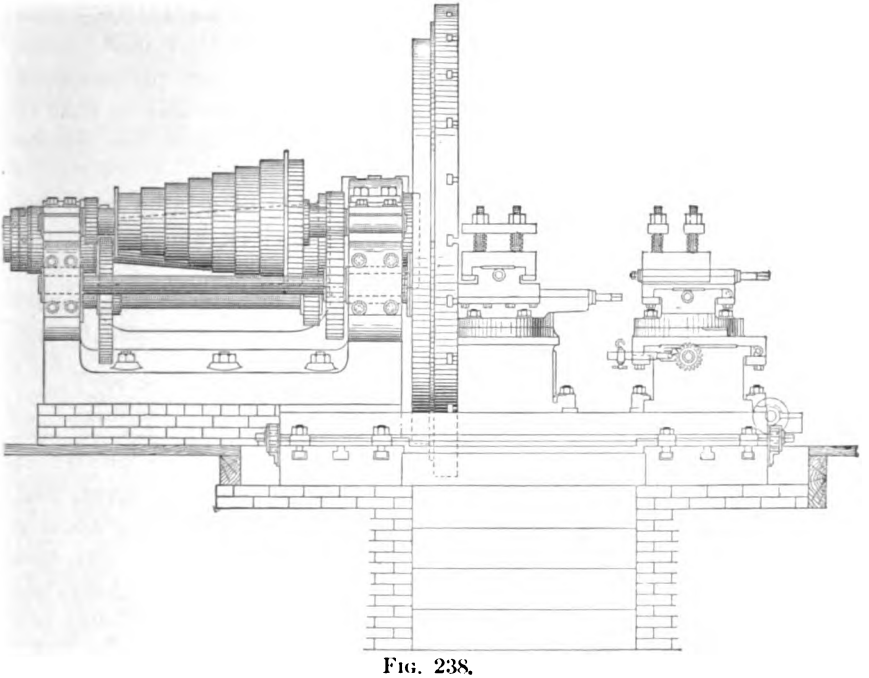

FIG. 238.

which the diameter is large and the length inconsiderable. Work of this character is always bolted to the large face-plate, which swings in the pit as shown. The head-stock and other framework of the lathe are supported upon a foundation of heavy masonry. This machine has two tool-rests. One of these has a movement parallel to the face-plate, the movement of the other being at right angles to the face-plate. Each of these rests has also another shorter movement.

A Lathe for Turning Driving-wheels.—In railway machine-shops and in shops which build locomotives a special lathe is used for turning locomotive driving-wheels. This lathe has two face-plates, two spindles, and two tool-rests. It is in reality two lathes on one bed, the object being to turn the two wheels of the locomotive driving-shaft simultaneously. These lathes are generally so designed that either of the face-plates may be operated independently. When so designed the lathes may be used for boring, the work being bolted to the face-plate.

The Gap-lathe. Increasing the Swing of a Lathe.—The gap-lathe is a lathe having a kind of gap made in the bed near the head-stock; in other respects it is similar to the common engine-lathe. The object of the gap is to admit of boring large pulleys, etc., in a small lathe. This expedient is adopted to a greater extent in England than in America.

A lathe has recently been designed in the United States with *auxiliary head and tail spindles*, the object being in the main similar to that of the gap-lathe. These auxiliary spindles are raised above the regular spindles.

The common method of increasing the swing of a lathe is to use *cast-iron blocks* under the head-stock and tail-stock and extend the tool-post.

The Tool-room Lathe.—This is a small engine-lathe made with special accuracy, and with draw-in collets and some other attachments not usually found on the ordinary lathe.

Cutting Speeds for the Engine-lathe.—There are so many considerations entering into the problem that it is difficult to give a specific rule for the speed at which a lathe should run for any given diameter of work. It should run faster for soft material than for hard, and generally faster for light cutting than for heavy cutting. One authority gives 20 feet per minute as an average cutting speed for cast iron and steel, but the tendency is toward much faster speeds. For roughing cuts on wrought iron and soft steel the speed may be from 20 to 45 feet per minute. Cast iron may usually be cut at somewhat higher speed. The speed for brass may be from 80 to 100 feet, and extra-soft brass may sometimes be cut at a speed of more than 100 feet per minute. When the tool becomes excessively hot and wears away too rapidly, it is an indication that the speed is too high. When it cuts freely and remains cool the speed may usually be increased. In cutting very hard material, such as chilled iron, for instance, it is sometimes necessary to run as slowly as 8 to 10 feet per minute.

The cutting speed is always taken on the circumference, and in feet

per minute. Thus, to turn a 3″ steel shaft at a cutting speed of 30 feet per minute would require $\frac{12\times30}{3\times3.1416}=38.22$ revolutions of the lathe-spindle per minute. The lathe seldom has the exact speed required, so that we take the nearest speed.

Self-hardening and High-speed Steels.—The preceding rules refer to tools made of carbon steel, but the self-hardening and high-speed steels mentioned in chapter VIII will stand much higher cutting speeds. In a series of tests made in Manchester, England, the results of which were published in the American Machinist, vol. 26, pages 1620 and 1658, it was demonstrated that self-hardening steel (Mushett) would stand double the speed of carbon steel with a given cut, and that high-speed steel would cut at more than double the speed of Mushett steel. The tests also showed very clearly the *economy of heavy cuts* at the sacrifice of surface velocity. Thus with a cut $^1/_{16}$″ deep and $^1/_{16}$″ feed per revolution of work soft steel was turned at 149 feet per minute, cutting 1.72 lbs. of shavings per minute; while with a cut $^3/_8$″ deep and $^1/_8$″ feed, the cutting speed being 54.5 feet per minute, the same steel was machined at the rate of 7.35 pounds of chips per minute. It should be noted that the *older* machines lack adequate power to get *maximum* results with high-speed steel.

Feeds. The Rotary Measure.—There is as much difficulty in giving a rule for the rate of feeding as for the cutting speed. The feed may vary between $^1/_{125}$″ per revolution and 1″ per revolution. About $^1/_{50}$″ per revolution would be right in most cases for roughing cuts on steel shafts of moderate diameters, and about $^1/_{32}$″ for cast iron. Machinists generally use very fine feeds for *finishing cuts* on small steel shafts—say $^1/_{125}$ to $^1/_{100}$ inch per revolution. Both the roughing and finishing cuts may be somewhat faster in heavier work. On large cast-iron work, where the fine finish is not required, it is sometimes practicable to take the smoothing cut at the rate of $^1/_2$ to 1 inch per revolution. When a large number of pieces of one kind are to be made, the most economical speed and feed for the work should be determined by the superintendent or an expert; otherwise the output may vary with different workmen from 25 to 100 per cent. Fig. 239 shows a rotary measure adapted to measuring the speed of lathe work. In measuring the speed of a shaft, for instance, the graduated wheel is brought into contact with the revolving shaft and, in connection with a stop-watch, the speed and feet per minute may be read directly from the dial of the instrument.

Miscellaneous. Meaning of the Word "Swing," etc.—The planed top of a lathe-bed upon which the lathe-carriage is guided is called the

ways or *shears*. Some manufacturers guide the lathe-carriage on flat shears, but the prevailing form is that of an inverted V, two of these V's being (generally) used to guide the carriage and two to guide the

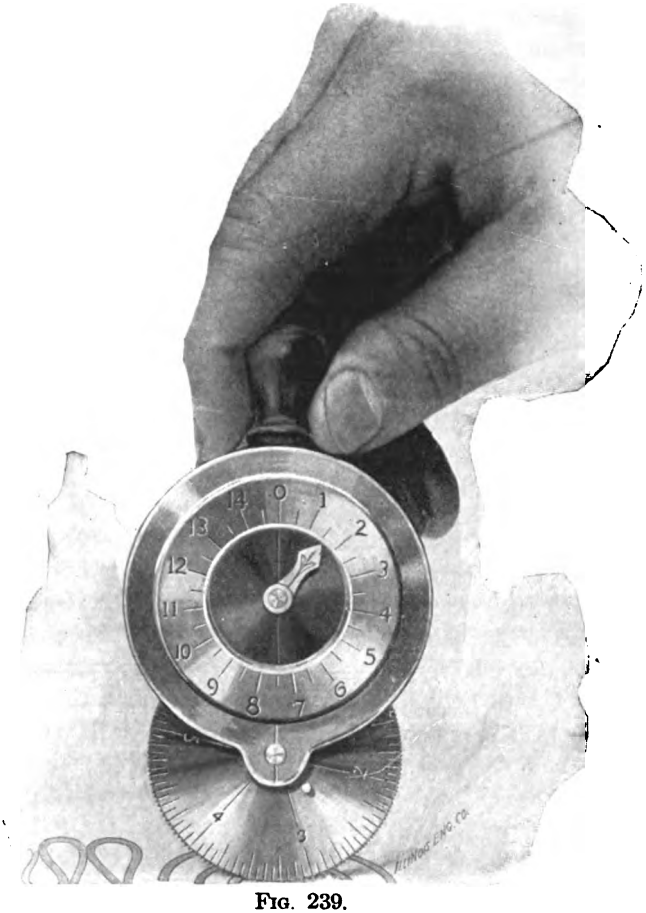

FIG. 239.

tail-stock. The V's are usually cast integral with the lathe-bed, but Fig. 240 shows a departure from the common design. This illustration shows the V's, which are made of drawn tool-steel, mortised into the lathe-bed. This method of making lathe-guides is worth investigating.

The author has observed some confusion among mechanics as to the meaning of the word "swing." The word "swing" means the diam-

eter of work which, held concentric with the spindle axis, will clear the ways. It is important to observe that a lathe will always swing less over the carriage or rest than over the ways. It should also be understood that the terms used in designating the length of the lathe do not indicate the capacity of the lathe between centers. For instance, a 16″×6′ lathe means that the lathe swings 16″ over the ways and

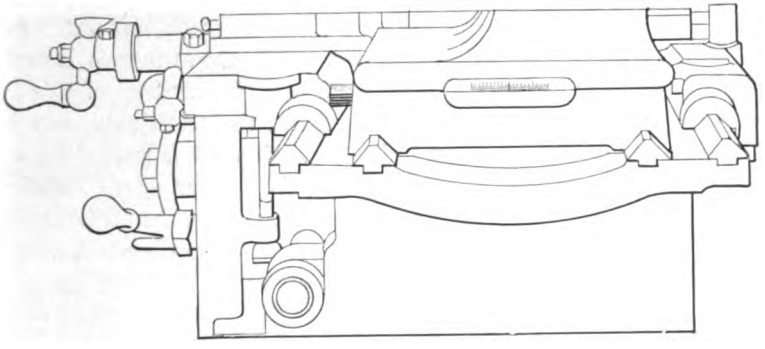

FIG. 240.

has a bed 6 feet long, but such a lathe will swing only about 10″ over the carriage, and take between centers a shaft only about 30″ in length. This lathe might be used to turn a pulley 16″ in diameter and 3 or 4 inches face, because the lathe-carriage would not need to pass under the pulley. But a pulley of the same diameter and having a 12″ face could not be turned in a 16″ lathe. It might be added that it is not considered economical to turn even a narrow-faced pulley in a lathe the nominal swing of which is not greater than the diameter of the pulley. The reason is that lathes are not ordinarily built stiff enough, or with sufficient power, to turn their full swing advantageously. However, the tendency is toward more powerful lathes.

Purchasing a Lathe.—One very important consideration in purchasing a new lathe is that the diameter of the spindle should be *amply large* for the work. In the Michigan Agricultural College there are several 14″×6′ lathes, of which the front spindle-bearings are $2^{7}/_{8}$″ diameter, the back bearings being proportionally large. These lathe-spindles are *hollow*—as all lathe-spindles should be—the hole being $1^{9}/_{16}$″ diameter. This large hole through the spindle is a very great advantage in turning short pieces on the end of a long bar. Having a large hollow spindle, such work can, in many cases, be passed through the spindle and driven in the lathe-chuck, the tail-stock being moved back out of the way.

The left end of a bar being operated upon in this way may be supported by any convenient means.

A lathe, to give the best results, should have a *bed of ample proportions* to resist flexure and torsion, and it should be supported on a foundation of masonry. Beds of box form, with openings at intervals to allow the chips to drop through, are very strong to resist the stresses mentioned. The metal around the openings in the webs should be reinforced by vertical ribs to compensate for the metal cut out. Some years ago the class in machine design of which the author is instructor designed a lathe having a bed of this form. The carriage of this lathe is guided by *one* V of ample proportions on the front side, and by a flat way on the rear side of the bed. The tail-stock is guided by a flat way on the front side, and by a V guide on the rear side. This is believed to be a good design, but it is not original with the author. With respect to the stiffness of the lathe-bed, it may be observed that the average bed may be sprung perceptibly by merely prying up at one corner by a lever under the legs. This may be easily proved in connection with a Bath indicator. To make the test, the indicator should be held in the tool-post with its finger in connection with the lathe face-plate. In purchasing a high-priced lathe a guarantee as to the limit of error in boring and facing should be required of the manufacturers. It should be observed, however, that *the most accurate lathe may be twisted out of shape by unskillful adjustment on the foundation.* Any lathe having a compound rest should also have an *offset tail-stock* somewhat similar to that shown in Fig. 214. The object of offsetting the tail-stock is to allow the compound rest a maximum arc of movement.

The counter-shaft of a lathe should also receive some consideration. The pulleys and hangers should preferably be self-oiling, and the cheaper forms of trappy clutch-pulleys should be avoided. Tight and loose pulleys with shifting belts give better satisfaction than a *poor* clutch-pulley; but a good, simple, durable clutch-pulley is more convenient and is better for the belts.

Testing the Lathe-spindle.—After a lathe has been used a few years it may be found that the spindle is slightly out of line, so that it will not bore a parallel hole. Fig. 241 illustrates a method of testing the spindle. *a* and *b* are two trams bolted to the face-plate of the lathe, *a* being made of metal, and *B*, for the sake of lightness, being made of wood. The center in the main spindle should be removed and tram *a* should be so made as to project about $^1/_2''$ beyond the face-plate. *b* should

project not less than 24″. To test the spindle move the tail-stock until its center comes within reach of the first tram, and, with tail-stock and tail-spindle tightly clamped, turn the face-plate and note whether the tram revolves concentrically with the center in the tail spindle. If not in line horizontally, adjust the tail-stock by the set-over screws until the tram clears equally at two points horizontally opposite around the

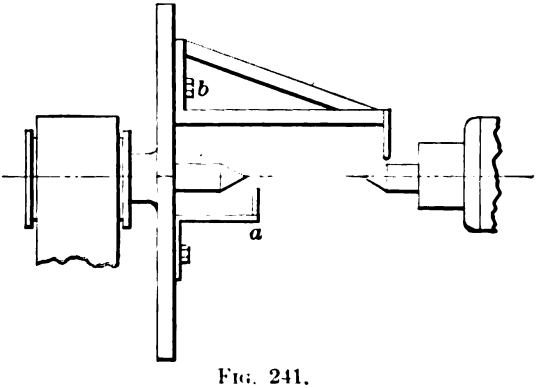

FIG. 241.

center. Move the tail-stock back and clamp as before, testing by long tram. If the spindle be in line horizontally, the tram will clear the center equally at each side. If not in line, it may be possible to make the correction by placing strips of paper between the V grooves of the head-stock and the V's of the lathe. The trams will usually indicate that the main spindle is also too low and the shims will raise it. If the spindle-boxes are square or some shape other than round, it may be preferable to adjust the spindle vertically by shimming under the boxes. If the boxes be cylindrical, truing up the spindle and making new boxes will bring the spindle to its original alinement without the use of the shims.

The cylindrical part of a lathe-center is sometimes eccentric to the conical point. In such a case the trams must be applied to the conical part of the center. The tail-stock spindle may be tested in its two extreme positions in connection with the long tram.

CHAPTER XII

TURRET-MACHINES AND TURRET-MACHINE WORK

Distinguishing Features of the Turret-machine.—The slow processes of the engine-lathe, while still necessary in some kinds of work, have proved inadequate to meet the demands in many lines of manufacturing. In special work, including short cylindrical pieces of which a great many are to be made from one drawing, the turret-machine is far more economical. The essential principle of a turret-machine is a tool-holder, which may be revolved upon its axis to bring any one of a number of tools (usually six) into operation. Having only one tool-post, the engine-lathe necessitates much loss of time when various operations are to be performed on the same detail. In the turret-lathe the tools for any given piece of work, having been once adjusted, may be successively and quickly brought into action until a large number of pieces are finished.

The turret-lathe was originally limited in its adaptation, but it has been modified and improved to such an extent that now the best class of these machines will cover nearly as wide a range of work as the engine-lathe. In machining wrought iron, steel, etc., on the turret-machine the work is supplied with a stream of oil, a tank and pump being used for this purpose. The cutting speed is, therefore, higher than would be used for the same work in the engine-lathe.

Description of a Plain Screw-machine.—Fig. 242 shows a B. & S. *screw*-machine in which the turret principle is employed. This machine is designed to make screws, studs, and various small pieces from a bar. The spindle is hollow and the bar is passed through the spindle and gripped by a chuck. T is the turret, having seven holes for different kinds of tools, and R is the cross-slide in which either one or two tools may be used. The turret may be moved longitudinally by hand by the turnstile lever L, and automatically by the feed-cones P and feed-rod and gearing on the rear side of the machine. In this particular machine there are eight changes of the automatic feed, varying from .005 to .030 inch to one revolution of spindle. The feed-cones have only four steps,

but for each step there are two speeds, the change being made from fast to slow by a lever which operates mechanism on the rear side of the machine. The longitudinal movements of the turret are controlled by

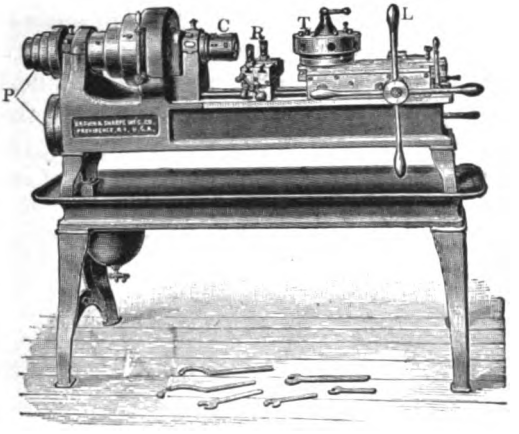

FIG. 242.

independent stops, which are adjusted for the various operations on each piece of work.

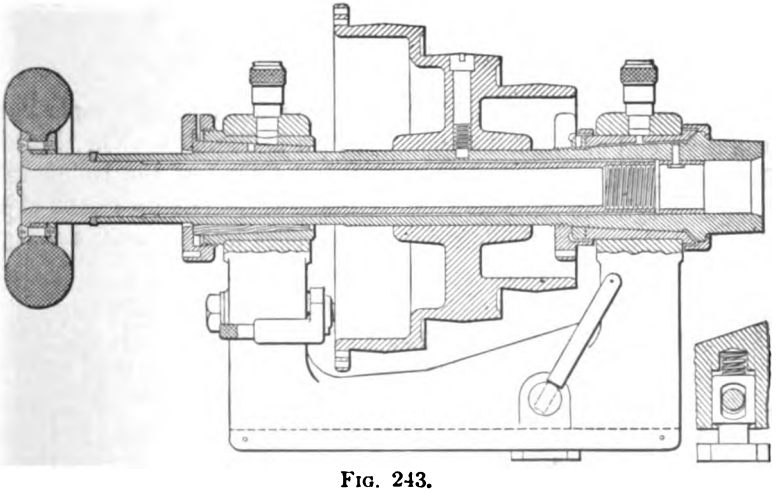

FIG. 243.

As indicated, the principal factor in the economical operations of turret-machines lies in the turret, which holds in correct adjustment a

number of tools which may be quickly brought into operation. Another important factor, however, is that the work, being held in a universal chuck, or a spring-chuck, and turned from a bar, requires no preliminary cutting off and centering.

The chucks used in many turret-machines are quite different from those commonly used in the engine-lathe. There are various modifications of these chucks, but the general *principle* of chucking is clearly shown in Figs. 243 and 244. These figures show respectively the headstock of a Pratt & Whitney bench-lathe and a chucking-collet belonging to the latter. The collet is split as shown to admit of its being closed

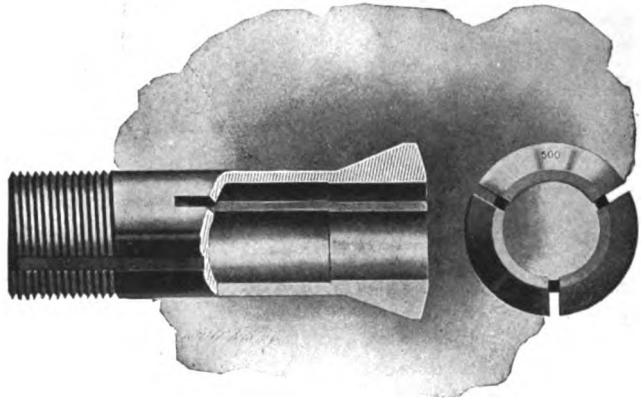

FIG. 244.

upon the stock. The conical shoulder of the collet fits the conical seat in the right end of the lathe-spindle shown in Fig. 243. The threaded end of the collet engages with the internal thread of the hollow shaft passing through the lathe-spindle. Turning this shaft by means of the hand-wheel shown on the left draws the collet into its seat, causing it to grip the stock.

Fig. 245 shows samples of work done on a screw-machine.

Making Filister-head Screws in a Screw-machine.—If required to make a large number of, say, $^1/_2''$ filister-head screws, a bar of machine-steel of suitable diameter would be passed through the spindle and gripped by the chuck. In passing the bar through the chuck the distance that it projects is regulated by an adjustable stop held in one of the turret-holes. When adjusted to any given length of work, this stop regulates the projection of each succeeding piece to be made, the stop being moved out of the way by the motion of the turret after each chucking.

The adjustment of the stock may be considered the first operation.

The stop being properly set, the turnstile lever is operated to bring the turret-slide to the right, and in this movement certain mechanism is

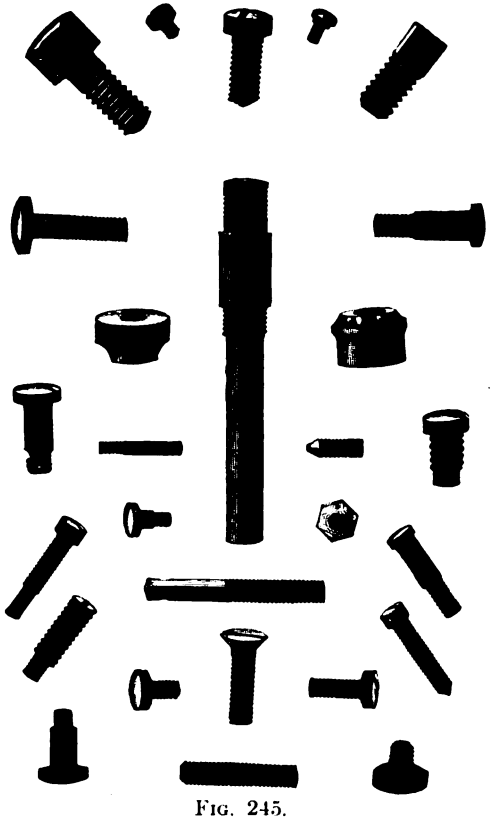

FIG. 245.

brought into operation which rotates the turret $^1/_7$ of a revolution, bringing the second tool into alinement.

Probably the next operation would be to bevel the end of the bar by a tool held in one of the tool-posts. This is very rapidly done by a quick-acting handle or lever connected with the cross-slide.

The third operation is to feed the turret, bearing a roughing-tool to the revolving bar. The travel of this tool is controlled by a stop previously adjusted for the purpose.

Having taken a roughing cut, the turret-slide is quickly moved back and rotated as before to bring in line the next tool, which is a sizer.

The sizer is then fed up to the stock, cutting the body of the screw to the right diameter for the thread.

For the fifth operation the turret-slide is moved back and rotated, bringing a threading-die in line, the forward traverse of the turret-slide for this operation being also controlled by a stop. Sometimes two dies are used, one for roughing and the next for sizing the thread.

The sixth operation is to chamfer the end of the screw. This is often effected by the tool in the front tool-post.

It remains in the seventh operation to cut the screw off to length. This may be accomplished by an inverted tool in the rear tool-post. Sometimes this tool is so shaped as to *round the end* of the screw at the same time that it is being cut off.

It must not be inferred that the above method is the only method of making filister-head screws on the turret-machine. Different workmen perform the same work in different ways. In some kinds of work, especially work of irregularly curved outline, forming-tools are largely used. Samples of such work and the methods connected therewith are shown elsewhere in this chapter.

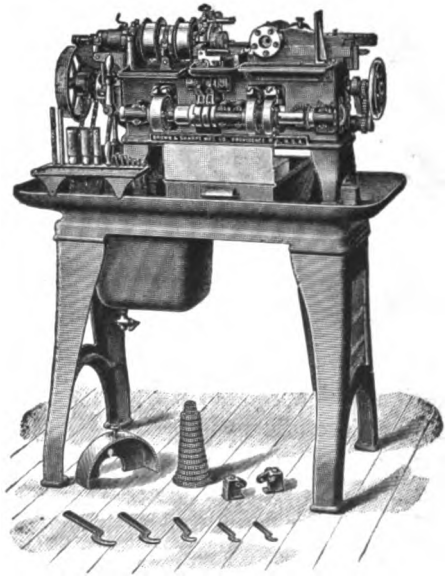

FIG. 246.

Automatic Screw-machine.—Fig. 246 shows an automatic screw-machine. In this machine the turret is placed on the side of the turret-

slide and its face revolves in a vertical plane. The operations of the chuck, the feeding of the bar stock, the reversing of the spindle, the movements of the turret-slide, are all controlled by quick-acting cams.

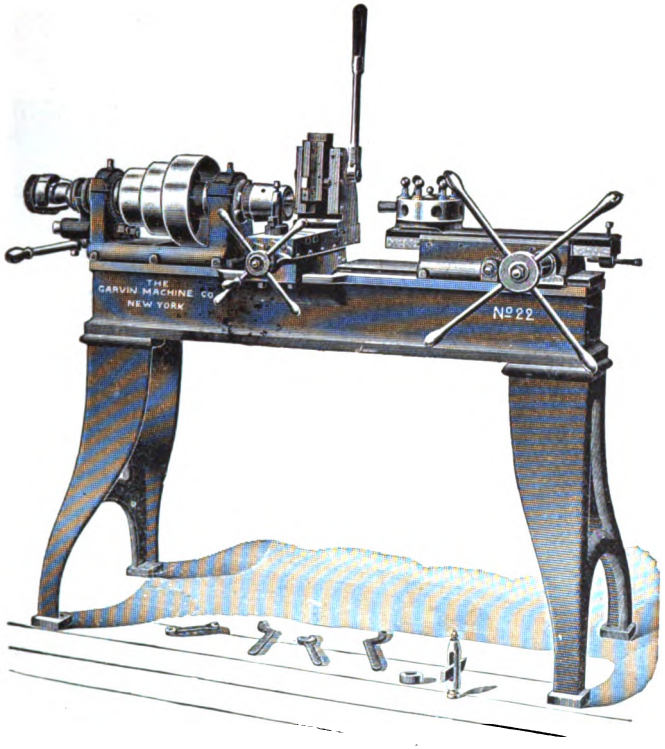

FIG. 247.

The manufacturers of the machine furnish with each machine instructions for laying out the cams. Full instructions for camming this machine are also given in the September 1903 issue of "Machinery," page 6.

Monitor Lathe.—The monitor lathe shown in Fig. 247 is adapted to small gears, collars, hand-wheels, brasswork, etc. In addition to the turret it has a vertical *forming* attachment which is seen mounted on the cross-slide. Tools of various shapes may be secured to the slide and fed to the work by the vertical lever shown.

Gisholt Turret Chucking-lathe.—As indicated in the beginning of this chapter, turret-machines have been modified and improved to such an extent that the best modern types cover almost as wide a range

of work as the engine-lathe. Figs. 248 and 249 show a machine which, while designed primarily for *multiple and broad cutting* and heavy chuck-

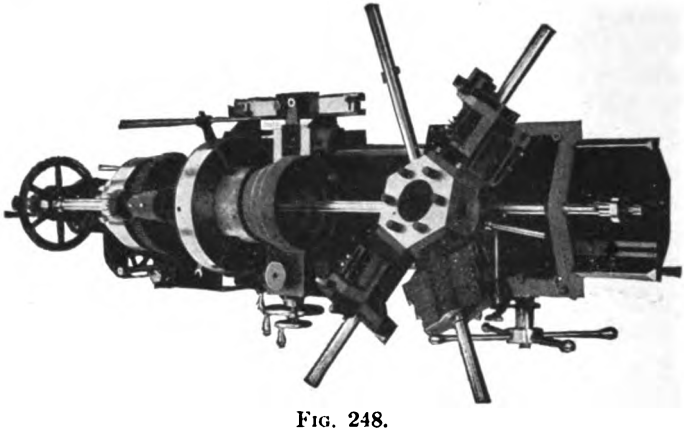

FIG. 248.

ing-work, will also handle a medium grade of work, including bar stock and thread-cutting. The first of these figures shows a machine

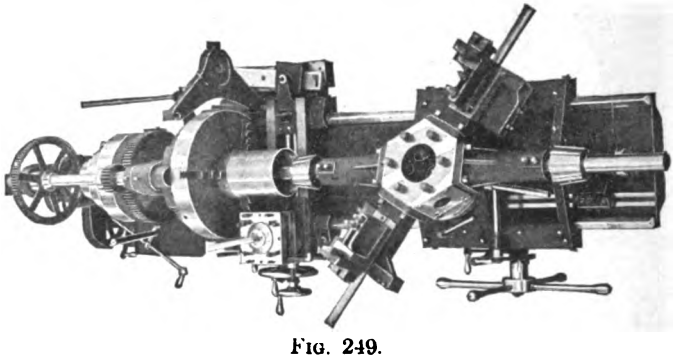

FIG. 249.

in operation upon a cone pulley, and the piece of work shown in connection with the second illustration resembles a compression coupling.

To better adapt this machine to the heavy stresses to which it is subjected, the head-stock, bed, and other important members of the framework are made in *one casting*.

The turret, which slides directly on the ways of the bed, is made massive and rigid. In common with other turrets it is provided with holes for the reception of reamers, bars, etc., and in addition thereto

it has *six broad surfaces to which may be bolted a great variety of special tools* and fixtures. This machine is provided with a carriage bearing a *turret tool-post* in which four tools may be used. Any one of these tools may be instantly brought into action.

The machine is so designed that the tools of the main turret and those of the carriage may be in operation at the same time. Thus, in machining a pulley, for instance, the periphery of the pulley could be turned by tools in the carriage tool-post at the same time that the pulley was being bored by the tools in the main turret. When boring with a boring-bar in the turret, *one end of the bar is supported by a bushing in the main spindle* of the machine. This arrangement gives extra rigidity to the boring-bar.

The Hollow Hexagon Turret-lathe. — Fig. 250 shows a machine known as the hollow hexagon turret-lathe. As indicated by its title

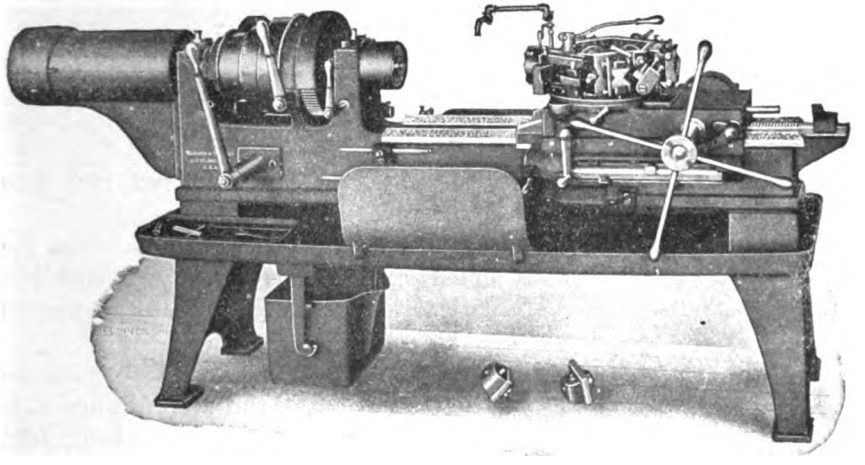

FIG. 250.

the turret in this machine is hexagonal, the tools being clamped to the outer faces of the turret. The open top admits of the tools and fixtures being bolted from the inside of the turret, without taking up any room on the outside for the bolt-heads, etc. This machine is provided with roller feed, independent stops, automatic chucks, etc.

Fig. 251 shows the spindle projecting through the front bearing. The head for holding the chuck-collets is forged on the end of the spindle, giving a minimum of overhang to the gripping mechanism. The

arrangement is such that the collets may be conveniently removed from the outer end of the spindle without disturbing the chuck. This machine has a capacity of turning from bar stock work not greater

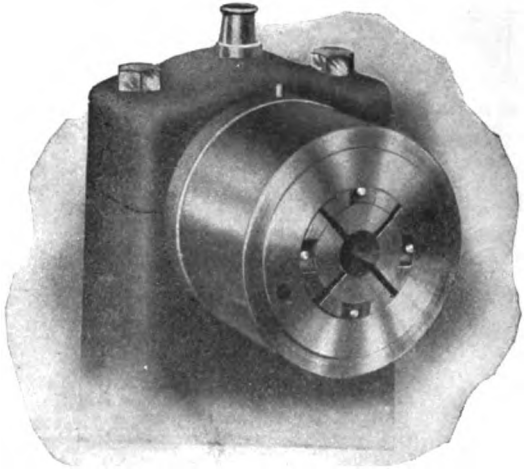

FIG. 251.

than 2″ diameter by 24″ long. It swings over the bed 16″, thus admitting of the machining larger work of short length.

The Flat Turret-lathe.—Fig. 252 shows the machine known as the flat turret-lathe. This machine is of the same capacity as that last described. The names of the leading parts are given in connection with the illustration.

The turret which is shown in Fig. 253 bears but little resemblance to that of common form, and it is called a *flat* turret to distinguish it from the latter. The turret is mounted on a low carriage, being held to the carriage by an annular gib. The carriage slides on V's on top of the bed and is gibbed to the outer edges of same. The tool-holders have little or no overhang, and the whole design of the turret is such as to afford great rigidity. The automatic traverse of the carriage is operated by a worm-wheel and worm. The worm, which is held in mesh with the worm-wheel by a latch, is automatically disengaged by the feed-stops. The stops are shown projecting beyond the right end of the machine. There is one of these stops for each tool-holder of the turret, and they are independently adjustable. By automatic mechanism the turret is rotated to bring the next required tool into operation as soon as it clears the work in its backward traverse. The

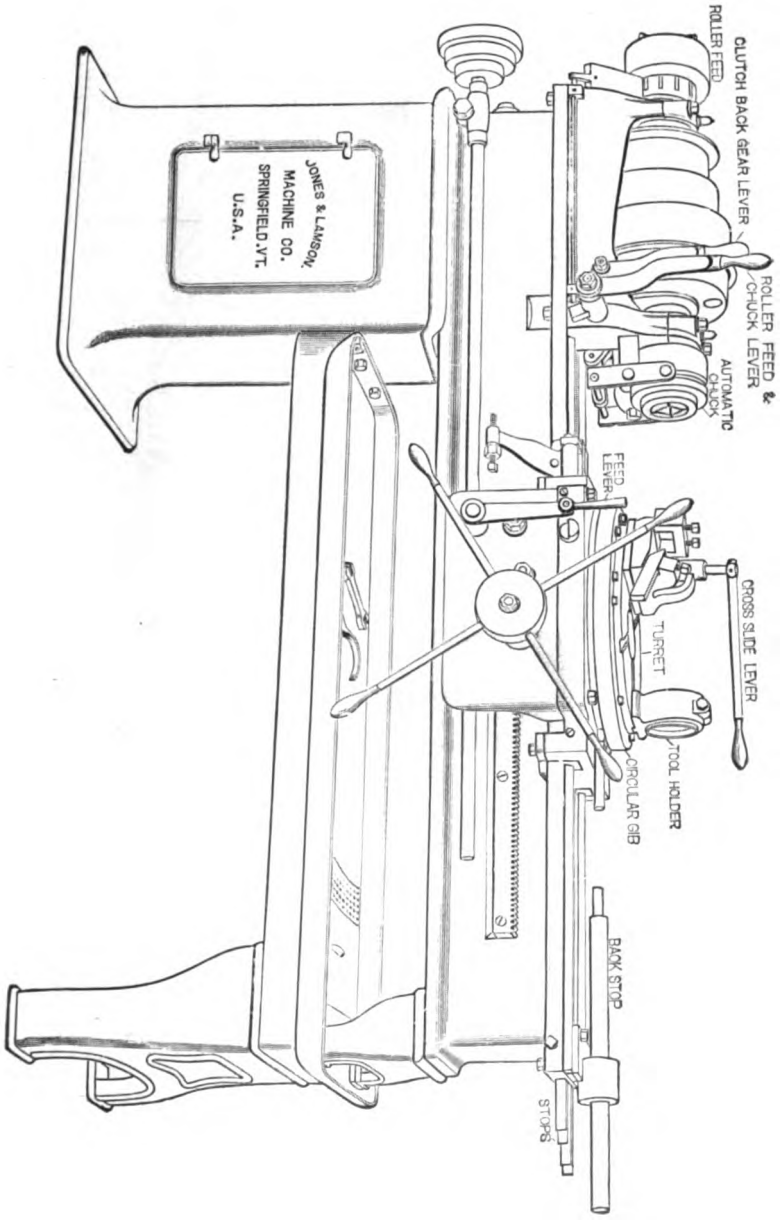
CLUTCH BACK GEAR LEVER
ROLLER FEED
ROLLER FEED & CHUCK LEVER
AUTOMATIC CHUCK
FEED LEVER
CROSS SLIDE LEVER
TURRET
TOOL HOLDER
CIRCULAR GIB
BACK STOP
STOPS
JONES & LAMSON MACHINE CO. SPRINGFIELD, VT. U.S.A.

Fig. 252.

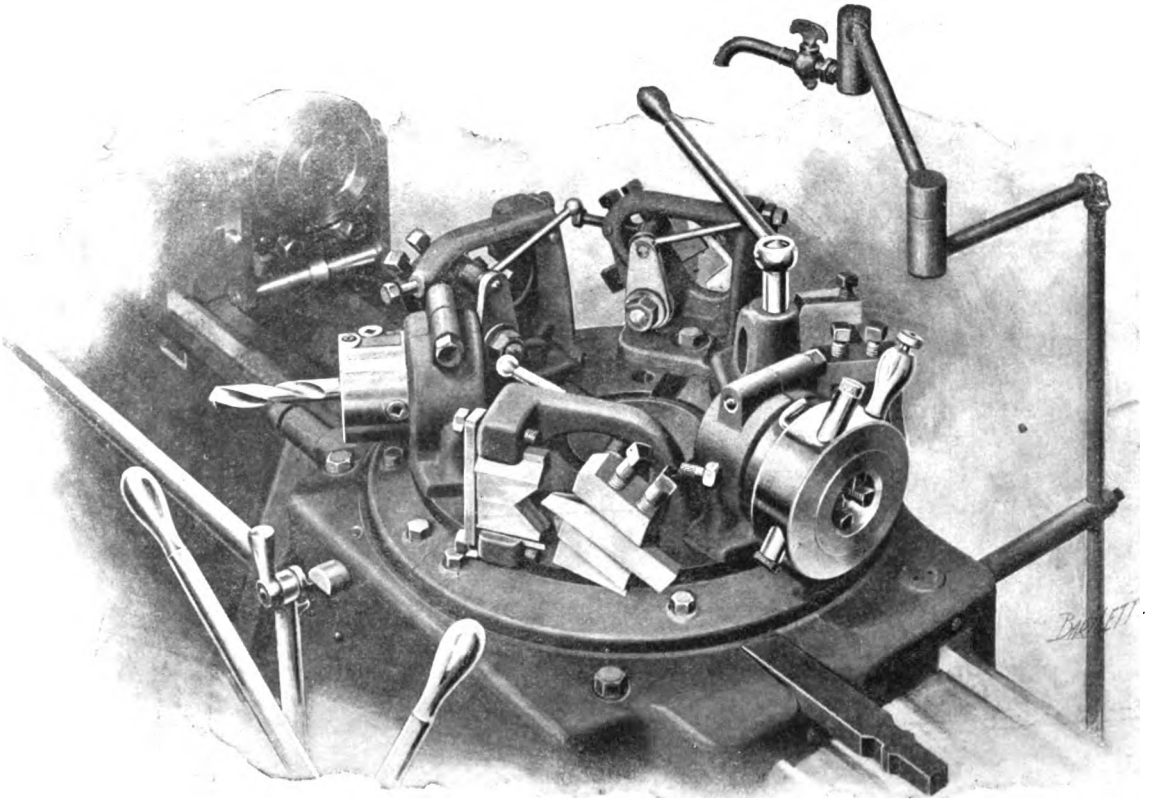

Fig. 253.

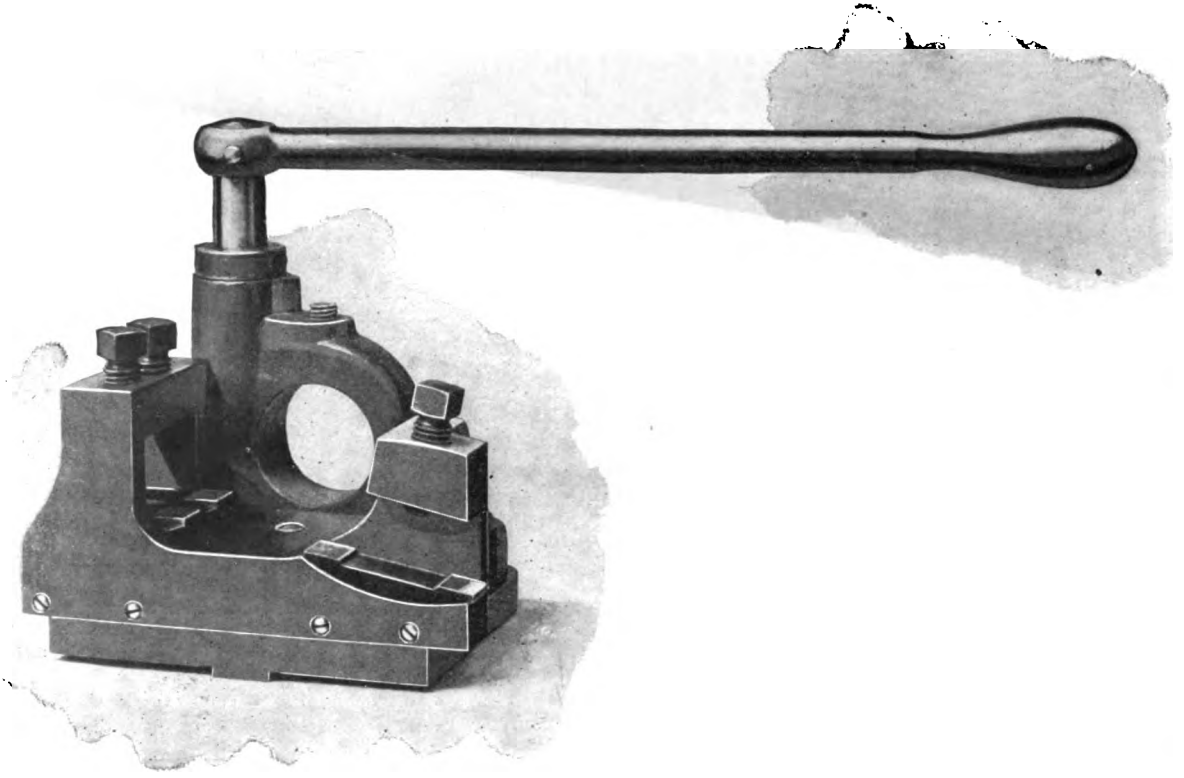

FIG. 254.

pin which locks the turret in position is placed at a maximum distance from the center of the turret, the arrangement being such as to reduce the lost motion to practically zero.

The Cross-slide.—Fig. 254 shows a cross-slide used in connection with the turret. In addition to the cutting-off tool commonly used in one side of the cross-slide, various forming-tools and other special tools may be held on the opposite side. The tools are brought in contact with the work by the long lever shown.

The apparatus furnished with the flat turret-machine admits of a wide range of operations, but it is sometimes advantageous to make special fixtures for special work. Several of these machines are in operation in a plant within a minute's walk of the office where this book was written, and the officials of the Omega Separator Company kindly permitted the author to observe the operations of these and other turret-machines. He noticed a special cross-slide which was made at the plant and used in connection with separator bowls. This slide has two tool-holders. The first tool-holder carries a formed cutter and a cutting-off tool which rough-turns the piece and cuts off a projecting end. When this roughing is completed the cross-slide is fed in the opposite direction, bringing the finishing-tool in contact with the work.

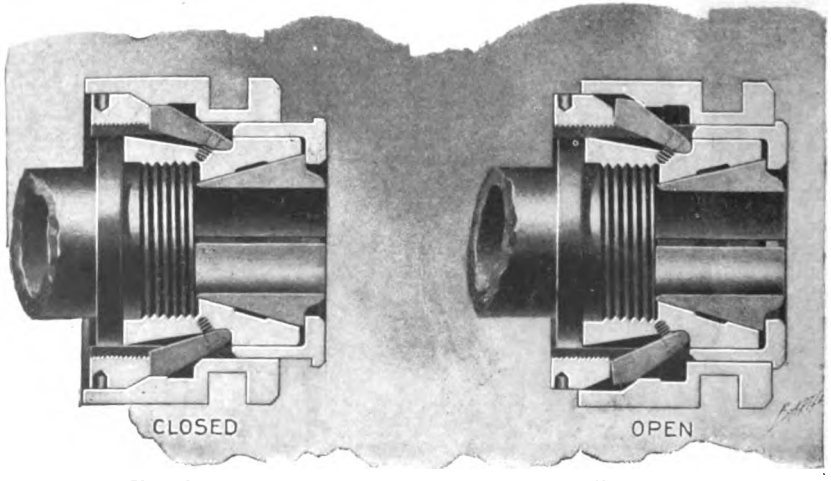

FIG. 255. FIG. 256.

Automatic Chuck and Roller Feed.—Sectional views of the automatic chuck are shown in Figs. 255 and 256. This chuck grips round, hexagon, and other shapes usually handled in a turret-machine. The

first of these figures shows the chuck closed, and the second shows it open. Fig. 257 shows the roller-feed mechanism. When the chuck is open the feed mechanism advances the stock through the spindle

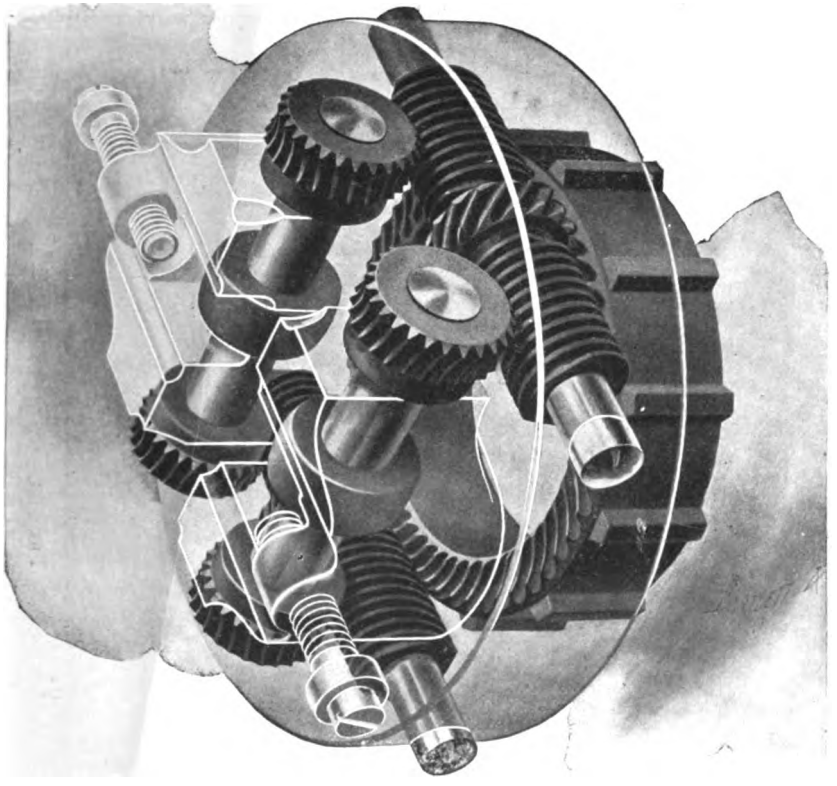

FIG. 257.

and chuck until it comes in contact with a stop attached to the front of the carriage. It is set in motion by the same lever that controls the chuck. The rollers are held in contact with the stock by stiff springs which admit of slippage when the bar meets the stop.

The Die-carriage.—In addition to the provision for holding threading-dies on the turret, the machine is furnished with a *die-carriage* in which thread-dies of any kind may be held. This carriage is mounted on a sliding bar, as shown at *D* in Fig. 258, and may be swung into working position by means of the lever at its top.

Improvements in the Flat Turret-lathe.—This machine has been recently redesigned, a side view of the new machine being shown in

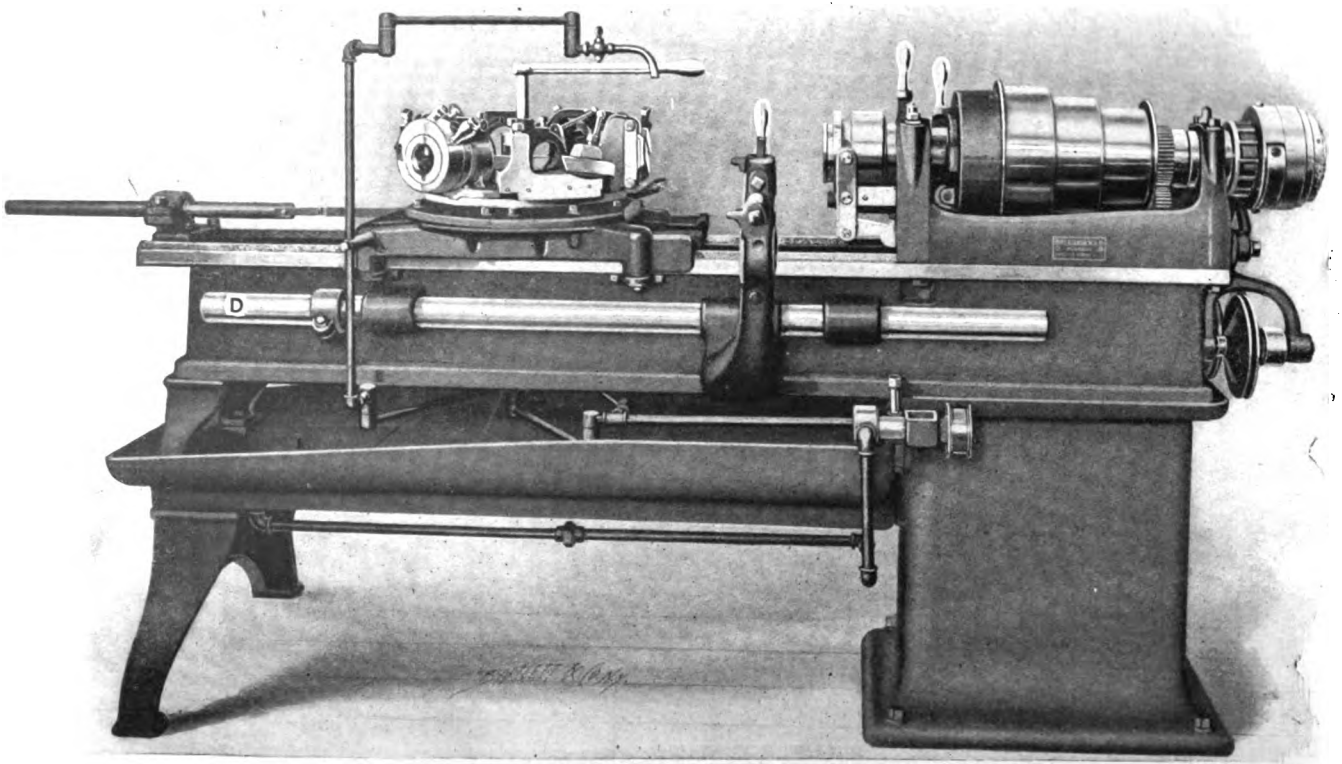

Fig. 258.

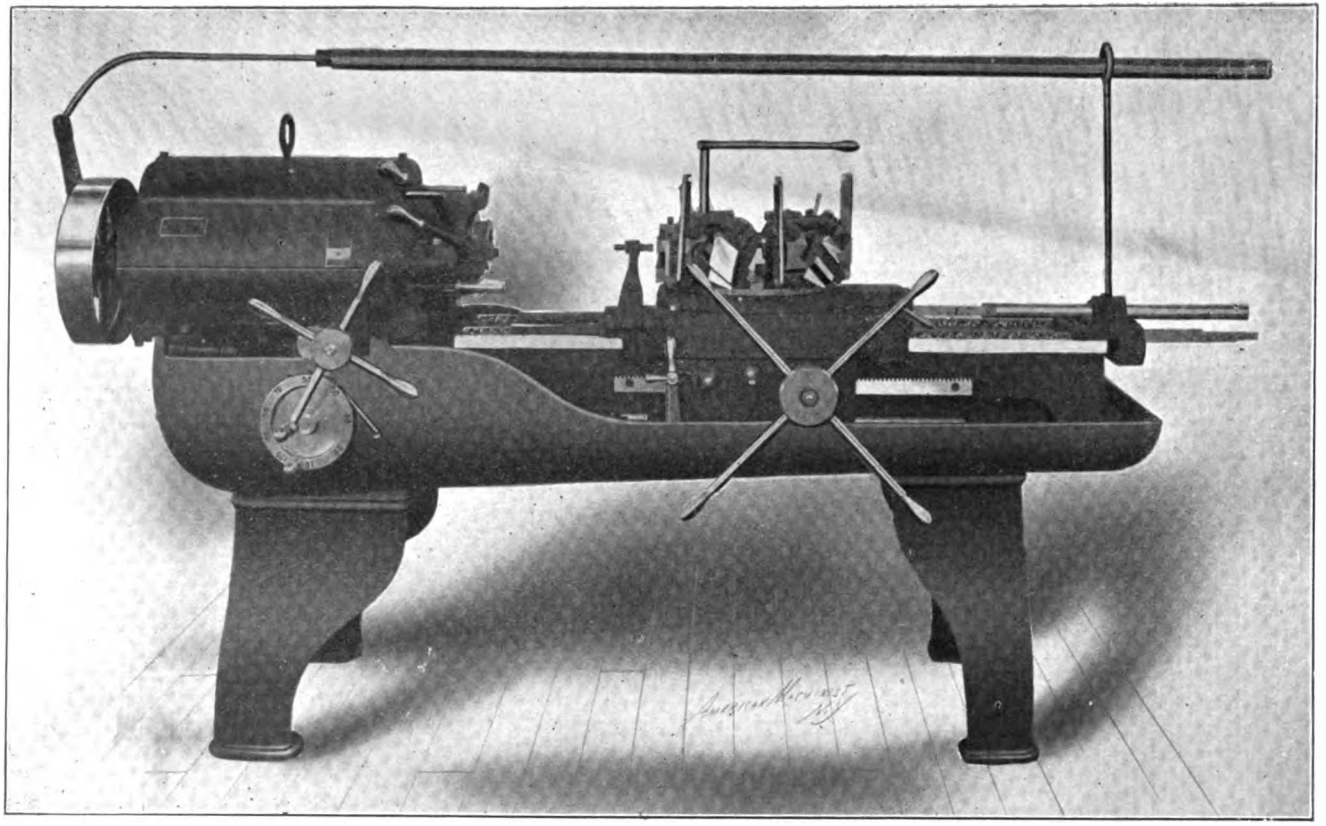

FIG. 259.

Fig. 259. The latest construction admits of such a close approximation to the processes of the engine-lathe that in many kinds of work the tools of the engine-lathe may be used. This makes it possible in many

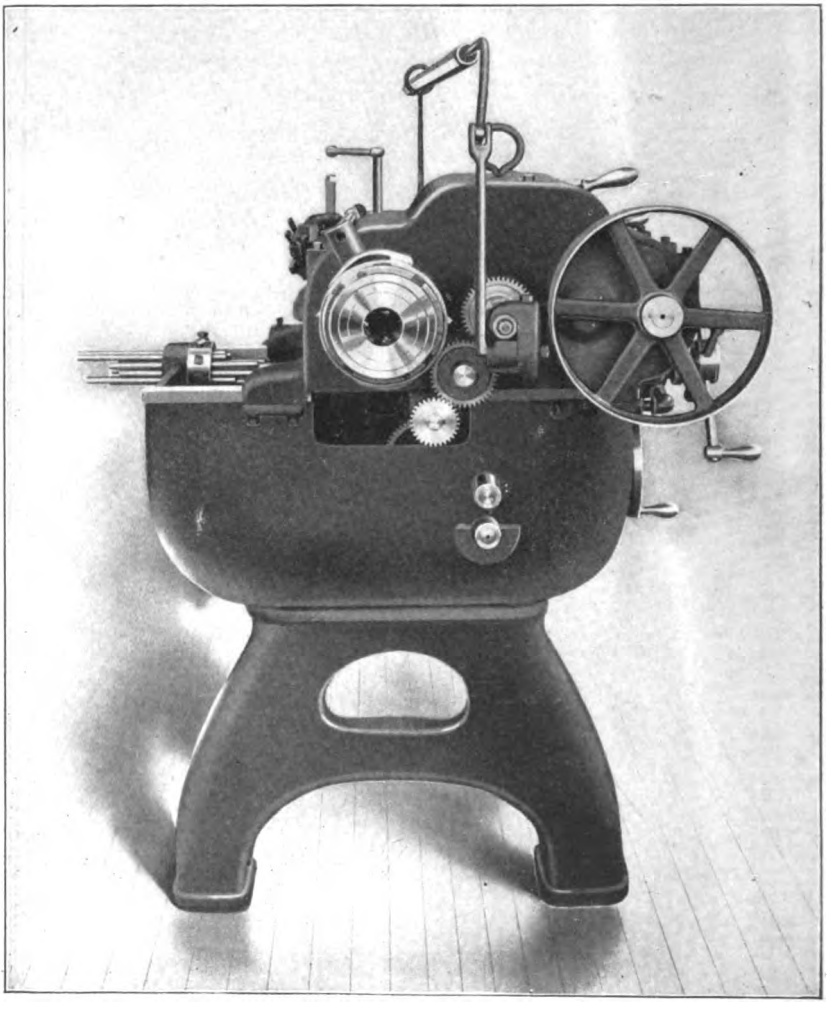

Fig. 260.

cases to machine *single* pieces as cheaply as, or more cheaply than, in an engine-lathe. The alterations in the machine are such as to adapt the machine also to common chuck work. The head-stock, which was fixed

rigidly to the bed, has been given a crosswise movement, and in connection with this movement a series of stops similar in principle to those

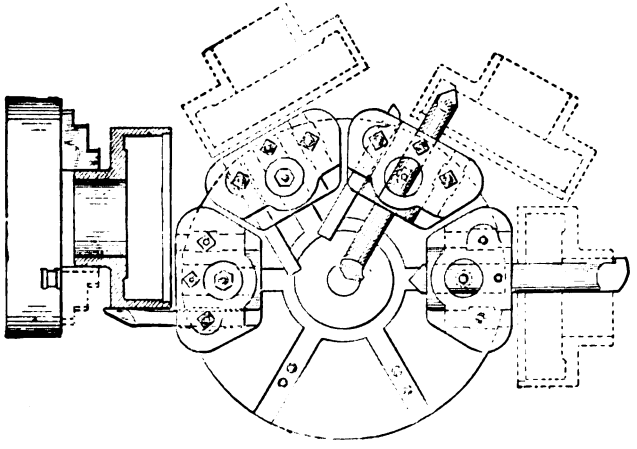

FIG. 261.

used in the turret are used. The stops are seen projecting from the left side of the machine in Fig. 260. The crosswise movement of the

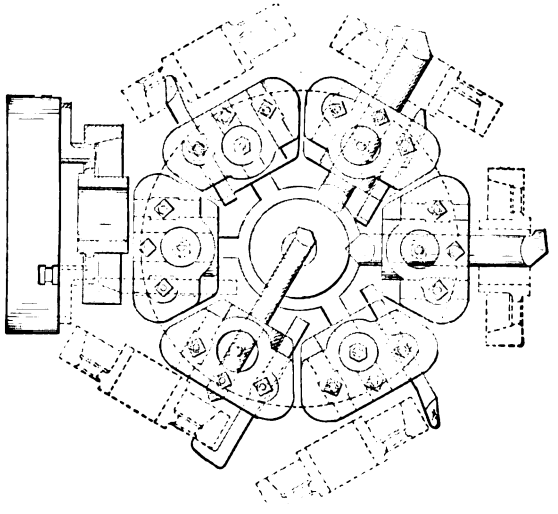

FIG. 262.

head-stock is effected by the turnstile lever shown in Fig. 259. This movement is wholly on one side of the center line, the head-stock being

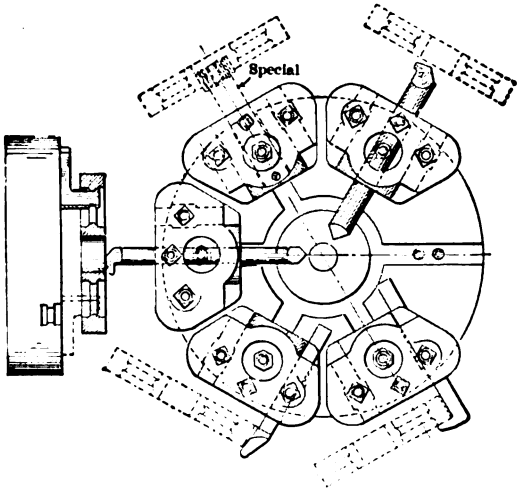

FIG. 263.

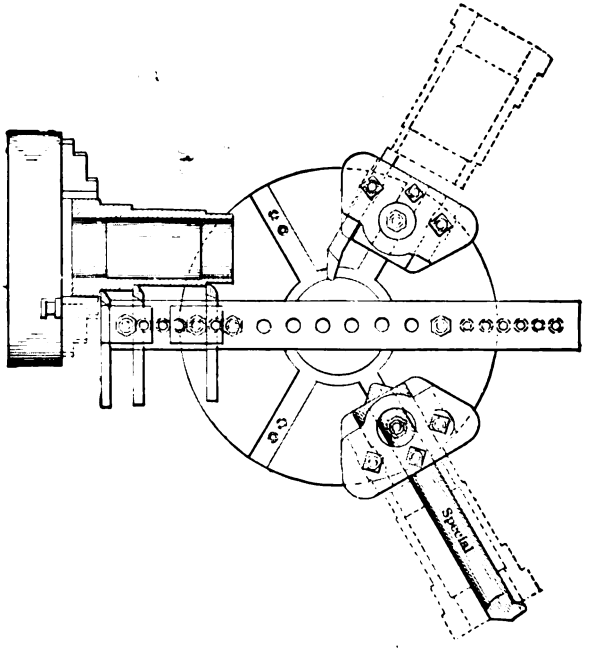

FIG. 264.

returned to a fixed stop when reamers and other tools of this character are used. Both head-stock and turret-slide are provided with power

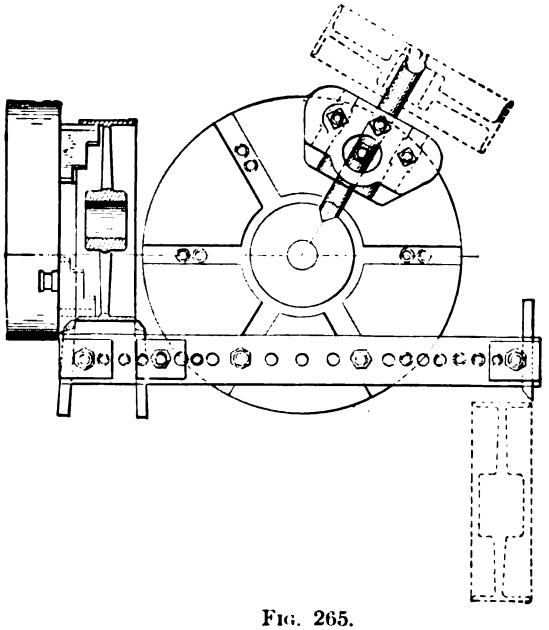

FIG. 265.

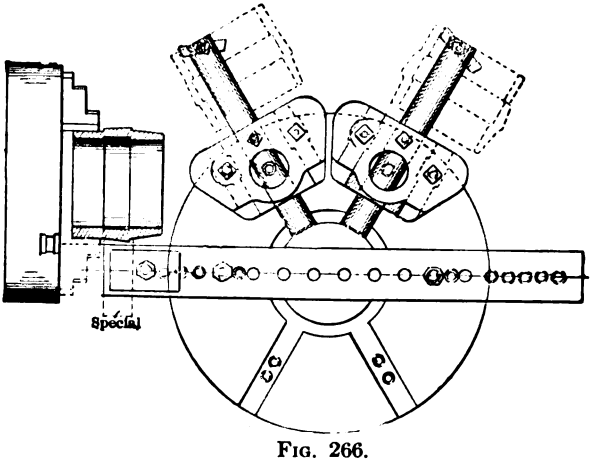

FIG. 266.

feed. Friction mechanism is used to operate the power feed, the rate of feed being adjusted by a graduated hand-wheel shown under the

head-stock turnstile lever. The combination of the longitudinal movement of the turret and the crosswise movement of the head-stock, in connection with the stops for both, admits of machining with the same tool two surfaces which meet in a corner.

The Geared Head.—Instead of the cone-pulley drive for the main spindle a system of gears giving the various spindle speeds is employed, the changes being made by levers. This gearing is operated by a single-face pulley, as shown in Fig. 259. The machine may be driven with equal facility either by a counter-shaft or an electric motor.

Examples of Work Done on the Improved Machine.—Figs. 261, 262, 263, 264, 265, and 266 show various operations indicating the adaptability of the new machine to chuck work, the long cross-bar shown in the last three figures being particularly noticeable. Fig. 264 shows three cuts being taken simultaneously with the cross-bar, and Fig. 265 shows the cross-bar facing both edges of a pulley in one operation.

Turrets as Used on Engine-lathes.—The turret-machine has proved so advantageous that many engine-lathes are now furnished with turrets.

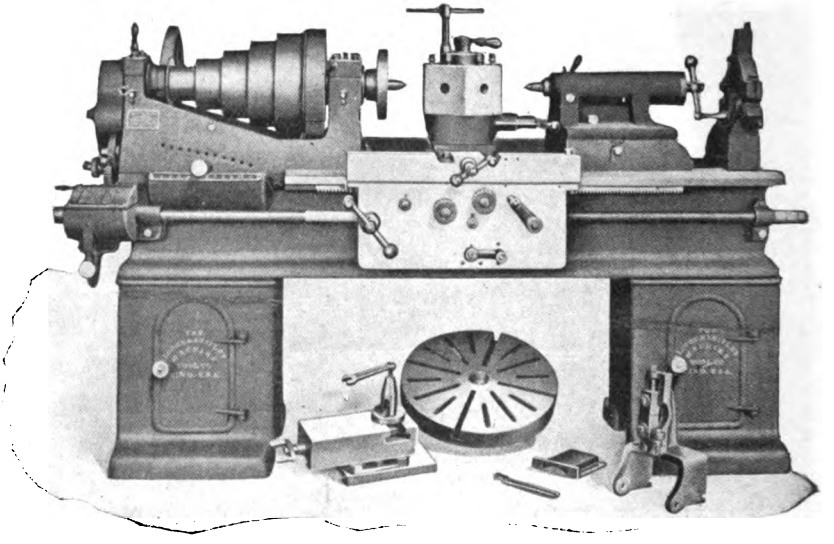

FIG. 267.

Fig. 267 shows a turret engine-lathe. The turret of this machine has crosswise and longitudinal feeds, these being effected automatically by the regular carriage-feed mechanism.

Fig. 268 shows a turret adapted for use on the ways of an engine-lathe.

The turret shown in Fig. 269 is designed to be held on top of the tool-rest of a lathe the same as a tool-post is held. The turrets illustrated in

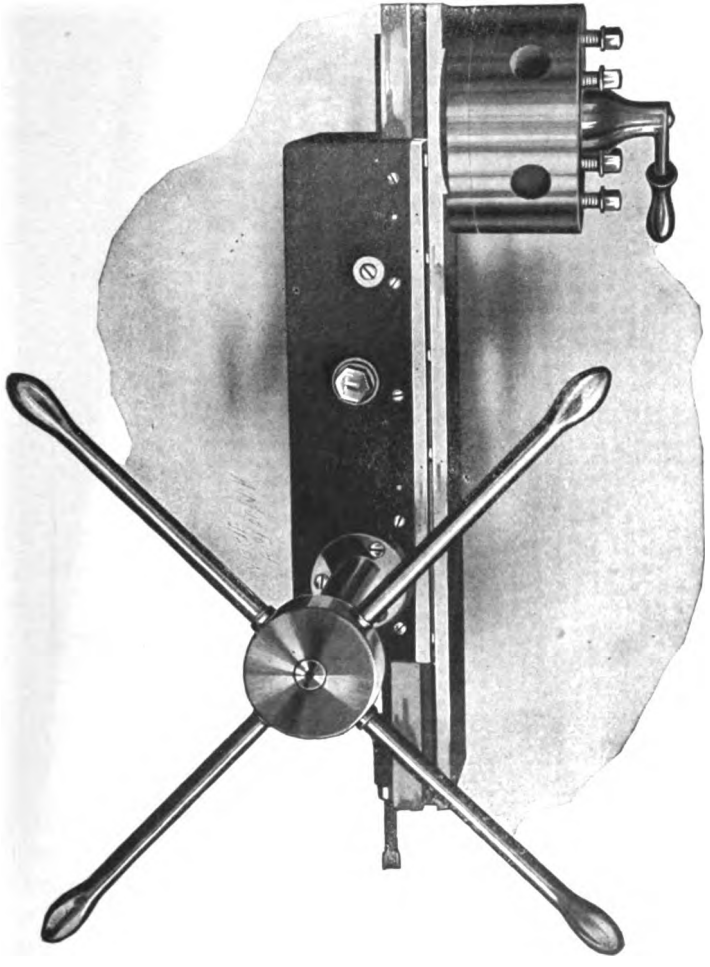

Fig. 268.

Figs. 267, 268, and 269 may be detached, when the lathe may be used as an ordinary engine-lathe.

TOOLS USED IN THE TURRET-MACHINE

Box Tools.—One characteristic of the turret-machine is its use of *box tools*. Fig. 270 shows a simple design of box tool which was

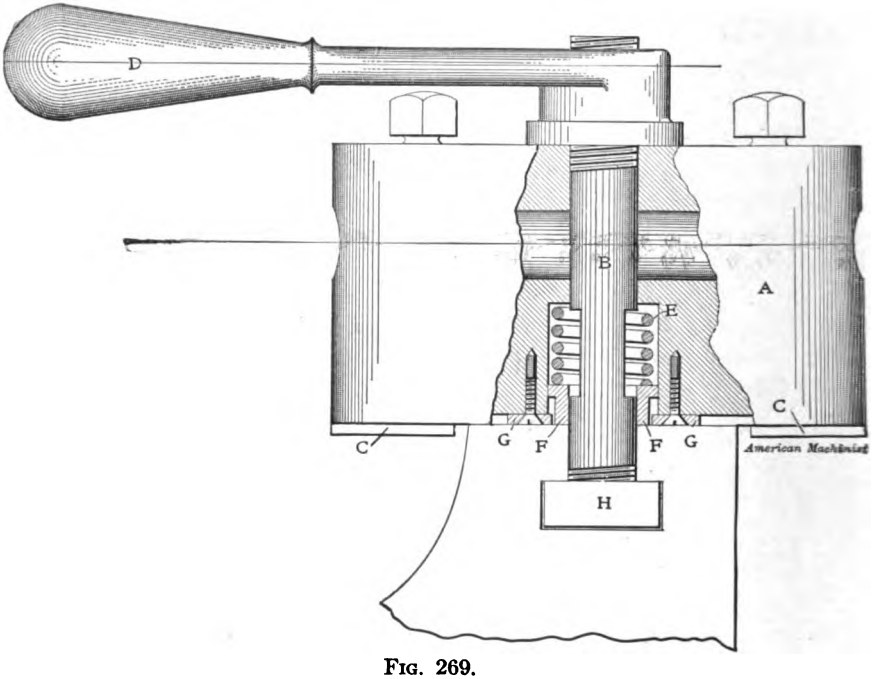

FIG. 269.

suggested by C. H. Ramsey in "American Machinist," vol. 27, page 61. The tool *B* fits in a slot in the end of the tool-holder and is clamped as shown. The back rest *F*, which supports the pressure of the cut, also fits in a slot, and both cutter and back rest are adjustable. This holder is made from round stock, and the small end fits in one of the turret-holes. With slightly more expense the back rest could be placed at an angle as shown in Fig. 271, and this arrangement furnishes a better support to the cutting-tool. In using box tools on rough stock the cutting-tool is usually placed slightly *in advance of the back rest*. The cutter *B* in Fig. 270 is so placed. This arrangement provides for cutting a true bearing for the rest. On smooth stock, such as round cold-rolled bars, the rest is usually placed in *advance of the tool*.

A box tool having two cutters is shown in Fig. 272. These cutters

may be adjusted for two different diameters, the forward tool making the larger diameter and the rear tool the smaller diameter.

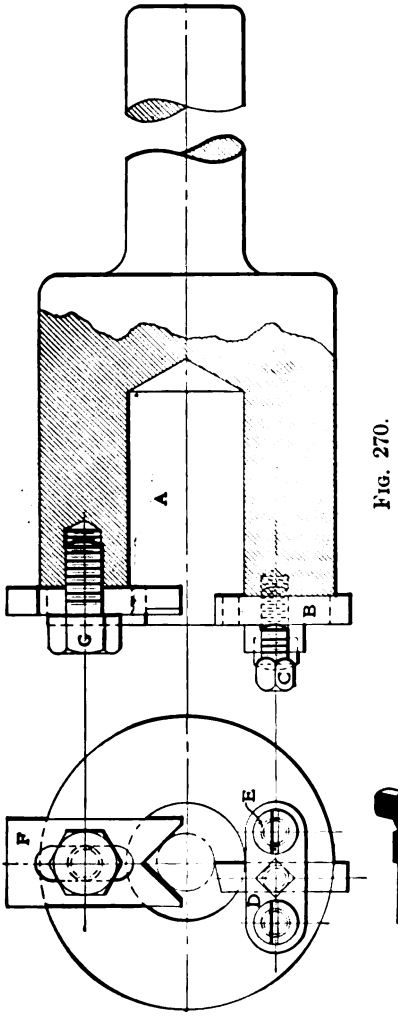

FIG. 270.

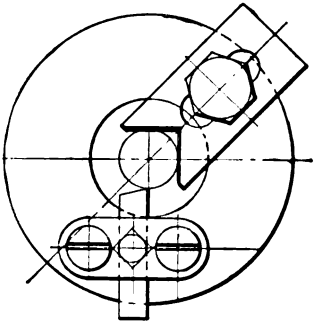

FIG. 271.

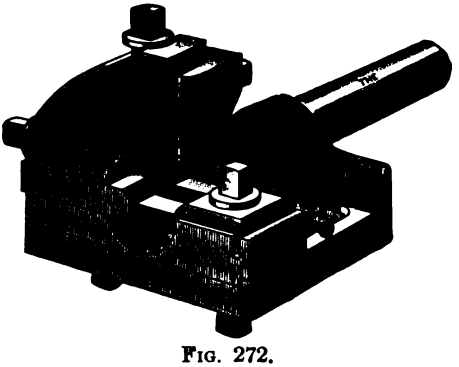

FIG. 272.

In the roughing box tool shown in Fig. 273 the cutting-tool is held in a tool-post similar to the tool-post of an engine-lathe, and it is so adjusted in relation to the work as to take a *shearing* cut. The back rest is made in two parts to admit of more accurate adjustment.

The tool shown in Fig. 274 is called a **Knee-tool.** It is used mostly on cast iron.

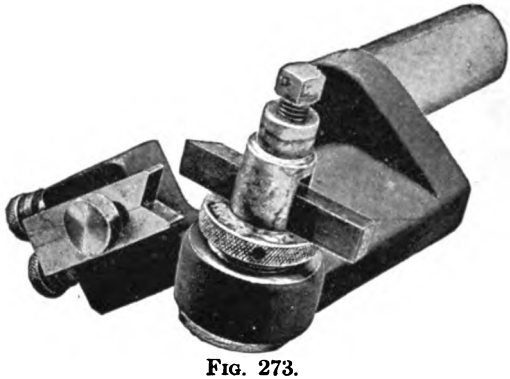

FIG. 273.

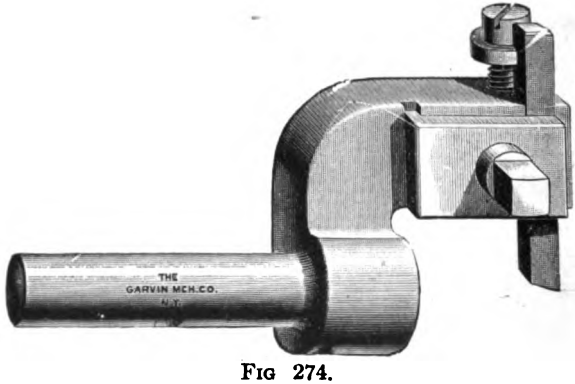

FIG 274.

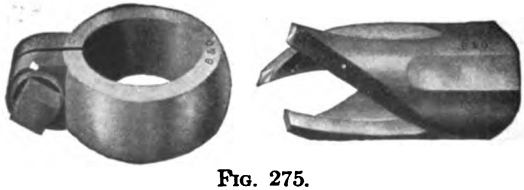

FIG. 275.

Fig. 275 shows a **Hollow Mill,** which is sometimes used instead of a roughing box tool in the turret-machine. It may be adjusted by the collar and set-screw shown.

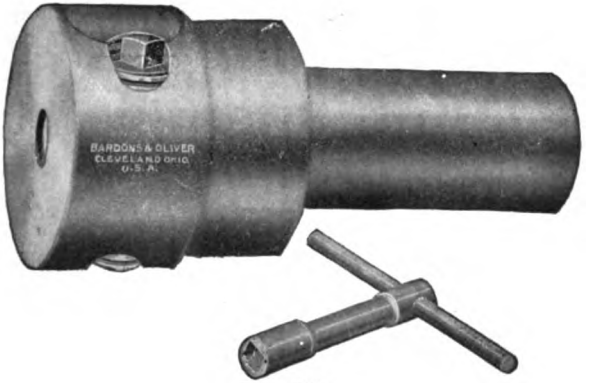

FIG. 276.

FIG. 277.

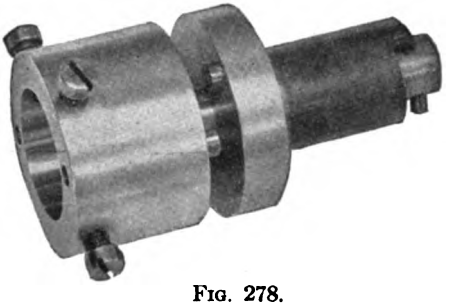

FIG. 278.

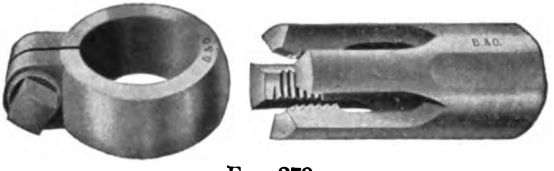

FIG. 279.

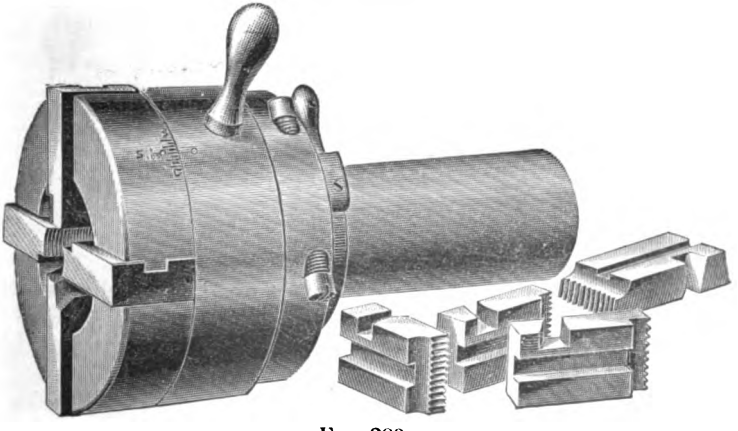

FIG. 280.

Drills may be held in a plain holder one end of which fits the drill and the other end a hole in the turret, or they may be held in a drill-chuck like that of Fig. 276.

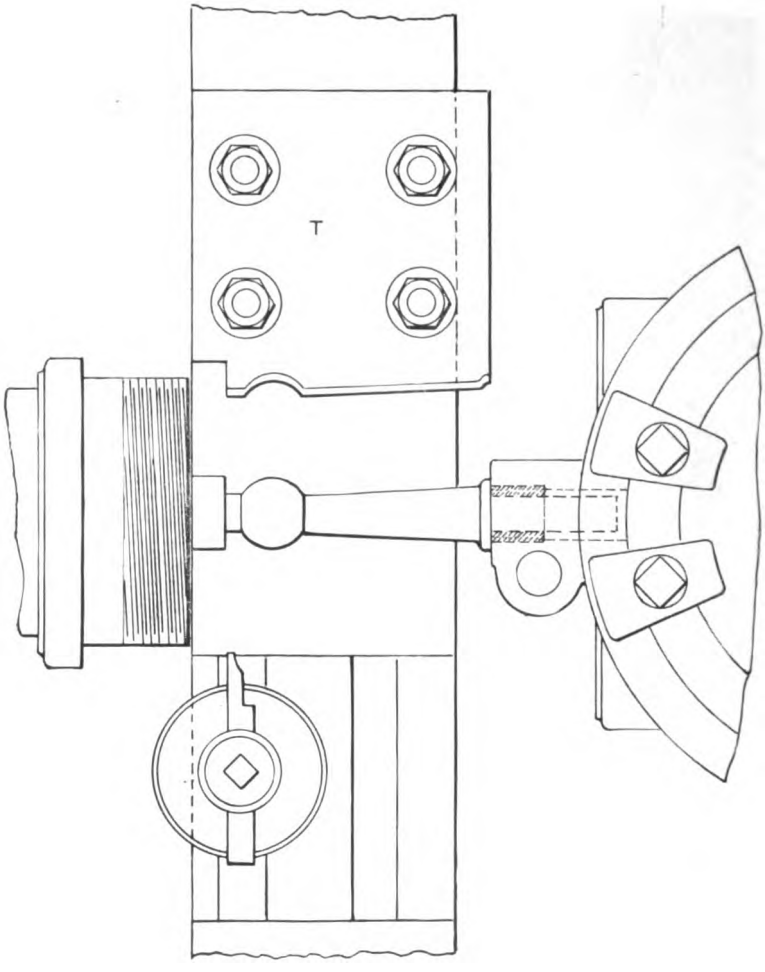

FIG. 281.

Thread-cutting in the Turret-lathe.—Thread is usually cut in the turret-machine with a die. Figs. 277 and 278 show respectively a die and a *releasing* die-holder.

The Spring-die shown in Fig. 279 may be adjusted by the split collar. This die is also held in the holder of Fig. 278.

The Geometric Screw-cutting Die-head illustrated in Fig. 280 is self-opening and adjustable. The small end or shank which enters a hole of the turret is hollow and admits of cutting any length of screw within the capacity of the machine upon which it is used. Stopping the travel of the turret-slide automatically opens the die. It is closed again by the handle shown, or by automatic connection.

FIG. 282.

Forming-tools.—In Fig. 281 is shown a forming-tool *T* secured to the cross-slide of a Garvin Universal screw-machine. One end of the piece to be turned is supported in a center-rest held in one of the turret-holes. An adjustable center-rest is shown in Fig. 282.

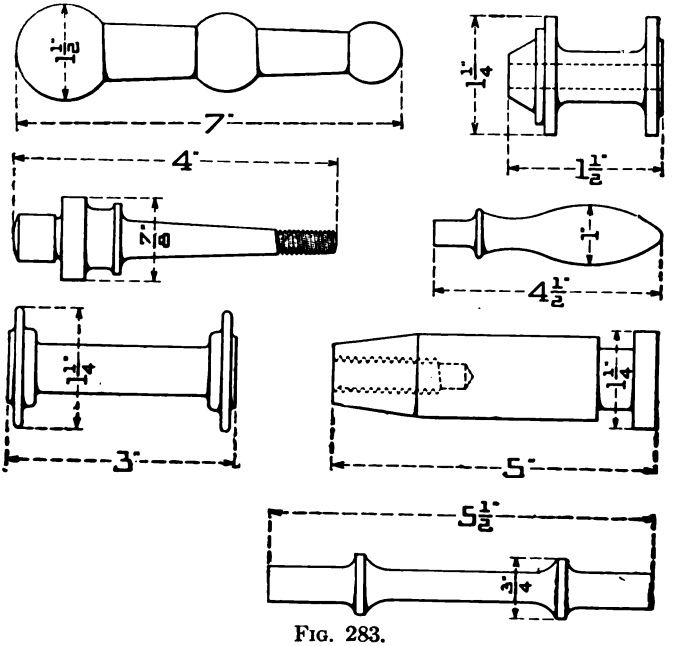

FIG. 283.

A great variety of forming-tools are used in connection with turret-machines, and Fig. 283 shows samples of forming-tool work.

Fig. 284 shows one of the "turners" used in connection with the turret of the flat turret-lathe. The cutter of this turner is held in a

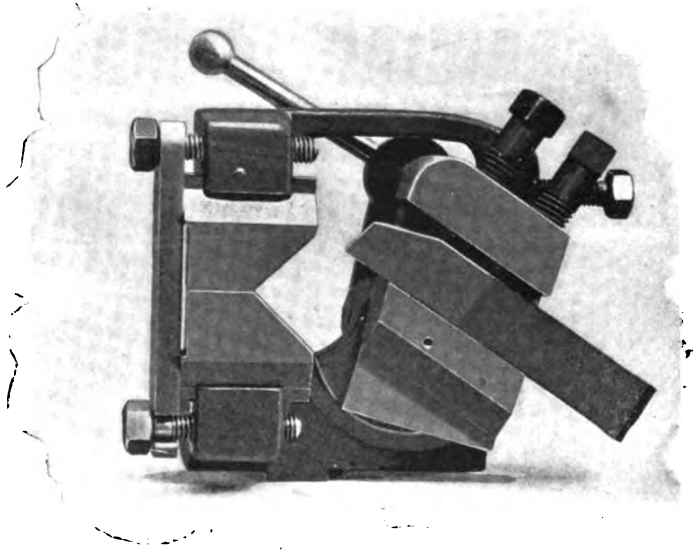

FIG. 284.

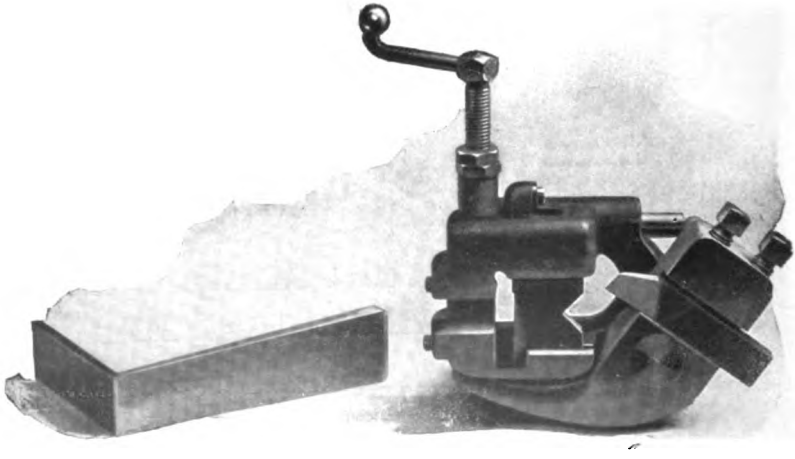

FIG. 285.

pivoted tool-block the frame of which is secured to the turret. By means of an adjusting-screw, work from 0 to 2 inches diameter may be

turned after the tool has been clamped. To prevent the work from being marked, when the turret-slide is moved back, the tool may, by means of the spherical end lever shown, be withdrawn.

A Taper Turner and Former used on the machine last referred to is shown in Fig. 285. The cutting-tool and back rest are controlled by the former or template, which is planed tapering in thickness and width, thus forming two wedges, one of which controls the cutting-tool and the other the back rest. This turner turns tapers and other forms, a different template being used for each different form.

CHAPTER XIII

LATHE- AND PLANER-TOOLS

A Standard Set of Lathe-tools.—The term *machine-tool* refers to the machine proper, as, for instance, the lathe or the planer. The terms lathe-tool and planer-tool have reference to the steel tools used to cut

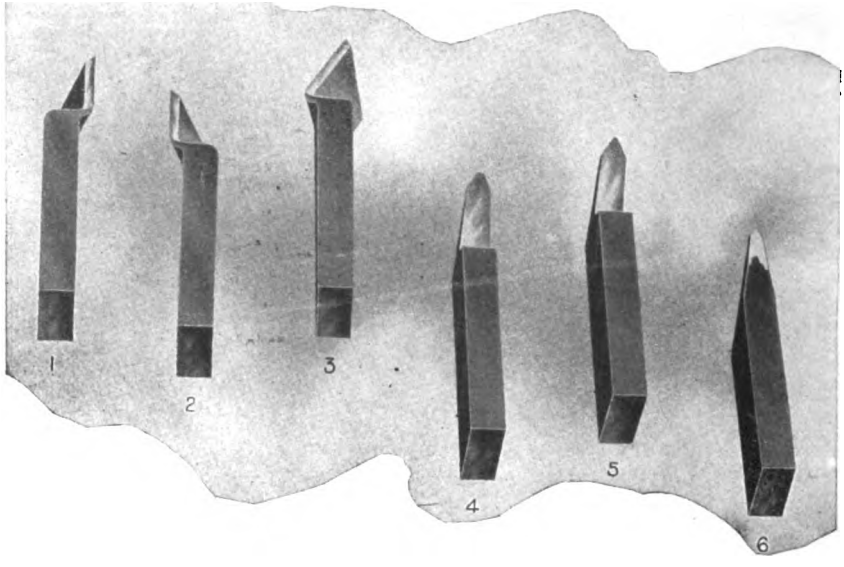

FIG. 286.

the metal. These tools, which do not include those of the turret-lathe, are, with rare exceptions, held in the tool-post or tool-block of the common lathe or planer. In Figs. 286 and 287 we show a standard set of lathe-tools, the names of which are as follows: No. 1, left-hand side tool; No. 2, right-hand side tool; No. 3, bent right-hand side tool; No. 4, roughing-tool; No. 5, finishing-tool; No. 6, diamond-point tool; No. 7,

round-nose tool; No. 8, cutting-off tool; No. 9, thread-tool; No. 10, bent thread-tool; No. 11, inside thread-tool; No. 12, boring-tool.

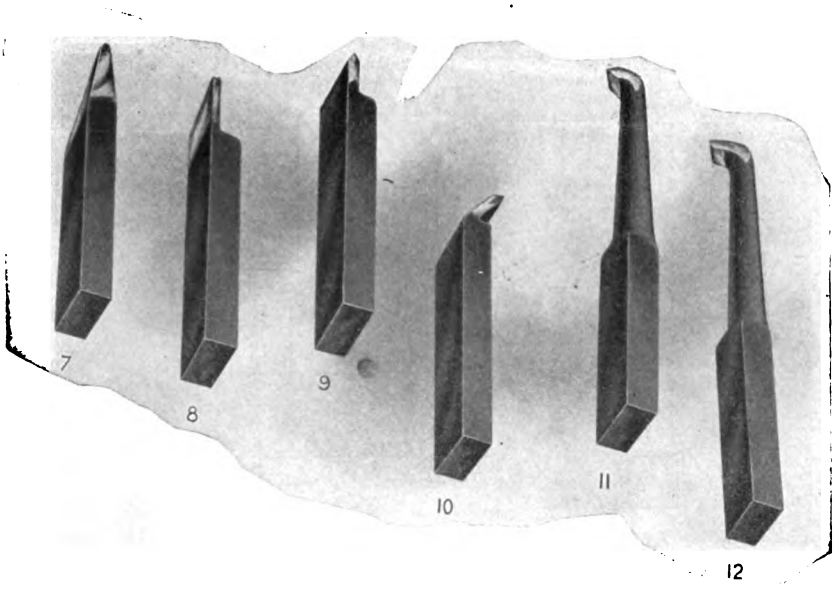

FIG. 287.

The above list of tools is referred to as a standard set; but there is no standard that is generally recognized, and we show in Fig. 288

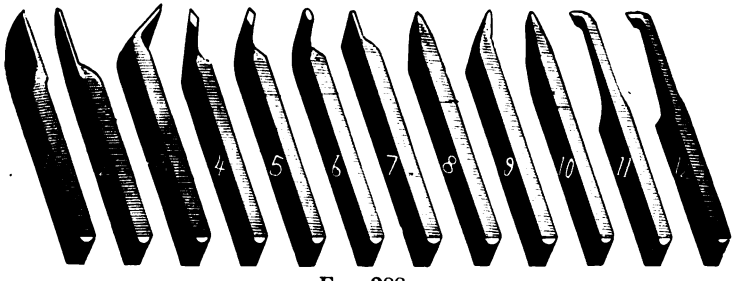

FIG. 288.

twelve lathe-tools which are regarded as a regular set by other authorities. These are named as follows: No. 1, left-hand side tool; No. 2, right-hand side tool; No. 3, right-hand bent; No. 4, right-hand diamond-point; No. 5, left-hand diamond-point; No. 6, round-nose; No. 7,

cutting-off; No. 8, threading; No. 9, bent threading; No. 10, roughing; No. 11, boring; No. 12, inside-threading. Of the latter Nos. 1, 2, 3, 7, 11, and 12 are intended to be of the same shape respectively as Nos. 1, 2, 3, 8, 11, and 12 in the first set. The threading-tools in both sets are the U. S. standard.

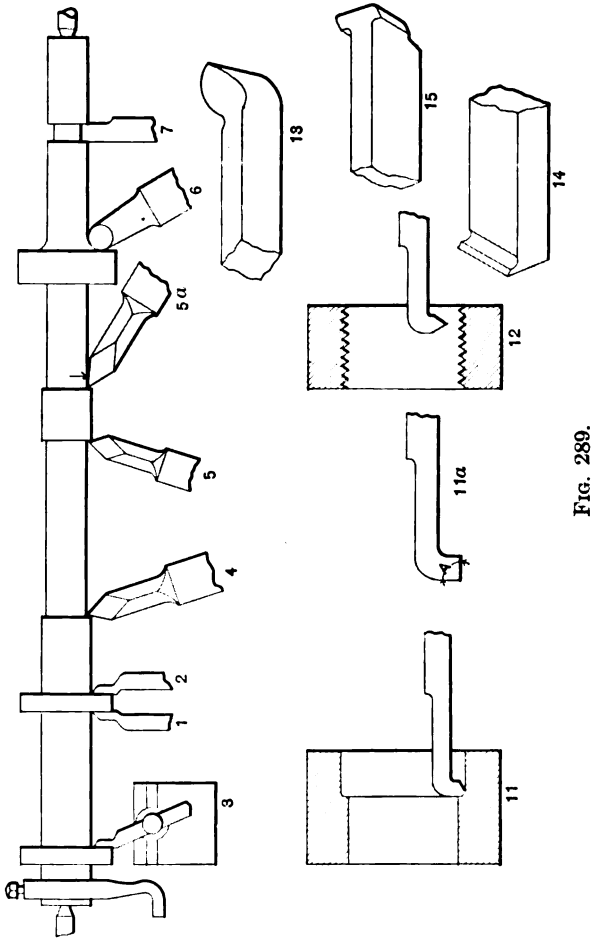

Fig. 289.

Uses of Various Lathe-tools.—Respecting the use of the tools in Fig. 288, No. 1 is suitable for facing or turning the left side of a collar, as shown in the plan at (1) in Fig. 289, while No. 2 is used for facing the right side of same, or the right end of a shaft. These tools may also be used for facing at other angles than those shown. Tool No. 3

is designed for facing on the right side close to the lathe face-plate. It is bent in order to permit the tool-rest to clear the lathe-dog, as at (3). The diamond-point tools (4) and (5)* are used to take roughing cuts, the top face of No. 4 being inclined toward the right, making it cut advantageously, or with rake, on the left. The cutting directions of these tools are shown at (4) and (5) in Fig. 289. The diamond-point tool may be used, also, for smoothing or finishing cuts (see under "Feeds," page 173) by adjusting it so that one side will have *nearly flat contact* with the work, as at (5*a*). No. 5, Fig. 286, is used in the same way for finishing The tool marked (6) may be used for rounding out a fillet, and for similar purposes: see (6) in Fig. 289. No 7, as its name indicates, is used for cutting off a shaft, this operation being shown at (7). For ordinary work it should be $\frac{1}{16}$ to $\frac{1}{8}$ inch wide. It may also be used for smoothing cuts and for squaring a corner under a collar. For these purposes it is usually made about $\frac{3}{16}''$ wide. No. 8 is designed for thread-cutting, but when the thread is near the face-plate end of the work No. 9 should be used. These two tools are held in the tool-post like Nos. 7 and 3 respectively. No. 4, Fig. 286, is used by some mechanics in preference to Nos. 4 and 5, Fig. 289, and instead of No. 10. It is less difficult to forge than the first two, and it is well adapted to moderate roughing cuts, both in crosswise and longitudinal turnings. The side tools described are used mainly for the light smoothing cuts. For internal work we use No. 11 for boring and No. 12 for threading, as shown at (11) and (12) in the illustrations of Fig. 289. For squaring up a shoulder the boring-tool is shaped like (11*a*). The angle *A* of this tool thould be *less than* 90° to insure reaching the *extreme corner*, and also to lessen the tendency to chatter. By grinding this tool with the proper clearance, it may be used, also, for internal square threads. Some mechanics prefer the tool shown at (13) to the diamond-point tool for heavy work. For smooth cuts and fast feeds on heavy work (14) shows a good design.

Planer-tools.—Of the tools shown in Figs. 288 and 289, Nos. 1, 2, 3, 4, 5, 6, 7, 10, 13, and 14 are also used on the planer in the same manner that they are used in the lathe. For roughing down vertical faces the *stocking*-tool, No. 15, Fig. 289, is a good form. Various special tools are made for both planer and lathe; these have special shapes to suit the requirements of each case.

Tools for Brasswork.—The tools in Fig. 288 are adapted to all the metals in common use except brass. Nos. 7 to 12 inclusive may be used

* The points of these tools should be ground slightly rounding.

for brass if the top cutting face be kept *flat* and *horizontal.* In addition to these, the tool illustrated, Fig. 290, may be used on brass for longitudinal and crosswise roughing and finishing cuts. For squaring under

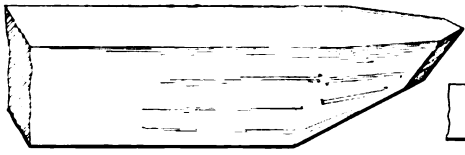

FIG. 290.

FIG. 291.

a shoulder the cutting edges of this tool should be ground to a point, and somewhat less than 90°.

Fig. 291 shows the top view of a brass tool which is used by some mechanics for longitudinal and cross feeds. This tool should be flat on top and have clearance on the front end and on the concave side.

Tool-holder Plan.—The foregoing system, in which the tools are forged from bar stock, is being superseded to a considerable extent by the *tool-holder plan.* In this system a number of tool-steel cutters are used interchangeably in one holder, the latter being made of cheaper metal. These

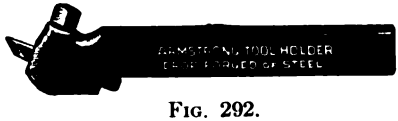

FIG. 292.

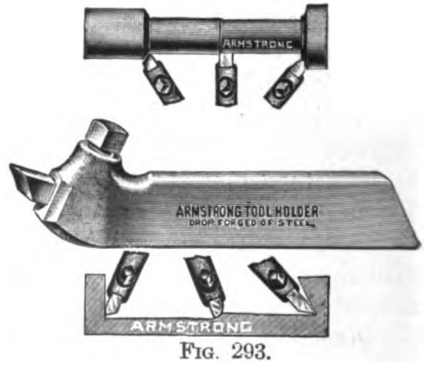

FIG. 293.

cutters are made of sizes and shapes which are kept in stock in all grades of tool-steel by the dealers. The cutters require no forging, being ground on the emery-wheel to any ordinary shape. Self-hardening steel is generally used for the cutters, and this requires no tempering.

Fig. 292 shows a tool-holder and cutter. The cutters are held by a set-screw at an angle which is considered about right for average requirements. Generally it is not necessary to grind the top faces of these

cutters, but they may be ground to give negative or zero rake for brass-work, or be changed for any other special case. The uses of these tools

FIG. 294.

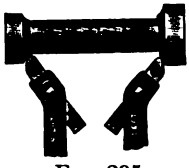

FIG. 295.

FIG. 296.

in various ways, both for lathe and planer work, are shown in Figs. 293, 294, 295, and 296.

Boring-tool Attachment for Lathes—Boring Deep Holes.—A very substantial boring device is shown in Fig. 297. In this device *A* is a kind of clamping fixture, which takes the place of the ordinary

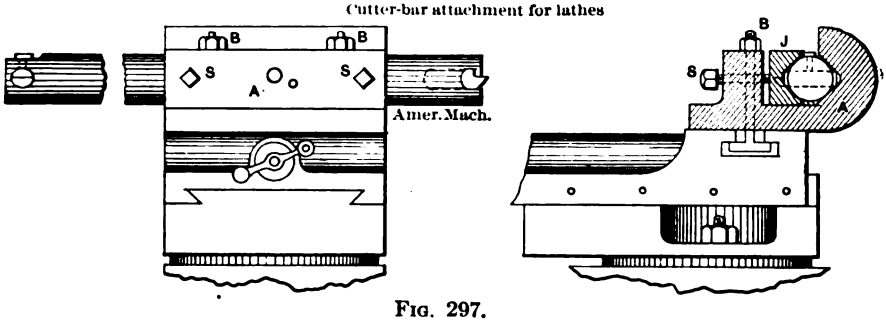

FIG. 297.

tool-post, being held on the lathe-rest by the bolts *B*. The tools or cutters are secured in either end of the bar or tool-holder, as shown

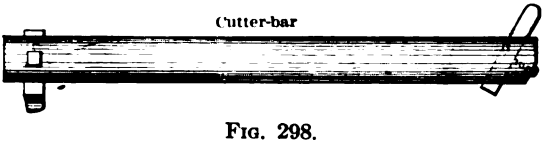

FIG. 298.

in Fig. 298. The fixture *A* will hold different sizes of bars, which are clamped by the set-screws *S* and movable jaw *J*. The overhang of the bars may be gaged to suit the length of hole.

When boring extra long holes with a common boring-tool, the springing of the tool makes the hole tapering. To compensate for this error the experienced mechanic feeds the lathe-carriage both forward and backward, and takes very light cuts to bring the hole to the finished size.

A reamer would, of course, save time, but such a tool is not always available for special sizes. The device shown in Fig. 297 is much superior to the ordinary boring-tool. By making the cutter with two cutting edges (one on each end), and taking a double cut, the bar is braced against deflection and parallel boring is made easy. The author has sometimes used double cutters instead of a reamer. For this purpose the cutter should be turned in its bar between centers. To prevent *chattering* and make a smooth hole, the cutter should be filed with minimum heel clearance, and after being tempered it should be carefully oilstoned. If the cutter be held with a taper-pin fitting a notch near the center of the cutter, it may be very quickly adjusted in the bar. Cold-rolled steel or tool steel, used without being machined, will answer for the bars.

Planer-tool with Angular Adjustment.—Any of these tools, excepting the boring-tool, may be used on the planer; but the tool shown in

FIG. 299.

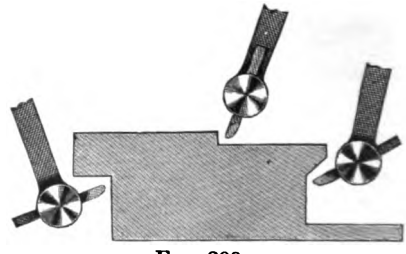

FIG. 300.

Fig. 299 is *specially* adapted to planer work. Fig. 300 indicates how this tool may be adjusted to different angles in the latter work.

Gang Planer-tool.—This tool, which is illustrated in Fig. 301, is designed especially for planing *broad flat surfaces*. The tool-head, carrying several cutters, is adjustable on the shank. By properly adjusting the head a coarser feed as compared with a single cutter may be used. This is accomplished by *dividing* the cut as shown in Fig. 302. With a given feed, say $1/8''$, the head should be so adjusted as to divide the cut equally between the number of cutters used. The cutters should be ground to uniform shape, and should be so set as to bring the lower ends in the same horizontal plane, a flat plate or surface being used for this purpose.

Figs. 303 and 304 show a side tool and a cutting-off tool respectively. These may be used for both planer and lathe work. When the holders are offset they are better adapted to lathe work.

Thread-tool and Holder.—In Fig. 305 is shown a good design of tool for thread-cutting. The cutter, which is held by the two set-screws as shown, is shaped to the angle of the U. S. standard thread (60°) and

FIG. 301.

FIG. 302.

FIG. 303.

FIG. 304.

is to be ground on the top face only. The cutter should be so ground and set that a line coincident with its top face would pass through the axis of the central clamping-screw and be parallel with the bottom of the holder. The same line should pass through the axis of the work.

The Rivett-Dock Thread-tool.—In cutting threads with one single-pointed tool, or even with one roughing and one finishing tool, considerable time is expended in grinding the tools to a gage, adjusting them in the lathe, and in gaging the work. The thread-tool shown in Fig. 306 is designed to overcome, in a great measure, these difficulties. For each pitch of thread a disk cutter, having a number of teeth of the correct angle, is furnished. These disks are interchangeable and may be secured to a holder which, when in use, is mounted on the tool-block of the lathe as shown. Each tooth traverses the thread once, the first cut being made by tooth No. 1, the second by No. 2, and so on, until all the teeth in the disk have been brought into contact with the thread. The last tooth, which is the only one that conforms to the final shape of the thread (the others being broader at the point), cuts the thread to the *required shape* and diameter.

FIG. 305.

Each tooth is brought into position in turn, by the lever shown.

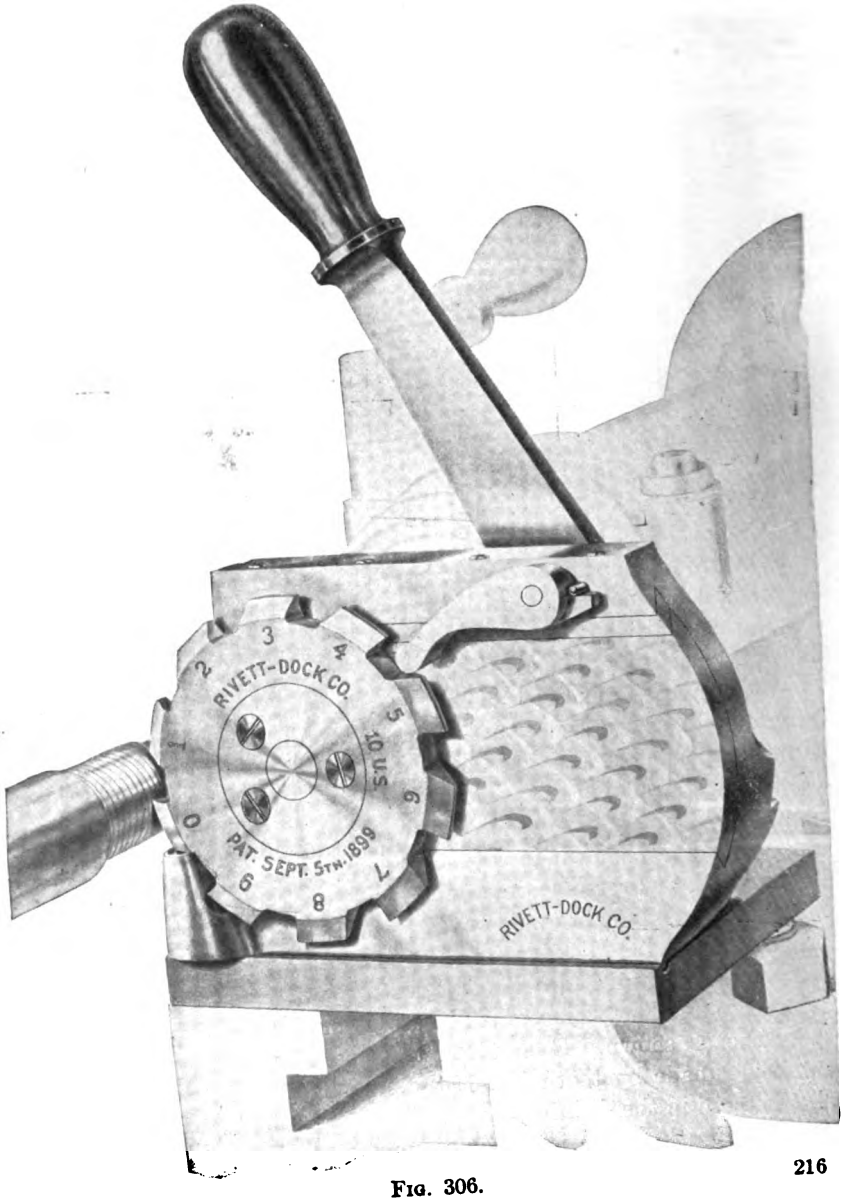

FIG. 306.

By means of this lever and its ingenious connections, the disk is rotated, advanced to the work, and locked for each cut.

For extra-accurate threading, such as is necessary in making *taps*, and for fine finish, it may be necessary to divide the last cut into two or more finer cuts. The tool is provided with *micrometer* adjustment for this purpose. It is furnished, also, with *side-rake adjustment* for right and left threads.

Multiple-edge Tools.—The tool above described might be called a turret thread-tool, the principle of action being that of the turret-machine. In the chaser-edge cutter, Fig. 307, the holder of which

FIG. 307.

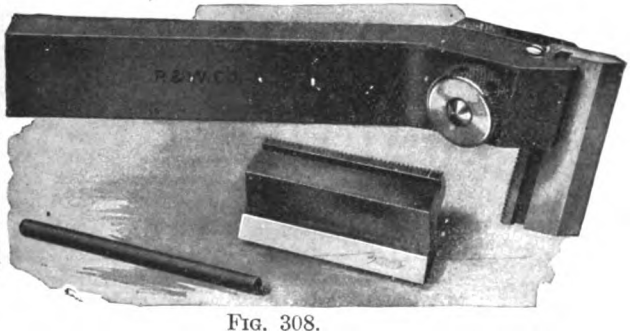

FIG. 308.

is shown in Fig. 308, all of the teeth are in contact with the thread at the same time. This reduces the wear on each tooth and accomplishes some of the purposes of the tool shown in Fig. 306.

The possibilities of multiple-edge tools are not fully appreciated. These tools may be used for lathe, planer, shaper work, etc. If, for instance, three grooves were required to be cut in a shaft, a cutter and tool-holder could easily be made (and, indeed, is sometimes made) to cut all the grooves in one operation. A tool could as easily be made to cut several grooves simultaneously in the planer or shaper.

Fig. 309 shows a piston-ring being turned on the inside and outside in one operation. Two boring-bars, each carrying an adjustable cutter, are used in this case. A forked tool-holder with cutters held by set-screws is sometimes used for work of this character. Fig. 310 shows such a holder, but the adjustable cutters are held by a plate and one screw. Fig. 301 might be classed with multiple-edge tools.

Advantage of Backward Offset in Planer-tools.—Fig. 311 * shows a

* Cut first used to illustrate an article by "Theodore" in "American Machinist," vol. 27, page 290.

tool-holder and cutter designed for planing lathe V's. When the cutting edge of the tool has a *broad* bearing on the work this backward offset

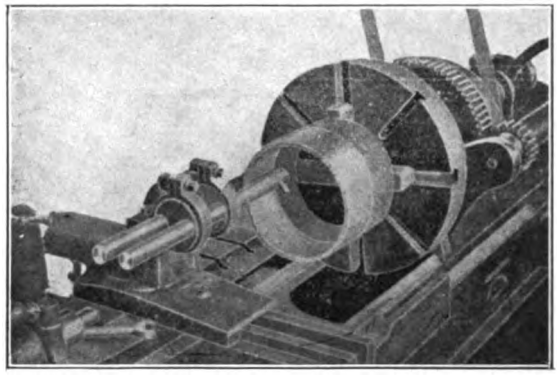

FIG. 309.

has an important advantage. The strongest tool-holder must spring to a slight degree, but when it is made as above it springs from the

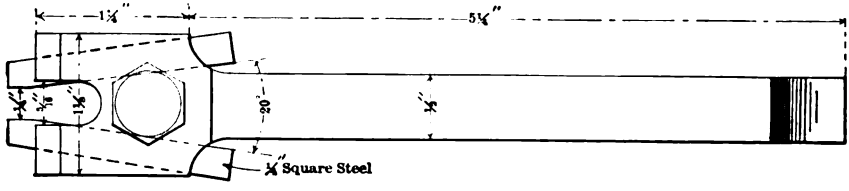

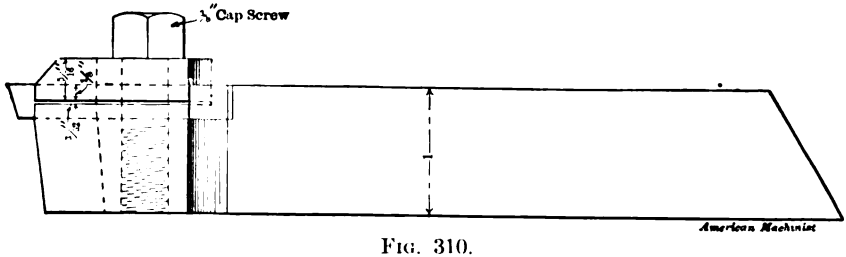

FIG. 310.

work, and this in a large measure prevents *chattering*. This tool shows how cutters for shaping large curves and other forms, may be made very cheaply. The cutter requires but a small piece of high-grade steel

and it is held by one bolt and a dowel-pin as shown. *Any number* of cutters may be used separately in the same holder.

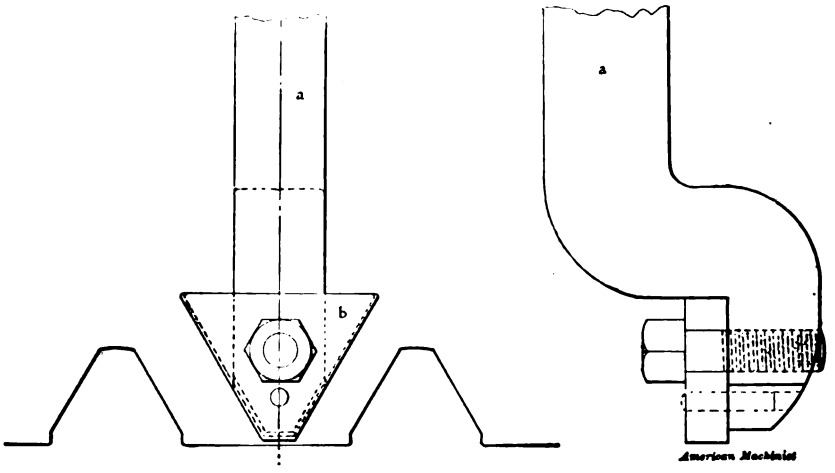

FIG. 311.

Spring-tools for Lathe-work.—The principle of the above tool is sometimes employed in a lathe-tool. For lathe work, however, the tool is shaped as shown in Fig. 312, which represents a *spring* thread-tool.

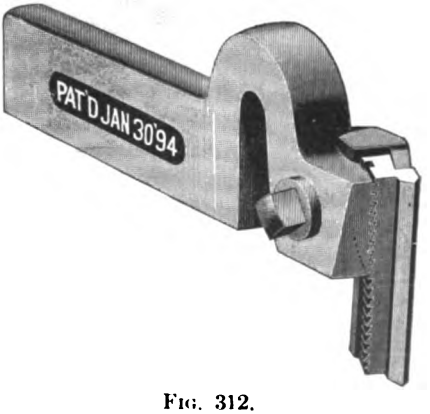

FIG. 312.

Rake and Clearance of Lathe-tools.—One of the most important considerations in connection with lathe- and planer-tools is the proper inclination of the cutting face to the work. For most purposes the tools should be so shaped as to *peel* the metal off, somewhat *as a plow turns the soil*. When a tool is so shaped as to produce this effect it is said to have "rake." A more precise explanation of the use of the term rake is given in connection with the illustrations in Figs. 313, 314, and 315. Referring to these figures, Fig. 313 is a side view of a cylinder or shaft as held between lathe-centers, and in connection with same is seen a vertical section through *CD*, Fig. 314, of a side tool.

Fig. 315 is a cross-section of a cylinder with a longitudinal vertical section of a lathe-tool. Assuming in all cases that the point of the tool is set on a level with the axis of the lathe-spindle, in Fig. 313 the

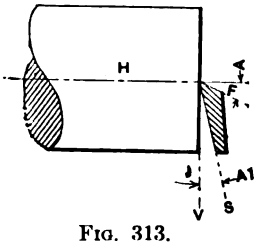

Fig. 313.

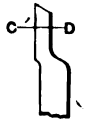

Fig. 314.

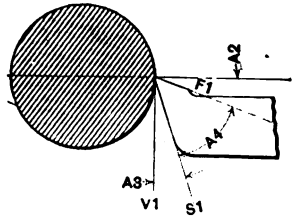

Fig. 315.

angle A, formed by the horizontal line H and face F of the tool, will, in this work, be called *right rake*, while the angle A 1, between the vertical line V and side S, will be called *right clearance*.* The similar angle and clearance on the opposite side (not shown) will be called *left rake* and *left clearance*. In Fig. 315 the angle A 2, formed by the horizontal line H passing through center of the shaft, and by the top face F 1 of the tool, will be called *front rake;* the angle A 3, between the vertical line V 1 and the front side of the tool S 1, will be called *heel-clearance*, and the angle between front side S 1 and the top face F 1 will be called the *cutting angle*. The above explanations refer to the lathe-tools. The rake and clearance on planer-tools are measured from vertical and horizontal planes in practically the same way, and may be called by the same names.

Changing Height of Tool Changes Angle of Rake.—As stated, it is assumed in the above that the points of the lathe-tools are to be set

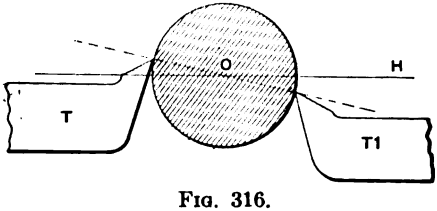

Fig. 316.

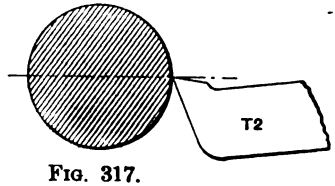

Fig. 317.

on the level of the lathe-spindle axis. We will now investigate the effect of deviating from this position. In Fig. 316, let O represent

* Left and right clearance ~~means~~ left and right *side* clearance. The term rake, sometimes applied to the angle of clearance, is not so used in this work.

a cross-section through a cylinder as before, *T* the lathe-tool set above the center, and *T* 1, on the opposite side, a similar lathe-tool set below the center. *H* is a horizontal line. It is easily seen that the "effective" front rake is much greater in *T* than in *T* 1. Again, in Fig. 317 let *T* 2 be tipped * in the tool-post to bring the point to the center, and the effective front rake is again changed.

Side Clearance Varies with Change in Diameter and Feed.—Joshua Rose, in "Modern Machine-shop Practice," has called attention to a fact respecting side clearance which is often overlooked. In Fig. 318 let *T* 3 represent a section of a tool the same as in Fig. 313, excepting that it is being traversed in the direction of the arrow, at the rate of $^1/_{100}$ of an inch for each revolution of the shaft. In Fig. 319 let *T* 4 have the same *nominal* side clearance, and let it traverse in the same direction at $^1/_4$" per revolution. The *effective* side clearance for the two cases differs considerably, as shown in the illustrations. It differs also with every change in diameter of work.

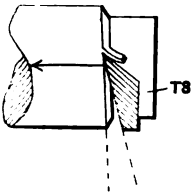

FIG. 318.

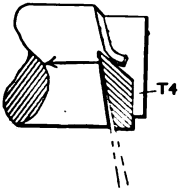

FIG. 319.

Clearance and Rake for Average Requirements.—From the above considerations, and from the fact that different densities of metals require different angles of rake, it is evident that in determining the best shape of tool to cover a considerable range of work we must compromise between conflicting requirements. The various *roughing tools* * which are designed to remove the bulk of the metal are the most important. When the nose or cutting end of a roughing tool is presented to the work at an angle of about 60°, as indicated at No. 4, Fig. 289, little or no *right* rake is required. If the tool thus adjusted has about 24° front rake and 10° clearance, it will give fairly good results. Such a tool will also cut in the opposite direction, if oppositely inclined in relation to the work. But when the nose of the tool is set *normal* to the surface of the work, it should have both *front* and *right* rake (assuming it to be traversing toward the left). Very good results have been obtained with tools having equal front and right rake, but exhaustive experiments have demonstrated that the right

* Articles of special value on roughing tools are given in the "American Machinist" of Mar. 5, '03, Mar. 8, '06; and Jan 10, Feb. 14, Feb 21, Nov. 7, Nov. 14, and Nov. 21, 1907.

rake should be the greater. To get the best results the tools should, of course, be shaped differently for different materials. For metals ranging from cast iron and the harder grades of steel to wrought iron and extra soft steel, the front rake might be the same for all the tools, viz., 8°. But the right rake should vary in the different tools from about 12° for the hard to about 24° for the softer materials. The right clearance and heel clearance should be about 8° and 10° respectively, for all the tools. If, however, it were required that one tool should answer for this range of work, the tool shown in Fig. A would, perhaps, be a good compromise. The right rake of this tool varies from the *average* of the angles given for hard and soft metals in favor of the hard. The *dotted line* shows how the heel of the tool might be cut off to *lessen the work of grinding.*

The angles of rake and clearance given for the tool shown in Fig. A will answer for *finishing* tools and other traversing tools used for *light*

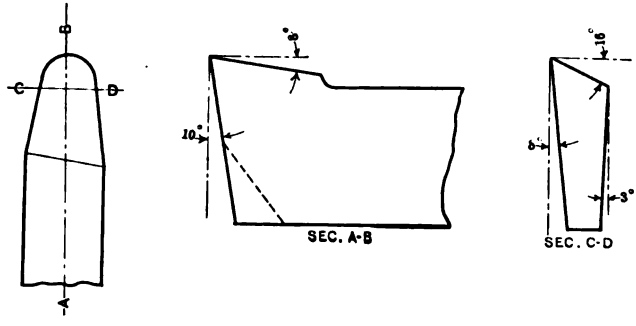

FIG. A.

cuts. However, there will be no marked difference in the quantity of work produced by such tools if they are made with considerably less rake. Instructions for shaping various **thread-tools** are given on pages 285 to 292. These instructions show that **V-thread tools** may be made *with rake or without it.* **The cutting-off tool,** No. 7, Fig. 288, should have front rake, though often made without any rake. The right and left clearances of this tool may each be about 3°, and the heel clearance may be 10°. To work without undue friction, the blade must be slightly narrower where it joins the body than at the point.

The regular side tools, Nos. 1, 2, and 3, Fig. 288, are commonly made with as much clearance and right or left rake as are roughing tools, but they require no front rake. **The diamond-point tools** of the

figure last referred to, when used on *heavy work with fast feeds*, should have the *points rounded* somewhat like the point of the tool shown in Fig. A. They should also be similar to Fig. A with respect to rake and clearance, when used for the same range of work. A *long slender shaft*, unless supported by a follower-rest, is likely to chatter and spring if the *tool contact* be *excessive*. For such work fine feeds and tools with points but slightly rounded are generally necessary. If a tool having rake is used for **cutting brass,** the carriage and cross-slide gib-screws must be snugly adjusted, otherwise the tool will gouge into and mar the work. To prevent this trouble *tools for brass are rarely given any rake*, but they usually have ample clearance, as indicated in Fig. 290.

Rake and Clearance for Exceptional Cases and for Planer Tools.—The keen edge proposed for ordinary tools would be very quickly destroyed in cutting *chilled iron*. The cutting angle of tools used for this work should be but little less than 90°.

All that has been said concerning the *rake* of lathe-tools will apply equally well to *planer-tools*. But these tools should not be fed to the work while cutting, and for this reason they require *less clearance* than lathe-tools. From 3° to 6° will be about right for both heel and side clearance.

Lubricants Used in Turning, Drilling, etc.—All operations on cast iron, such as turning, drilling, reaming, etc., are usually performed dry, but some mechanics tap cast iron with oil, and others advocate the use of water in turning cast iron. All the above operations on wrought iron and steel may be performed in connection with oil or some cheaper mixture, except that lard-oil should be used in reaming. To avoid the dirty condition of the lathe which results from the use of oil or soda-water we frequently turn wrought iron and steel dry. All operations on brass may be performed dry, except that some machinists prefer to use oil in tapping brass. Copper should be machined dry, except that in reaming lard-oil should be used. In turning, drilling, etc., in Babbitt metal no lubricant is required. In drilling glass use turpentine or kerosene oil.

A cheap compound may be purchased for use in lubricating and cooling cutting-tools. The air blast is sometimes used for the latter purpose.

CHAPTER XIV

LATHE-CENTERS, WORK-CENTERS, ETC.

Ideal Condition for Lathe-centers.—The proper care of lathe-centers and work-centers is of such importance that it seems well to emphasize it by devoting a chapter to the subject. In grinding work between centers on the universal grinder, both centers are stationary, while the work revolves. The centers cannot, under these conditions, affect the concentricity of the work. This is the principle upon which lathes doubtless would be constructed if there were not serious practical difficulties in the way. Nevertheless, as lathes are now constructed, the center in the main spindle revolves, and any eccentricity that there may be in this center is transferred to the work. The prevention of this eccentricity requires extreme care, as will be explained below.

Taper of Lathe-centers; Angle of Point, etc.—In the wood-turning lathe there is one spur-center and one center with cup point, the former being of such a shape as to cut into and drive the work. In the metal-turning lathe both centers have conical points, as in Fig. 320, and the

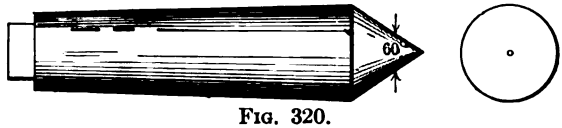

FIG. 320.

work is driven by the lathe-dog. There is no standard for the taper of the lathe-centers, but they are seldom made more than $^5/_8''$ nor less than $^1/_2''$ taper per foot. The Morse taper, given elsewhere in this book, is approximately $^5/_8''$ per foot, and this taper is sometimes used on lathe-centers.

There is a tendency toward the adoption of standards for all regular machine details, and doubtless manufacturers will at some future day adopt a standard for lathe-centers. In anticipation of this time Oscar Beale has proposed a system in which the dimensions of a taper are indicated by its number. In Mr. Beale's system the number designating

a certain size of taper expresses the number of tenths of an inch at the small end of the taper, the number of eighths at the large end, and the number of halves of an inch of its length. Thus number 10 taper would be 1″ at small end, $1\frac{1}{4}$″ at the large end, and 5″ in length.

Respecting the *conical point* of the center there is less variation in practice; nearly all machinists use 60° as the standard angle of centers for small work, though some prefer a greater angle for heavy work. It has been demonstrated, however, that 60° makes a center sufficiently strong for the heaviest work, and this should be adopted as the standard. The standard 60° gage for testing the point of a lathe-center can be bought from machinery supply stores.

It is very Important to keep the Centers True, and previous to the introduction of center-grinding machines the best mechanics would leave the live center (the center which revolves) soft, and turn it and re-turn it as often as necessary. The difficulty in this method is that in heavy work the center may, without the knowledge of the workman, be strained slightly out of true, and this would cause eccentricity in the work to be turned. A better plan is to *harden both centers,* and keep them in good condition by grinding them as often as necessary. The machines designed for this purpose are usually fastened in the tool-post like an ordinary lathe-tool, and the emery-wheel is generally driven either by a belt or by frictional contact of a small pulley with the cone pulley or face-plate of the lathe. One of the most convenient machines for this purpose is so designed that it may be adjusted for correct angle by merely supporting it between the lathe-centers and tightening the tool-post in the usual manner. This machine is shown in Fig. 321 in position on the centers as indicated. The adjustment in the tool-post should be such that this alinement of the grinder will not be disturbed when the tail-spindle of the lathe is withdrawn. When the grinder is thus adjusted, the lathe tail-stock is moved out of the way, the emery-wheel advanced to the left by the knob *E*, and the wheel brought into contact with the center by the combined movement of cross-slide and carriage. The rubber pulley *D* is next pressed against the revolving cone pulley, which should run *backwards* at its highest speed, when the grinding may be commenced. For each traverse of the emery-wheel over the surface of the center (which traverse is effected by the knob *E*) the cross-slide of the lathe is fed inward a small fraction, this process being repeated until the grinding is done.

The small emery-wheel should be "touched up" with a *diamond* as often as it becomes *glazed.*

A center-grinder has recently been introduced, which is so constructed that it may be driven by merely making connection with an *electric drop-cord.*

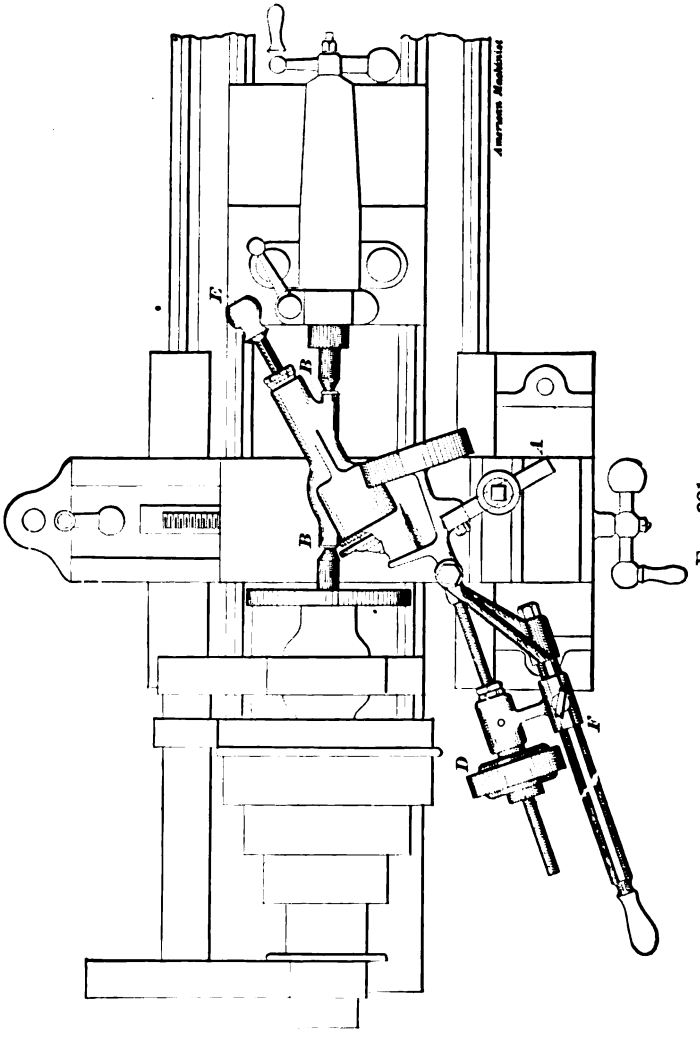

Fig. 321.

To lessen the work of grinding the centers, they are frequently turned with a shoulder as in Fig. 322.

When the point of the center breaks it must be annealed and re-turned, as the grinder is not intended for removing any considerable amount

of metal. Before inserting the center in the spindle, any *grit* that may have adhered to the body of the center should be carefully removed.

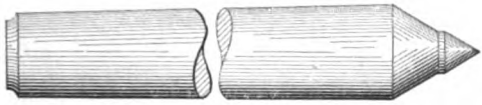

FIG. 322.

Further Precautions as to Centers.—It is impossible to exaggerate the importance of keeping the centers true. If a shaft be turned half its length with the live center eccentric, and then reversed and the other end turned, the two ends of the shaft will be eccentric with each other. The *smallest speck of grit* between the body of the center and the hole in the spindle, or between the point of the center and the center in the work, *will cause an appreciable eccentricity in the work*. To avoid this eccentricity, first, the centers should be carefully wiped; second, the spindle-socket should be carefully cleaned. This is best effected by wrapping *clean*, dry waste around a stick and *swabbing* the socket while the spindle is in motion. Third, the center should have a *witness-line* matching a similar line on the end of the spindle, and these lines should correspond when the center is in place. Fourth, the point of the lathe-center and the center in the work should *fit* and be *free from dirt*. As a further precaution the centers when removed from the lathe spindle should be placed in *wooden* brackets fastened to the lathe, or otherwise *kept from contact with other tools;* also *clean waste* should be placed in the spindle-socket when the center is removed. If mixed promiscuously with other tools, the centers will be marred or scratched, which will cause eccentricity in the work.

A slight error in the tail-center cannot cause eccentricity in the work, but it may affect the *parallelism* of the work; and a speck of grit or a scratch might cause *looseness of the center*, which would cause chattering. Both of these difficulties are to be avoided by keeping this center, also, *free from dirt and scratches*. As another safeguard against tapering work, especially in old lathes, it is well to have witness-marks for the tail-center also.

Square Centers.—In metal-turning lathes (except when a chuck is used) the lathe-dog is commonly used to drive the work. This is almost an invariable rule; but there is one exception: On very small brasswork, especially when it is desirable to turn the full length of the work without reversing it in the lathe, a square center may be used.

This center is shown in Fig. 323. The center in the work must obviously be made with a punch having a point of a shape corresponding to the

FIG. 323.

shape of the lathe-center. On diameters greater than, say, about $^3/_4''$ the resistance of the cut will generally be greater than the driving power of the square work-center; for this reason the square center cannot be used on large diameters.

The Female Center has its outer end shaped the reverse of the conical-point center, as illustrated in Fig. 324. This form of center may be

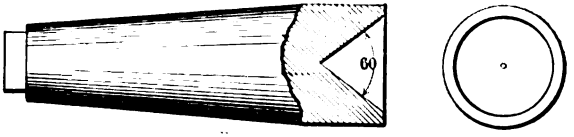

FIG. 324.

used on small work, in which case the end of the work next to the head spindle of the lathe requires no work-center. If the center in the tail-spindle be made of the same form, that end of the work could also be used without a work-center. The difficulty in this case, however, would be that the extreme ends of the work could not be machined. The female center is seldom used, but when it is used it has the advantage of truing the work automatically.

Pipe-centers. — It is sometimes necessary to thread or otherwise machine common pipe. When the ordinary lathe-centers are large enough, such work may be machined on these centers; but for the larger sizes of pipe it is necessary to have special centers. These pipe-centers are best made in two parts, as illustrated in Fig. 325. The arbor part of the metal fits the lathe-spindle in the usual manner. The conical end of the center in the tail-spindle is detachable, and revolves upon the arbor. These centers may be made to take pipes as large as 6″ diameter, or larger.

Proportions of Centers. Tools for and Methods of Centering Work. In centering a shaft or other similar detail, it is first necessary to locate

the position for the center. This may be done by means of the *center-square* or *compass-caliper* for the larger shafts, and a *bell-punch* for the

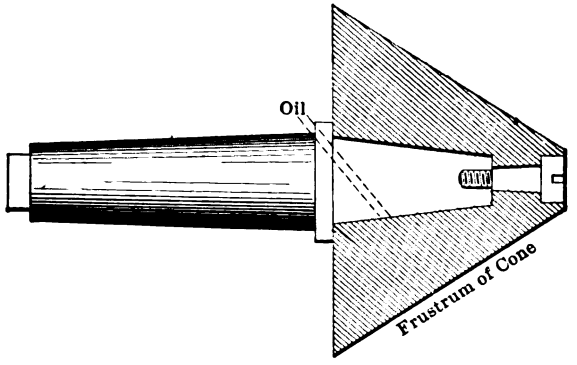

FIG. 325

smaller sizes, as explained in a subsequent paragraph. In using the latter the center is located and indented at the same time. In using the center-square or compass-caliper we merely mark a position for the center, and then indent this position with the center-punch and hammer. Having located and indented the center, we next drill and ream it. The depth of the drilled center should be such that the extreme point of the lathe-center shall clear the bottom of the hole $^1/_{16}''$ or more. The diameter of the drill may be $^1/_{16}''$ for $^1/_4$- to $^1/_2$-inch shafts, $^3/_{32}''$ above $^1/_2$- to $1^1/_4$-inch, and $^1/_8''$ for sizes larger than $1^1/_4$-inch. The countersink should be 60° angle, and the largest diameter of the countersink in the work should equal the diameter of the shaft $\times ^3/_{16}$ for sizes above $^1/_2''$ in diameter. For shafts $^1/_2''$ and less it will be sufficient to just ream away the sharp corners of the drilled center. Shafts and other work turned on centers should generally be *faced on the ends* before the longitudinal turning is started, and the drilling and reaming should be enough deeper than the above proportions to allow for the facing.

The Center-square, referred to in the preceding paragraph, is so constructed that if pressed against a shaft, as in Fig. 326, one edge of its blade will pass through the *center* of the shaft end. The center may be thus located by marking two intersectiong lines with the *scriber*.

The Use of the Bell Center-punch is illustrated in Fig. 327. The punch should be held as nearly true with the axis of the shaft as may be readily determined with the eye. If there are lumps or irregularities

on the edge where the instrument touches, these should be removed with a file, or the center would not be accurately located. There would

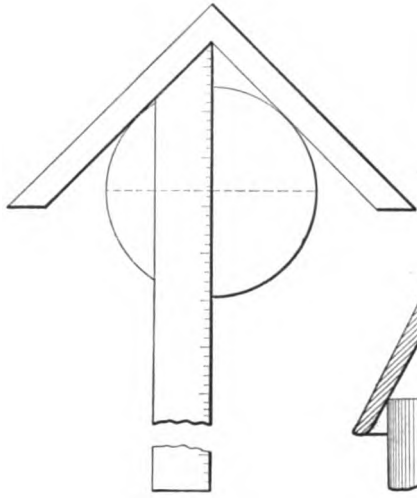

FIG. 326.

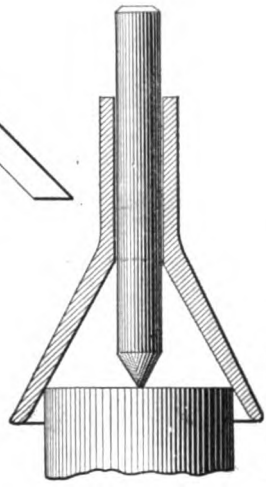

FIG. 327.

FIG. 328.

be an error, also, in the location of the center in case the end of the shaft were much out of square with its axis.

The Use of the Hermaphrodite Caliper for centering a shaft is shown in Fig. 328. For centering set the calipers to the radius of the shaft, and with the caliper leg against the periphery of the shaft describe an arc with the other leg. Describe two other arcs in a similar way. The center will thus be indicated.

Center-drills and Center-reamers. Centering-machines.—An ordinary twist-drill may be used for drilling centers, and they may be reamed

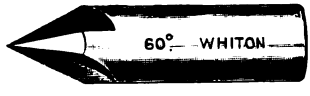

FIG. 329.

FIG. 330.

with a reamer like that shown in Fig. 329. Some prefer a drill and reamer combined, as shown in Fig. 330. The above tools may be used for centering work in a sensitive drill similar to Fig. 116, or they may be used in a lathe, preferably a *speed*-lathe. In either case the drill *generally revolves.*

When the centering is done in the lathe the work is supported at one end on the tail-center, and, if small, the work is held *by the hand* on the opposite end. More accurate drilling will result if the work be given a half-revolution back and forth several times during the drilling.

Heavy work should be securely supported at both ends; and when any cylindrical work, heavy or light, is to be centered with special accuracy, it may be driven by a *chuck* and guided on the right-hand end by

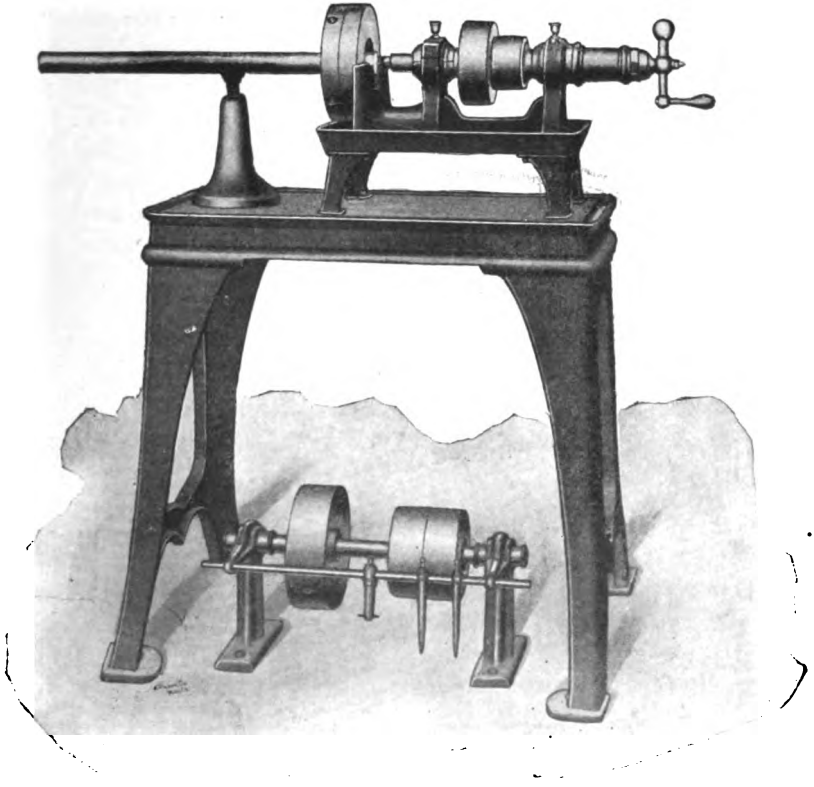

FIG. 331.

a *steady rest*, as will be explained in another chapter. In such cases the work revolves.

Fig. 331 shows a machine designed especially for centering. In centering work in this machine it is unnecessary to indent the center. The work is gripped in the universal chuck and held central with the revolving drill. The latter is supported in a socket with so little pro-

jection that there is but little chance for deflection. These drills and sockets are shown in Fig. 332. The machine is driven by the counter-

FIG. 332.

shaft shown, and the drill is fed by the handle at the right end of the head-stock.

CHAPTER XV

METHODS OF DRIVING WORK IN THE LATHE. DOGS AND CHUCKS

Driving Work by a Common Lathe-dog.—When work of the character of a shaft is to be turned on centers it is in most cases driven by a lathe-dog. To drive a shaft, for instance, the dog is placed on the end of the shaft and its set-screw tightened. It is then placed on the lathe-centers in such a manner that the tail of the dog engages with a slot in the lathe face-plate, as shown in Fig. 333, or with a stud projecting from the face-

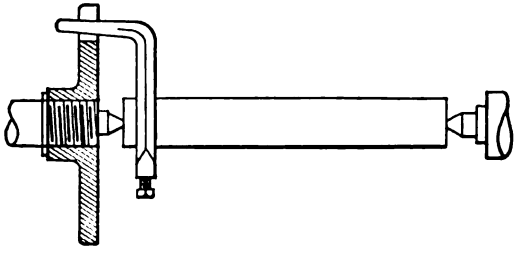

FIG. 333.

plate. In both of these methods there is a slight tendency to cramp and deflect the work, but with ordinary care either of the methods will answer passably well.

The tail of the dog should fit freely between the sides of the slot, and it *must have clearance in the bottom* of the slot. The latter is of special importance in turning work with the tail-stock set over, which is one method of turning tapering work. In using the lathe-dog for this work the tail of the dog moves back and forth in the slot, and it is, therefore, necessary to turn the lathe around slowly and *see that the dog clears the slot throughout one revolution.* Otherwise the work may be forced off the lathe centers.

Using a Double-end Dog.—To overcome the cramping tendency the double-end dog shown in Fig. 334 is sometimes used. Unless special care is exercised to see that this dog has contact at both ends its value

will be neutralized, and it will, in effect, become a single-end dog. To insure accurate contact it is well to have screw-adjustment in one of the drivers for such a dog, as illustrated in Fig. 335.

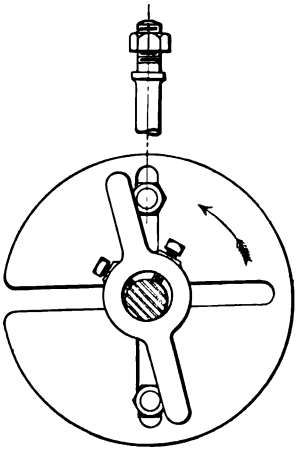

FIG. 334.

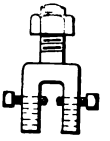

FIG. 335.

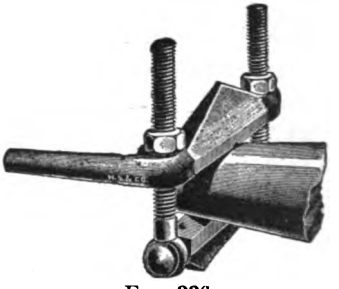

FIG. 336.

Protecting Finished Work.—When the lathe-dog is to be used on finished work the latter should be protected by placing a bit of *sheet brass* between the set-screw and the work. As a further protection, in particular cases, a *sleeve* made of sheet brass and fitting nearly around the work may be used.

Dog for Taper Work.—Fig. 336 shows a clamp dog which grips the work by two screws, neither of which touches the work. This dog is made with and without the swivel joint, but when made as shown it will grip tapering work squarely and hold well. With or without the swivel it will drive "straight" work. It will mar the work much less than the dog first described, but it should, nevertheless, be used in connection with the brass sleeve for polished work.

Dogs for Threaded Work.—When threaded work is to be turned on centers a special dog made like Fig. 337 * is desirable. This dog is split on one side, and by means of the screw *S* it may be tightened to grip the bushing *B*, which is also split. The bushing is threaded internally to fit one size of screw, a different bushing being required for each size of screw. Tightening the screw *S* closes the bushing and grips the screw which is to be driven.

* Cut taken from an article by "Cherry Red" in "American Machinist," vol. 27, page 153.

Another method consists in using the ordinary dog in connection with a *nut* which fits the thread. This nut is *sawed through on one side.* Tightening the set screw of the dog on the nut causes the latter to grip the thread of the screw.

If two nuts be used, one being tightly jammed against the other, and the dog tightened on the outer nut, neither of the nuts will need to be split.

Some workmen try to protect the thread by merely using a *brass sleeve* under the set-screw of the common dog, the same as when turning

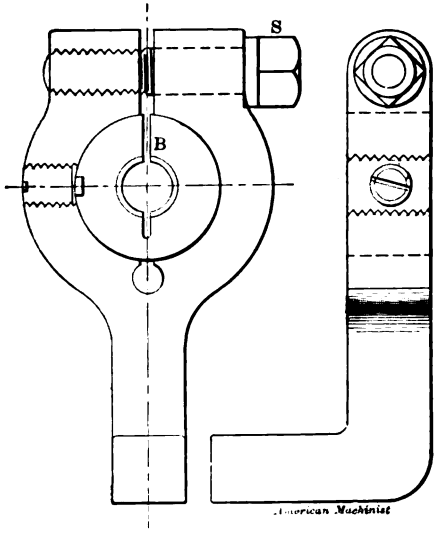

FIG. 337.

plain work. This is unsatisfactory, except, perhaps, with square threads, but even here it is not good practice. Inasmuch as a common nut sawed through on one side costs but a trifle, it is generally *inexcusable* to use the common dog and brass sleeve on either a V thread or U. S. standard thread.

The Bolt-dog.—Square sections, hexagonal sections, etc., may be driven by an ordinary lathe-dog, but when there is much of this work a special dog bolted to the face-plate as shown in Fig. 338 is preferable. This dog will drive either square or hexagonal stock, or, indeed, any section which has two parallel flat sides. It saves time in machining bolts when these are to be made by the slow engine-lathe process.

Driving Work on Centers without a Dog.—In the chapter on lathe centers the method of driving work by a square center has already been mentioned. A more accurate method is that illustrated in Fig. 339.

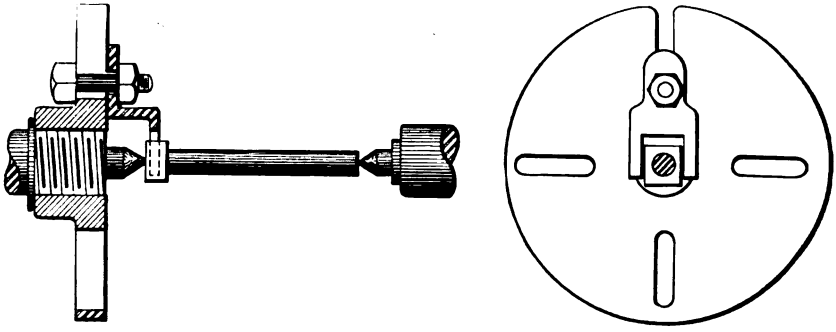

FIG. 338.

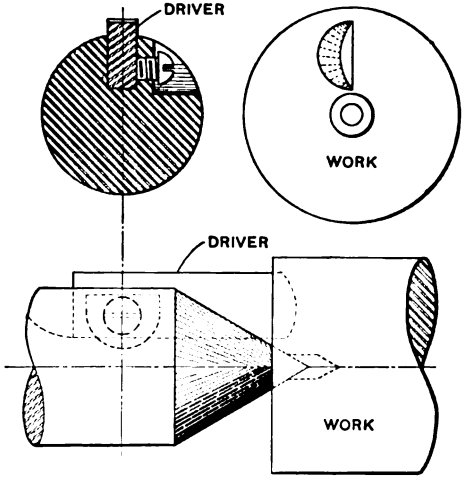

FIG. 339.

This figure shows a conical center with a *groove milled in one side* to receive a driver which is held by a set-screw. The work has a notch milled in its end to engage with the driver.

CHUCKS

Definition and Classification.—A chuck is a kind of vise designed to screw on the lathe-spindle and grip work, causing it to revolve with the spindle. Chucks are made in the *independent* type, in which the

gripping jaws are moved separately; in the *universal* type, in which all the jaws are moved simultaneously; and in the *combination* design, in which the jaws may be moved separately or together.

Independent Chucks.—These chucks are made for general work with either three or four jaws, which are usually *reversible*. For special work they are sometimes made with two jaws, and for very large work with more than four jaws. Fig. 340 shows a perspective view of a four-

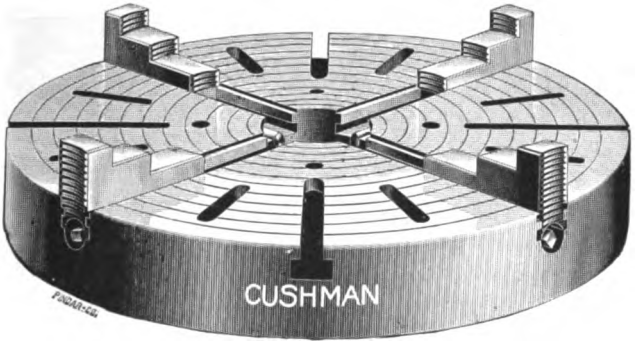

FIG. 340.

jaw independent chuck. Each jaw has three shoulders or "bites," besides the outer bite. The jaws are moved by a key or socket wrench, which fits the square ends of the screws seen just under the jaws, being guided in accurately fitting radial ways. When the jaws are placed as shown in the illustration, three different large diameters may be

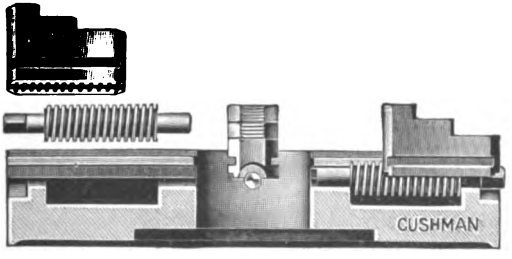

FIG. 341.

gripped on the outside and one on the inside. The jaws will, of course, close up for smaller diameters. When reversed the jaws have one outside bite and three internal bites.

Fig. 341 shows a sectional view with one jaw and one screw removed.

To remove or reverse a jaw, it is necessary only to revolve the screw until the jaw is moved radially beyond the screw-thread; it may then be withdrawn. On sliding it into the ways again, with or without reversing, and turning the screw in the right direction the threads of the screw will again engage those on the under side of the jaw.

Machining the Back Plate for a Chuck.—A chuck does not screw directly on the lathe-spindle; but a plate which screws on the spindle, is made to fit the recess on the back of the chuck. In Fig. 342 is shown

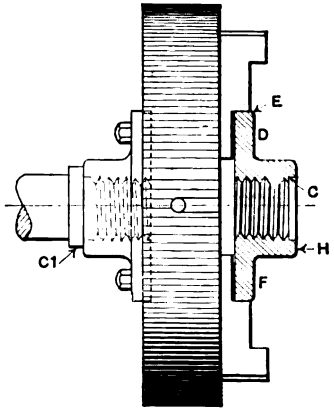

FIG. 342.

FIG. 343.

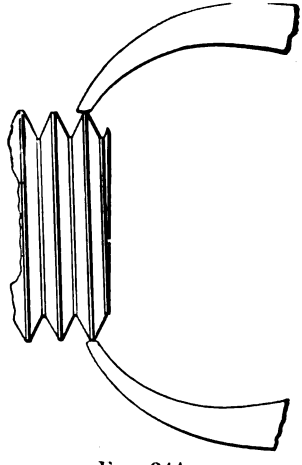

FIG. 344.

such a plate screwed on a lathe-spindle, the chuck being bolted to it in the usual manner. This figure shows also a similar plate *D*, gripped in the chuck, ready to be bored and threaded. This work is usually done by the purchaser, rather than the manufacturer of the chuck. The plate should be bored about .01″ larger than the root diameter of the thread on lathe-spindle. It should also be counterbored as at *c* to fit a blank place about $^3/_8$″ long next to the thrust-collar on the lathe-spindle. The collar referred to is lettered C 1 in the illustration. With an inside thread tool of the *proper shape*, and a wire rod filed * to a length equal to the outside diameter of the lathe-spindle thread, and tapered at the point as shown in Fig. 343, the thread may be cut and measured. The rod can be measured by common calipers, which should be set to the diameter of the thread, measured

* If filed too short the rod may be stretched by peening it near the middle with a hammer while held over a block of metal.

on an angle as shown in Fig. 344. The rod need not be made to fit the sides of the thread, but should touch on ends only. When the thread has been cut deep enough to admit of the rod or gage being *screwed* through, or nearly through, *the chuck and plate together* should be removed from the spindle and tried on the spindle for which the plate is being made. Before trying it, however, the chips should be cleaned out of the thread (preferably by a small hand-bellows), and the spindle thread should be wiped with *clean waste* which has been moistened with a *few drops of oil.* For want of oil the writer has known a chuck-plate to *seize* the spindle so firmly as to necessitate *splitting the plate* in two parts before it could be removed. No lubricant is needed in cutting thread with a single point tool in cast iron. In the case of the chuck casting, oil will cause the fine chips to stick in the thread, and will thus do harm rather than good.

If the casting will not screw on the spindle it may be threaded a little larger and tried again. Had the plate been removed from the chuck it would have been difficult to grip it concentrically again. Before removing the plate the hub *H* and face *F* may be machined. When this is done the plate should be removed and screwed on the spindle of *its* lathe, with large face out. This face may now be machined, and the edge or periphery *E* may be turned so as to fit (not too tightly but without shake) the *recess* in the back of the chuck. The plate should next be placed in the recess and marked off with a scriber, and then drilled for a *free* fit of the bolts accompanying the chuck. If the bolt-holes in the chuck are not drilled entirely through, smear the face of the plate with red lead mixed with oil to the consistency of paste, and on pounding the plate into the recess, the holes will be marked.

The Universal Chuck.—A typical universal chuck is shown in Fig. 345. The jaws are operated by a socket-wrench the same as the chuck previously described, but when one screw is turned the other screws are forced to turn with it by mechanism which will now be described. In Fig. 346 is shown a bevel-gear or, as the makers call it, a "circular rack." Engaging with this gear are three pinions (or as many as there are jaws) made integral with the screws which move the jaws, as shown in Fig. 347. The circular rack turns freely in the casing of the chuck, which is divided in two parts, as can be seen in Fig. 345, and held together by bolts. It is obvious that with jaw-screws of the same pitch, all the jaws must move the same distance. It is equally clear from the construction, that the jaws must move simultaneously.

This chuck is made also with modifications which admit of dis-

engaging and reengaging the circular rack and pinions, thus converting it into a *combination* chuck. Fig. 348 shows the combination chuck with

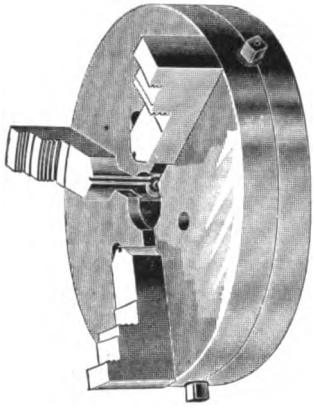

FIG. 345.

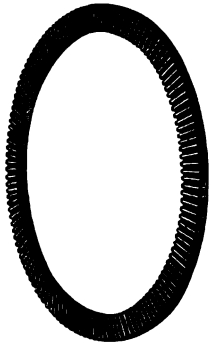

FIG. 346.

back plate removed. It is changed from universal to independent and vice versa, by moving the steel shoes (which are attached to the thumb-nuts) backward or forward around the inclined plane on the loose ring.

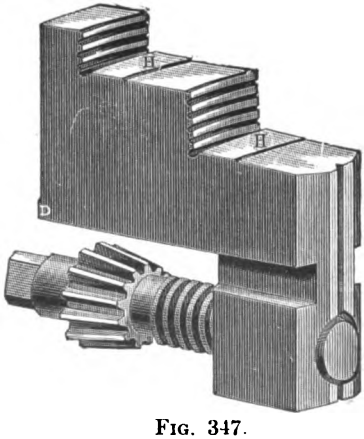

FIG. 347.

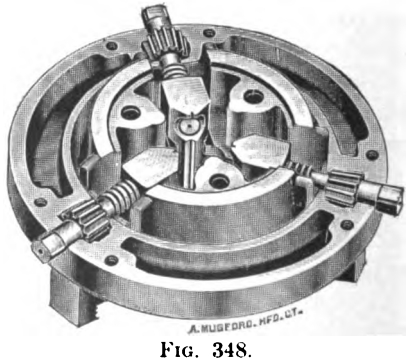

FIG. 348.

Combination Chuck Operated by a Scroll.—The form of gearing known as the scroll is much used in connection with chucks, and it is employed very successfully in the chuck shown in Fig. 349.

The scroll is shown in section at *DD* and in full in Fig. 350. It fits closely in the chuck as shown, being held in place by the threaded collar *E*. The sliding-box *C* has teeth which engage the scroll teeth, so that when the scroll is turned the sliding-boxes move radially. The screws *B* are carried by the sliding-boxes, as are also the jaws *A*, whose

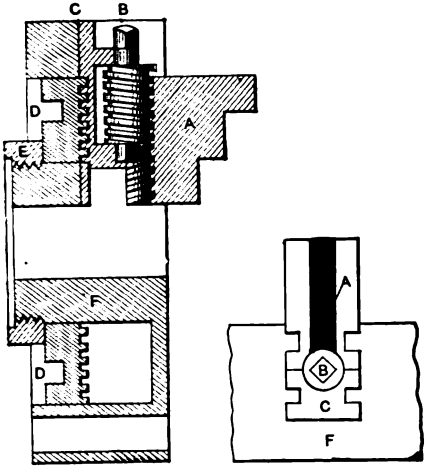

FIG. 349.

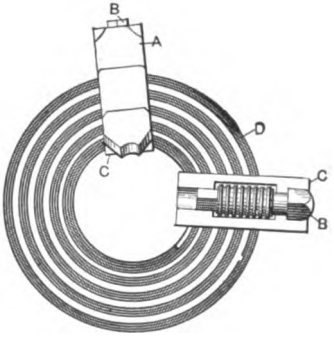

FIG. 350.

threads engage with the threads of the screws. We thus have a *universal* chuck. But the screws may be operated *separately*, and *independently* with respect to the scroll, and this feature makes an *independent* chuck. The combination of these two features, as previously stated, constitutes the combination chuck.

Neither the universal chuck, nor the combination when used as a universal chuck, is reliable, when old, for work requiring a high degree of accuracy. These chucks, nevertheless, are very satisfactory for a large portion of the work for which they are designed.

Chucks with Slipjaws.—For some lines of work a special form of chuck is made with the jaws in two parts. In these chucks the "bites" or slipjaws may be easily removed, and replaced by other slipjaws adapted to grip special shapes. Fig. 351 shows a two-jaw independent chuck of this character. The slipjaws are dovetailed into the main jaws, and are held by pins.

This chuck is made also with one screw having right and left threads, in which case it is a universal chuck.

Valve-chucks.—The chuck illustrated in Fig. 352 is designed especially for valves, faucets, fittings, etc., and a valve is shown between the jaws. One of its faces having been machined, the valve may be turned on its axis 90°, or any angle, without being removed from the chuck. The angle is indicated by an index plate.

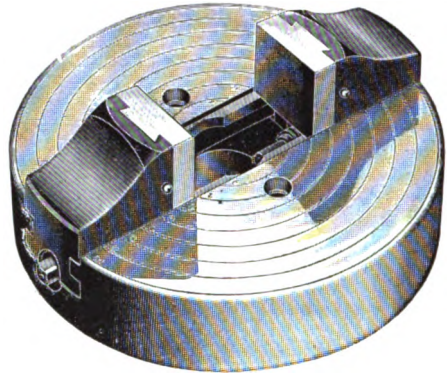

Fig. 351.

Face-plate Jaws.—Large work is sometimes held by chuck-jaws secured to the ordinary face-plate. These jaws are bolted to the large

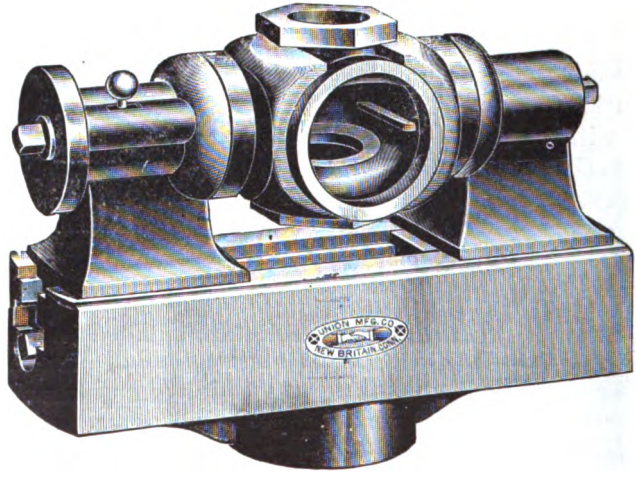

Fig. 352.

face-plate of a lathe, but when not needed they may be detached without removing the plate.

"Home-made" Chucks.—Chuck-making is a specialty, and the chucks described in the preceding pages are sold by factories having special equipment cheaper than they can be made in the ordinary machine-shop. Nevertheless a great variety of simple chucking devices which require no special tools are made in the shops in which they are used. Fig. 353. which was described by H. A. Houghton in "American Machinist," vol. 27, page 83, shows a chuck used for packing rings and other similar work. The main part *A*, which screws on the lathe-spindle, has a number of cylindrical steps to take different diameters. When turning the outside diameter of a ring the latter is held by a clamp and stud, as shown at *B*.

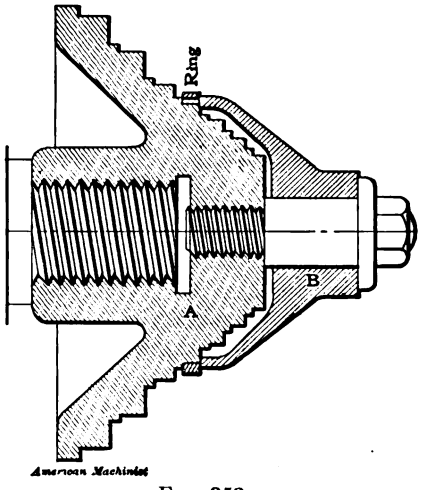

FIG. 353.

Fig. 354 * shows an expansion-chuck. The part *a* screws on the lathe-spindle as in the previous case, and the clamp *c* forces the split bushing against the taper seat.

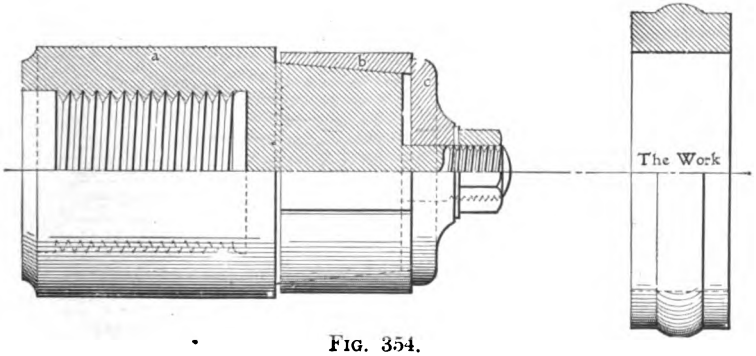

FIG. 354.

Being split the bushing expands, gripping any cylindrical ring or collar which may approximately fit its periphery.

* Cut taken from article by Oral B. French in "American Machinist," vol. 27, page 358.

In some cases, instead of being screwed on the spindle, the small chuck is made to fit an arbor which is held by friction in the spindle-socket. Such chucks, because of the limited friction of the socket, can be used on small work only.

Wood Chucks.—Once when a certain instructor was talking to his class about chucks a *farmer* student had the hardihood to propose the *wood chuck* as a subject for discussion. This led the instructor to expatiate on the advantages of the wood chuck as a mechanical device, and to show how a simple block of wood could be bolted to the face-plate, and bored or turned to receive a frail piece of work which might be sprung out of shape if held in the common chuck. The work should be driven on or in the chuck with a wooden mallet or with a block of wood and hammer.

In gripping light frail pieces in the ordinary chuck it is generally necessary to slacken the jaws after the roughing cuts have been taken in order to allow the work to assume its natural shape before the final cuts are made. After loosening the screws they should be tightened again just enough to take up the lost motion. Otherwise the work may be pulled out of the chuck by the cut.

Testing the Concentricity of Chuck Work.—Rough castings, etc., may be tested by chalk held in the fingers, or by a tool in the tool-post. The

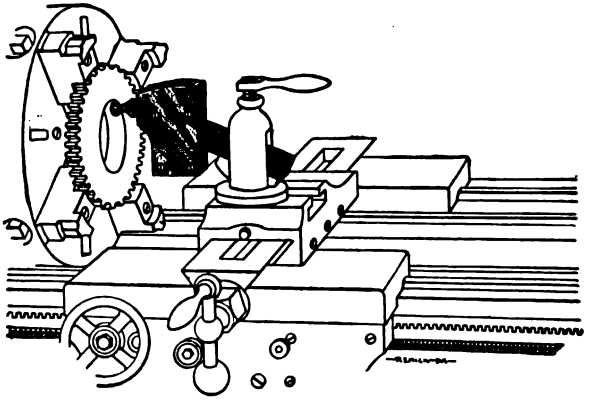

FIG. 355.

point where the chalk or tool touches indicates which chuck jaws are to be moved. Work which has been machined can be more accurately adjusted in connection with an indicator. Fig. 355 shows a gear held in

a chuck and being tested with a Bath indicator. This instrument is so constructed that a movement of .001″ on the testing finger is multiplied to show either $^1/_{12}$″ or $^1/_6$″ movement of the dial finger.

Other chucks and chucking methods are discussed elsewhere in this work.

PUBLIC LIBRARY
THE NEW YORK

CHAPTER XVI

LATHE-ARBORS, OR MANDRELS, AND ARBOR-PRESSES

Definition and Classification of Arbors.—An arbor, or mandrel, is a bar of metal designed to drive work in the lathe by friction of the work

FIG. 356.

on the arbor. Arbors may be classified as follows: First, plain arbor (Fig. 356); second, the self-tightening arbor (Fig. 357); third, expansion-

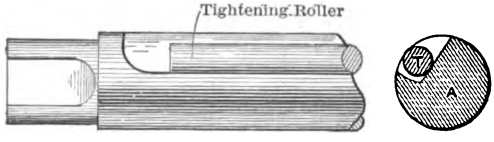

FIG. 357.

arbors (Figs. 358 and 359); fourth, arbor for tapering work (Fig. 360); fifth, nut-arbors (Figs. 361, 362, and 363).

The Plain Arbor is a bar of steel or iron turned slightly tapering with a flat place at each end. Arbors are usually driven in the lathe by a

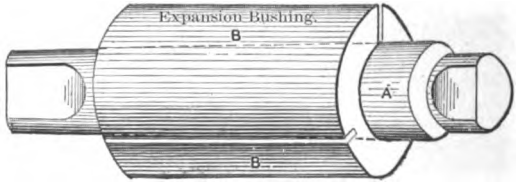

FIG. 358.

lathe-dog, and the flat place on each end is the bearing for the set-screw of the lathe-dog. They are made tapering to compensate for slight

variation of sizes of holes in the work. The amount of taper is generally about .01″ per foot. The best plain arbors are made of tool steel, hardened and ground.

In hardening the arbor it is somewhat distorted, and to compensate for this it must be turned about .02″ larger than the finished size. The remainder of the material is ground off in the universal grinder, and being tapering, the middle of the arbor is the nominal size. Before grinding the arbor the centers should be carefully *lapped.*

The Self-tightening Arbor is made in two parts, the main part being similar to the plain arbor, with the exception that it is parallel in diameter and has a groove cut in one side. Inserted in this groove is a *small*

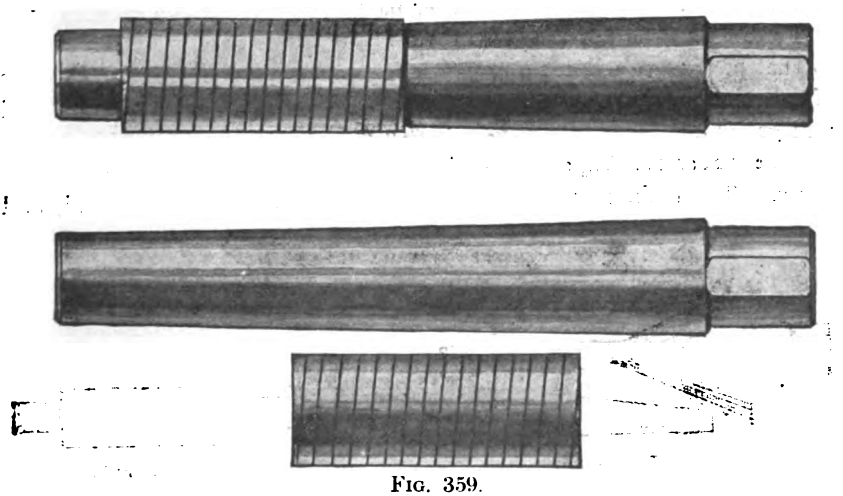

FIG. 359.

roller, marked *T* in the figure. The groove is so shaped, and the roller is of such a diameter, that should the work start to turn on the arbor, the roller would be forced into the space between the work and the arbor, thus forming a kind of wedge to tighten the work on the arbor.

This arbor is open to the objection that the means for tightening the work tends to make the work eccentric. The amount of eccentricity, however, will, if the work fit the arbor fairly snug, be so small as to be of little importance, except in high-grade work. If the self-tightening arbor be used in turning a gear or other detail which is to be held on its shaft by set-screw or key, the *line of contact* of the tightening roller in the bore of the detail *should be marked and the set-screw or key should be located on this line.* The work will thus, when placed upon its shaft, run more nearly true than if turned on the plain arbor. This suggests

the most accurate way of turning a detail held by key or set-screw, viz., turning it on its own shaft with the set-screw or key tightened.

The Expansion-arbor, illustrated in Fig. 358, is made in two parts, *A* and *B*. Part *A* is like the plain arbor, except that the taper is very much greater. The part *B* has a taper corresponding to the taper of *A*, and has three longitudinal slots, two of which are cut nearly through, and the third cut entirely through, the bushing *B*. To use this arbor, part *A* is driven out of *B* and *B* placed in the work. *A* is then driven into *B*, causing *B* to expand and grip the work. *B* is always made parallel on the outside.

In Fig. 359 is shown an expansion-arbor which has recently been placed upon the market. The outer part of this arbor is a *spiral spring* and this spring is bored tapering to fit the inner part, which is similar to that of the preceding paragraph. The outer part or bushing is made of spring steel and the inner part or plug of tool steel, both being hardened and ground.

The Arbor for Tapering Work, shown in Fig. 360, is made in three parts. The main part of the arbor *A* is cone shaped at one end, and

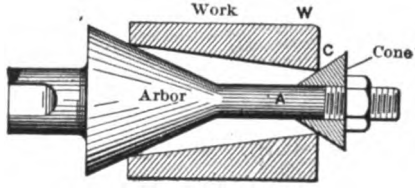

FIG. 360.

FIG. 361.

the other end carries a freely fitting cone which may be adjusted toward the first cone by means of the thread and nut. The work to be turned is placed upon the arbor with the large end of the hole toward the fixed cone; the movable cone is then forced into the small end of the hole, thus gripping the work concentric with the axis of the arbor. In using such an arbor as this on frail work care should be taken to avoid straining the work by forcing the movable cone too tightly into the hole. Work having a taper of say $^3/_4$″ per foot, or less, may be driven by a single tapering arbor made of one piece, without nut and movable cone. The arbor shown in Fig. 360 could be used for work with a parallel hole, but it is not well adapted to such work.

Nut-arbors.—Fig. 361 illustrates the *simplest form of nut-arbor*. It is essentially a plain arbor with thread cut on one end. The nut to be

faced is screwed on the threaded end of the arbor, the whole placed between the lathe-centers and one end of the nut faced off with a common side-tool. The arbor is then taken out of the lathe, the nut reversed, and the other side faced. This form of arbor answers fairly well when the nut fits the arbor tightly, but when it fits freely, as it often does, the base of the nut, which in the rough is not at right angles with its axis, will be forced to coincide with the shoulder on the arbor and thus the nut will be forced "out of true." This form of arbor, while cheap in construction, is unsatisfactory in operation.

A better form is shown in Fig. 362. This arbor carries a loosely fitting washer one end of which is flat and the other end concave. The concave end fits a correspondingly convex shoulder on the arbor. When

FIG. 362.

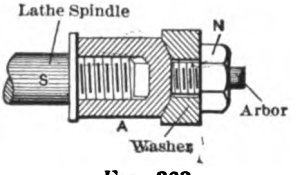

FIG. 363.

the nut is screwed against this washer, the washer revolves around the curved shoulder of the arbor, and thus accommodates any irregularity that there may be in the base of the nut. The axis of the threaded hole is by this means allowed to conform to the axis of the arbor. This is necessary for correct results.

There is one difficulty common to both Figs. 361 and 362, viz., the arbor must be taken from the lathe in order to reverse the nut. This difficulty is obviated in Fig. 363, which shows an arbor so designed that it may be *screwed on the lathe-spindle.* In this case it is only necessary to stop the lathe and unscrew the nut and reverse it without taking the arbor from the lathe. This form of arbor has the additional advantage that it does not require any lathe-dog to drive it.

FIG. 364.

Some mechanics make nut-arbors with slots cut in the threaded end, as shown in Fig. 364. In using this arbor the tail spindle of the lathe

is screwed up somewhat tighter than usual, thus expanding the arbor and tightly gripping the nut. The nut should not be screwed against the shoulder until it has been gripped by the expanding arbor, and then it should barely touch the shoulder. This arbor could be made without the shoulder.

Arbors in Large Work.—It is found that on very large work (say 24" and larger) with a comparatively small hole, the friction between the work and the arbor (not nut arbor) is insufficient to drive the work If such work admits of being clamped directly to the face-plate of the lathe, the arbor may be dispensed with and the work driven by means of bolts securing the work to the face-plate. In the case of a pulley, as illustrated in Fig. 365, the arbor may be used to support the pulley

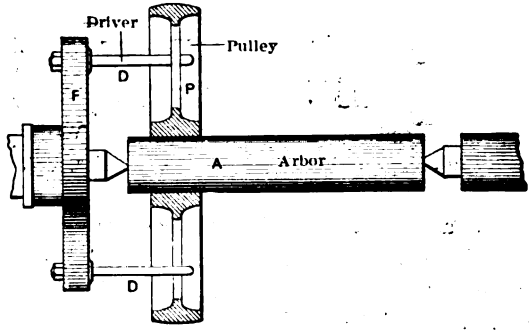

FIG. 365.

and the pulley may be driven by means of two studs secured to the face-plate and engaging with the arms of the pulley. Should the pulley fit near the middle of the arbor rather than on the end, we could use two latne-dogs to drive it. One of these lathe-dogs would be driven by the face-plate of the lathe or a stud projecting from the latter; the tail of the second dog would engage with one of the arms of the pulley. This method is not quite so satisfactory as the first described.

Methods of Forcing Arbors into the Work.—The simplest method of forcing an arbor into the work is by means of a block of hardwood and a hammer. A better method is to dispense with the block of wood and use one of the forms of soft hammers previously described. A still *better method* is to use some form of *arbor-press*. Two different designs of these machines are shown below.

In using a common hammer to force the arbor into the work we should *never strike the arbor directly with the hammer*. Striking the arbor with a

common steel hammer *injures the center* in the arbor and thus causes the arbor to revolve eccentrically. For this reason greater care is taken in making the centers in lathe arbors than in ordinary work. In making the lathe-arbor it is first centered in the usual manner, and then the

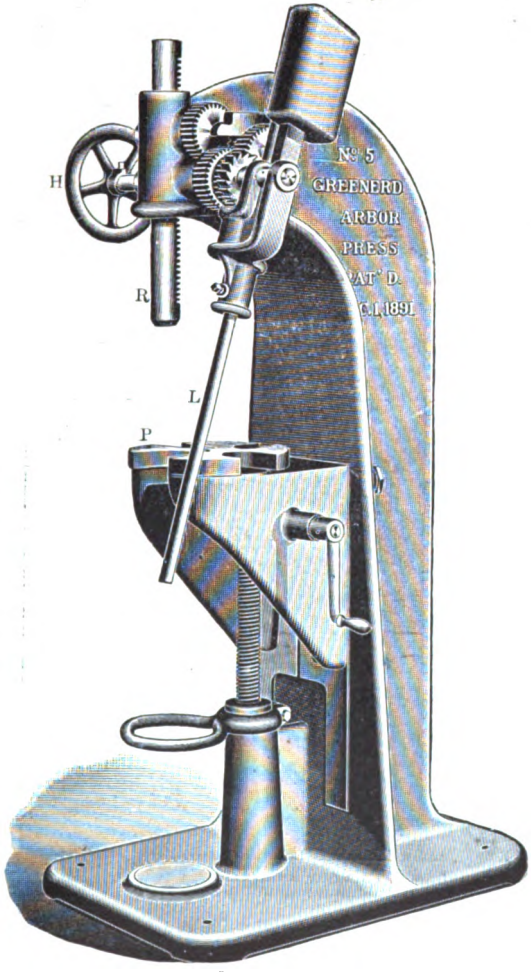

FIG. 366.

countersink of the center is beveled on its outer edge with a countersinking drill of greater angle. This leaves the vital part of the center slightly below the end of the arbor, and thus it is protected to some extent from the abuse of careless workmen.

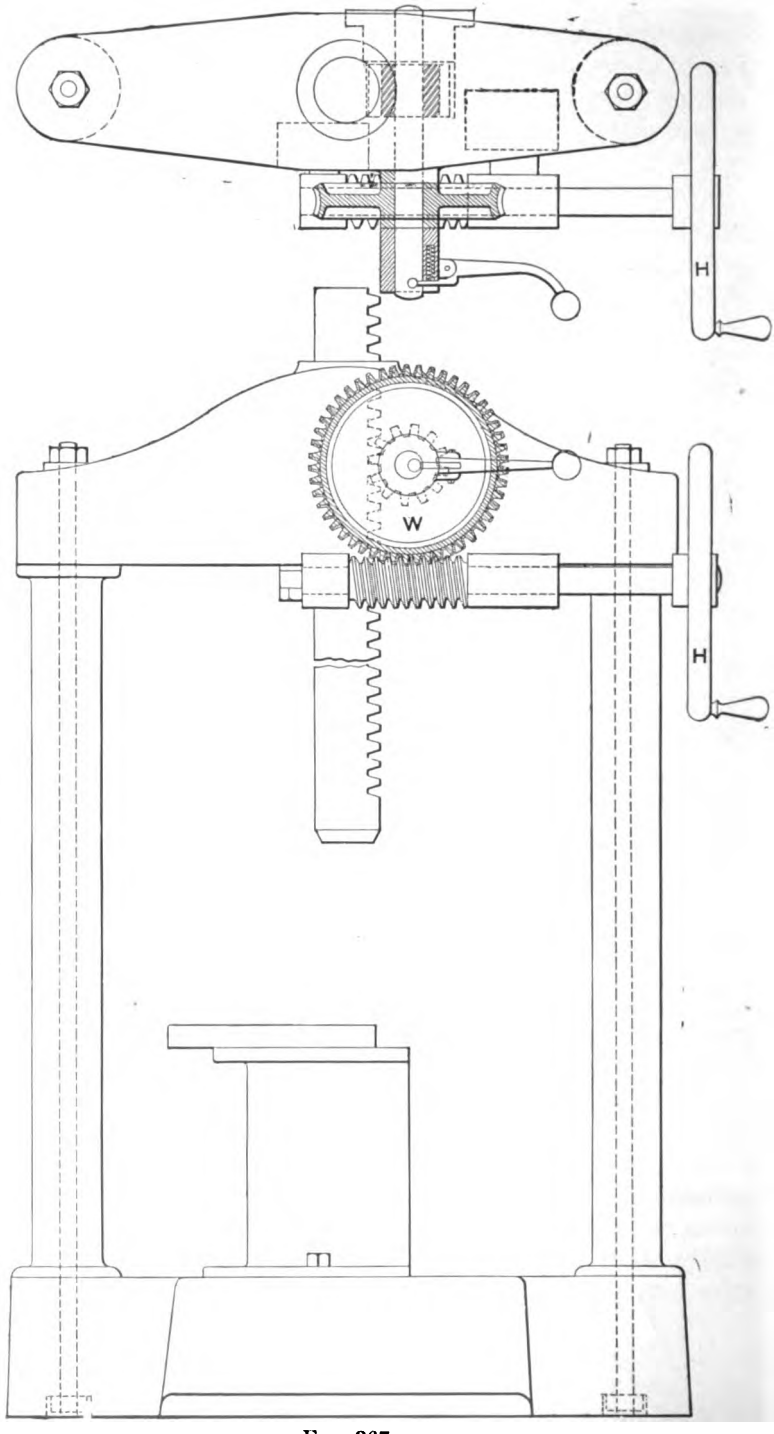

FIG. 367.

The diameter of the countersink in a lathe-arbor should be about twenty-five per cent larger than given for ordinary work in the chapter on Lathe-centers, etc. As stated, the centers should be *lapped*. The instructions given in Chapter X for lapping reamer-centers apply equally well to arbor-centers.

Special Arbors for Large Work.—The arbors previously described are used for work of ordinary size, but when it is necessary to use an arbor for extra-large work we have to make a special arbor. This may be done by shrinking on, or otherwise securing cast-iron rings or collars to a small shaft. The shaft may be of any convenient size to give sufficient rigidity, the extra diameter being provided for by the cast-iron collars.

When a great many pieces are to be machined, it may be desirable to make the arbor of cast iron, with the enlarged part cast on rather than shrunk on. When thus constructed it is well to have steel plugs inserted in the ends of the arbor to receive the work centers. On account of the great weight and friction, oil-holes should be drilled from the outer diameter of the shaft through shaft and plug. This arrangement will facilitate oiling the centers.

Arbor-presses. — In Fig. 366 is shown an arbor-press designed to be operated by hand. In using this machine the work is placed on the plate P, and the arbor is forced into the work by the ram R which is operated by the lever L. The connection between the lever and the ram is made by means of a train of spur-gears, the last of which engages the rack teeth on the ram. The lever has a ratchet connection with its shaft, which with the hand-wheel H admits of *quick return* of the ram. Both ram and lever are counterweighted. These machines are made in smaller sizes also, some of which are designed to be secured to the bed of the lathe.

The arbor-press illustrated in Fig. 367 was designed in connection with a class in machine design at the Michigan Agricultural College. The operation of the machine by means of the hand-wheel H, worm-wheel W, and rack and pinion will be understood from the cut.

CHAPTER XVII

SOME EXAMPLES OF ENGINE-LATHE WORK

Character of the First Two Examples.—This chapter contains detailed instructions for a few examples in lathe work, the exercises chosen being such as involve principles admitting of general application. The first two examples are a plain cylinder or shaft, and a collar, both of which are to be finished all over and polished. The collar is to be finished to dimensions in connection with standard gages; but, supposing the work to form the basis for actual exercises in a college shop, it might be well to use common calipers in fitting the shaft to the collar. The exercises would then give practice in both methods of accurate measurement. The shaft is supposed to be machine steel, and it is to be finished to $1\frac{1}{2}''$ diameter by 6″ long. The collar is cast iron, the finished dimensions being 3″ diameter by $1\frac{3}{4}''$ long, and it is to be a tight fit on the shaft. Both details have the usual stock allowances for finish.

Machining the Collar.—(1) Grip the collar in the *independent* chuck so that its outer face shall project beyond the chuck jaws as in Fig. 368. This gives clearance for the facing-tools. The boring-tools must clear the spindle and chuck-plate on the rear end of the collar.

(2) Rough-face the collar with a roughing-tool, as shown at *J* in same figure, or with the diamond-point tool *D* in Fig. 369. Slightly *chamfer* the corner at *C*, to protect the finishing-tool from the foundry scale.

(3) Bore the collar with a boring-tool as shown, to within *about* .008″ of final diameter. Do not waste time by boring to any exact dimension, as the reamer is designed for this purpose. Some use two sizes of reamers, to avoid boring even to the approximate dimensions indicated.

(4) Ream to size with a fluted or rose reamer, using no lubricant.

(5) Test with plug-gage or caliper-gage. If the gage cannot be pushed through with the forefinger, run the lathe at a high speed and smooth the bore with emery-paper wrapped around a stick, as shown

in Fig. 369, or held in the fingers. In using the emery-paper it will require care to avoid enlarging the hole at each end. If the hole is found to be smaller at the *back* end apply the emery most at that end. If the gage will not pass through the bore after a few minutes' application of the emery-cloth, the reamer should be enlarged. Or, if available, an *expanding* reamer would be advantageous for use in following the previous reamer when the latter is worn below size.

If no reamers are to be used, regrind and oil-stone the boring-tool and finish to final size, taking care to feed the carriage *back and forth*

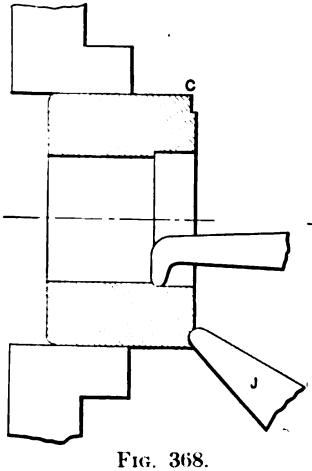

FIG. 368.

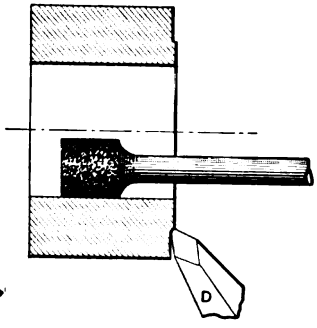

FIG. 369.

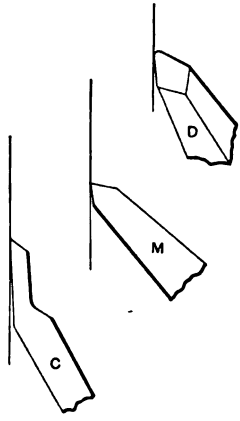

FIG. 370.

to compensate for the spring of the tool; or, finish with a second boring-tool kept for finishing cuts, which tool may have a somewhat broader cutting-edge. Test with gage as before.

(6) Finish the outer face of the collar with a bent side-tool as at *C*, Fig. 370, or with a diamond-point as at *D*, or with a diamond-point tool as at *M*. The advancing corner of the tool should be *slightly rounded* with the oil-stone. By giving either of these tools *small* contact with the work, and running the lathe from 50 to 100 per cent faster than for the roughing cuts, a surface may be made which will require only the final polishing with emery-cloth. But some workmen never learn how to grind and oil-stone, and set the tool so as to get this nice *scraping* effect without chattering.* These men prefer to run the lathe but

* The chattering may sometimes be overcome by careful adjustment (*a*) of the spindle end-thrust, (*b*) of the spindle bearings, (*c*) of the cross slide-gibs, (*d*) of

little faster for the finishing cut than for roughing cuts, and to use a file or scraper for smoothing. To get the best results in finishing cuts, corner *E*, Fig. 370, should clear about .001″ while the point of the tool is cutting.

(7) Having smoothed the face of the collar, it may next be polished with oil and, say, Nos. $^1/_2$ and 00 emery-cloth, the 00 being used last. Run at highest speed and, with emery-cloth wrapped around a flat stick or around a file, move it slowly back and forth over the face of the work; or, hold the cloth between the end of stick and work, the stick being fulcrumed over a tool in tool-post.

Some would prefer to do this polishing after all the turning is completed, which is all right if the face of the collar overhangs the end of the arbor or a shoulder on same. Otherwise it is difficult to polish the whole face equally without *wearing the arbor* with emery.

(8) Place the collar on an expansion arbor * so that its rough end shall overhang the right end of the arbor bushing about $^1/_4$″. Rough-turn the periphery, using a right-hand diamond-point tool, as at *A* in Fig. 371, or a roughing-tool, and leaving about .01″ for the finishing cut.

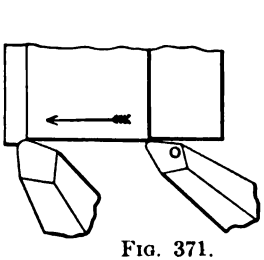

Fig. 371.

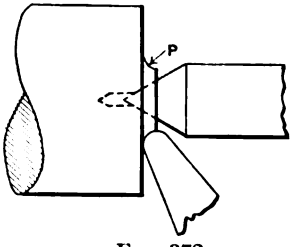

Fig. 372.

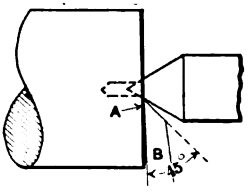

Fig. 373.

(9) Rough-face the right end of the collar with same tools used in operation No. 2, leaving not more than .01″ for the finishing or smoothing cut.

---

the carriage-gibs. In other cases the tool contact must be reduced or its clearance and rake lessened. Merely changing the direction of the feed may sometimes stop the chattering. When turning work on centers, a bit of leather or waste between the tail of the dog and the driver may cause the trouble to cease. The causes of chattering are referred to in other connections in this work.

* If the solid or plain arbor be used the work will generally fit near the middle, necessitating special care to avoid injuring the arbor with the tools and emery, and leaving the edge of the bore in such shape as to require the use of file and emery-paper by hand after removing the collar. The plain arbor is, nevertheless, often used for such work.

(10) Smooth-face this end according to instructions for operation No. 6, except that a straight side-tool may be used if preferred. If the end is to be filed or scraped, allow as for filing, etc., in next numbered paragraph; but if emery-cloth only is to be used, an allowance of not more than .001″ should be made.

(11) Smooth-turn the periphery with a square-nose tool, or with a left diamond-point tool set as at *O* in Fig. 371, and having its point slightly rounded. The part 0 of this tool should *just clear* the work while the tool is fed in the direction of the arrow. The periphery of the collar is very likely to need filing, and for the file and emery-cloth an allowance of from .001″ to .005″ should be left after the finishing cut.* The beginner is here cautioned against leaving too much work for the file, as filing tends to destroy the truth of cylindrical surfaces.

(12) File periphery, and face also if necessary, leaving about .0005″ for polishing. Polish periphery and right end according to previous instructions, testing diameter and length by standard gages. Work of this character is not to have round corners unless so shown on drawing or specified, but it is a sign of poor workmanship when the corners are left so sharp as to *cut the hand.* Dull the corners with emery-cloth and remove the collar from the arbor.

Machining the Shaft. — (1) Saw from a $1^9/_{16}$″ or $1^5/_8$″ bar of machine steel, a piece $6^1/_{16}$″ to $6^1/_8$″ long, and center according to instructions in Chapter XIV.

(2) The next operation is to face the ends. If there is as much as $^1/_{16}$″ to cut off, face off all but about .01″ with the roughing-tool, which will leave the end as shown in Fig. 372. Cut off the projection *P* with a side-tool, moving the latter parallel with the axis of the shaft and at the same time feeding in. Next run the lathe faster and take one or two light smoothing cuts. For this purpose, as well as for cutting away the projection left by the roughing-tool, the side-tool should have its point about 45° angle, as in Fig. 373, and it should be set so as to touch at *A* and *barely clear* at *B*. In this work the tool should be fed at right angles to the shaft-axis. Next, change the lathe-dog and finish the other end in the same manner. Measurement with the steel rule is in most cases sufficiently accurate for shaft *lengths*.

---

* Most mechanics make these small allowances by merely setting the calipers "a trifle" larger; but the tendency is toward more systematic methods. Micrometer or Vernier calipers may be used, either for direct measurement or for setting the common calipers. In some such cases limit-gages would be advantageous.

A **half-center** (special center flattened near the point) gives ample clearance for a side-tool having a stronger point than that shown in Fig. 373.

(3) As a general rule a shaft or other detail which is to be machined should be roughed out *all over* to approximately the final dimensions before any part (ends excepted) is finished. In the case of a shaft this gives both centers time to *wear to a bearing*, and they are not likely to change afterward; but if the shaft be finished half-way and then reversed eccentricity will probably result. Another reason for roughing out the work is that there are initial stresses in the outer fibers of the metal. When these stresses are removed by cutting away the metal the detail usually changes its shape. In heavy stocky details the change is sometimes inappreciable, and is therefore often neglected; but in pieces of which the diameter or thickness is small as compared with the length, changes are expected.

With the above in view turn the shaft about half its length to within .02″ to .03″ of final diameter, using the same tools as used for the roughing cut on the collar. Change the lathe-dog and turn the opposite end in a similar manner.

(4) The finishing cuts may now be taken. With the point of the diamond-point tool slightly rounded and the tool set as at 0 in Fig. 371, turn the shaft to within .01″ of final size. With another tool of same shape reserved for finishing cuts on steel, or with the same tool nicely oil-stoned, take the final cut, leaving about .0015″ for file and emery-cloth. Reverse and finish opposite end. The last cuts should be taken with finer feed * and higher speed than the preceding cuts.

Common calipers are to be used according to instructions in Chapter I for fitting the shaft. Most workmen would fit one end for a short distance and use this as a guide for filing and polishing the remainder of the shaft.

(5) File and polish the whole length of the shaft, using the arbor-press or a soft hammer in testing its fit in the collar. The shaft must not be forced in too tightly, and it should be oiled to prevent "seizing."

Examples of Taper-turning, etc.—The uses of the ordinary facing-, turning-, and boring-tools which have been considered somewhat in detail in connection with the two examples of work just given, will be referred

* For instruction on cutting speeds and rates of feeding the reader is referred to Chapter XI. As to the number of cuts required, it is difficult to give a rule. With the ordinary stock allowance, one or two roughing cuts will generally be sufficient in boring a cored hole. It may require as many or more finishing cuts. With same stock allowance, the workman should aim to make one roughing and one or two finishing cuts answer for peripheral turning and for facing.

to more briefly in the remainder of this chapter. The next example is the bevel-gear blank shown in Fig. 374, and the operations are as follows:

(1) Measure blank to ascertain if there is sufficient stock and how it is distributed. Chuck as shown in Fig. 375 and finish* at *F*.

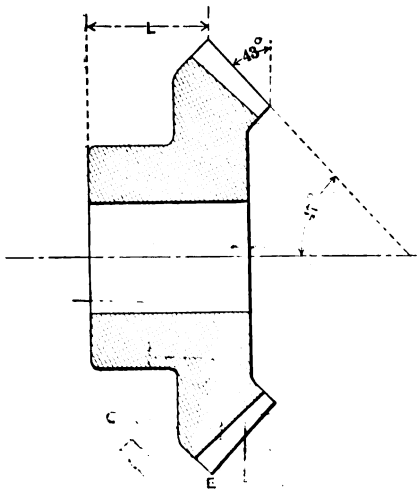

Fig. 374.

(2) Work in which a small hole is wanted is often left solid by the moulder. In a case like the one in hand the first thing toward making the hole is to cut a center for the drill. For this purpose we do not use a center-punch, but a centering-tool like that shown in Fig. 376. The cutting-end of this tool is exactly like a *flat* drill, but the shank is that of a common lathe tool, and it is held in the tool-post in the same manner. This tool is adjusted in the tool-post as nearly in line with the center as may be done by the eye, and then moved against the revolving work by the hand-feed handle of the lathe-carriage. If it makes a circle larger in diameter than its extreme point, it must be readjusted to strike the center of this circle, and then pressed against the work until it cuts a conical hole the largest diameter of which may be about $^3/_8''$ to $^5/_8''$, provided the required bore is larger, as it is in this gear. If the tool cuts eccentrically, the carriage and cross-slide gibs should be looked after and tightened if loose, and the tool should be fed outward so as to cut on one side until the eccentricity is corrected.

(3) The hole should next be drilled. A twist-drill $^1/_{16}''$ to $^1/_8''$ smaller than the final bore, and held in the holder shown in Fig. 188, or in the tail-spindle socket, or in a holder made to clamp on the end of the tail-spindle, may be used. Only small drills should be held in the tail-spindle socket, as the slipping of the larger drills would injure the socket and disturb the fit of the lathe-center. When the common holder is used, it requires care to keep the drill from drawing in and

* The word finish, used in a general sense, includes both rough and smooth cuts.

leaving the tail-center, especially when the point of the drill is emerging through the bottom of the hole. For safeguards against this trouble see Chapter IX.

(4) Enlarge the hole with boring-tool to within a few thousandths of an inch of the final diameter and then finish with a fluted or rose

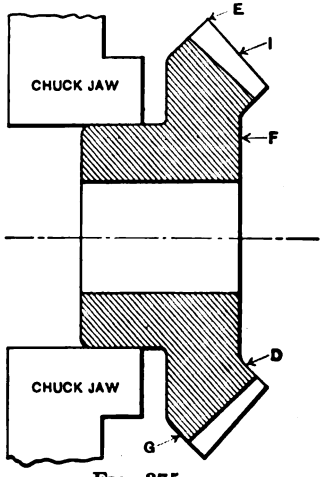

FIG. 375.

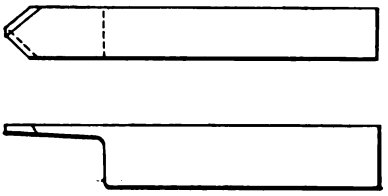

FIG. 376.

reamer; or, bore somewhat smaller and use a rose reamer, followed by a fluted reamer. Test, and if too small follow instructions given for a similar case near the beginning of this chapter.

(5) Place on arbor and turn largest diameter to size. This will leave a cylindrical surface upon which to mark a line for the edge *E*.* Establish this line with respect to the face *F*. The exact position of this face is generally not very important.

(6) Turn face *I* to the required angle, starting at the above edge line and using the compound rest *R* 1, a cut of which is shown in Fig. 232. Use a gage if the lathe has no compound rest. In using the compound rest, the workman is apt to make a mistake if the angle on the drawing is not given the same way that the compound rest is graduated. Thus the compound rest is at zero when set to cut parallel with the cross-feed. The angles on beveled work should be given from the same starting-point, but if given from the axis, as in Fig. 374, the compound

* The position of this edge should be given on the drawing. See article by the author in "American Machinist," vol. 27, page 967.

rest must be set to the complement of the angle given. The complement of the angle is the angle itself subtracted from 90°. If, for instance, the angle with axis be 47°, as it is in this case, the rest should be set to $90° - 47° = 43°$.

(7) Turn surface *G*, starting from the edge line, and then turn *D* to give face *H* the proper length.

(8) Finish hub end and back face, and then finish hub diameter. The horizontal distance between end of hub and edge line *E* must usually be quite accurate.

If required to turn the bevel-gear in a lathe having plain rest only, a gage could be used as shown in Fig. 377; and after rough-turning the

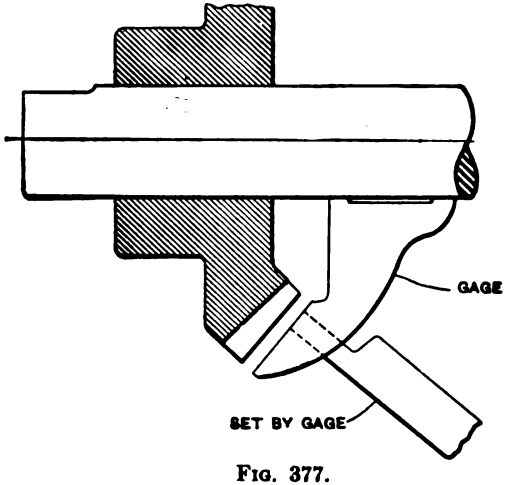

FIG. 377.

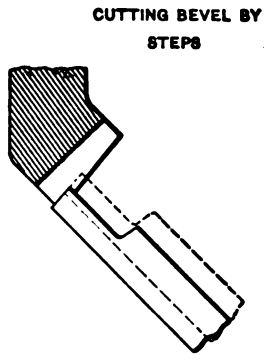

FIG. 378.

face, it could be finished with a side-tool, or in steps with square-nose tool as in Fig. 378. Either of these tools could be set by the gage. In using the square-nose tool the width of each step should be about three fourths the width of the tool-edge. In this way the depth of each step will be indicated by the preceding cut. The steps should be started at the large diameter. The face may be smoothed with a file.

The lathe-center, which is 60° included angle, is often turned by the above method. When turning the center by compound-rest method, the rest should be turned to the left 60°. Thus the angle with axis is half of $60° = 30°$ and $90° - 30° = 60°$.

Turning and Knurling a Center-punch.—To make a center-punch like Fig. 379 in an engine-lathe, the following order of operations may be observed:

(1) Saw off a piece of $^5/_8$″ round tool steel $5^3/_8$″ long.

(2) Center, face ends and turn body to $^9/_{16}$″ diameter. It need not be particularly smooth.

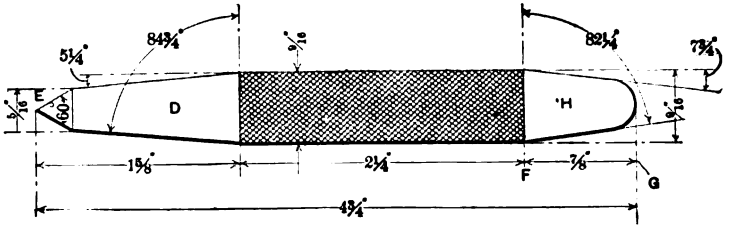

FIG. 379.

(3) Fig. 380 shows a knurling-tool. With this tool in tool-post and pressed tightly against stock, both knurls being in contact with latter,

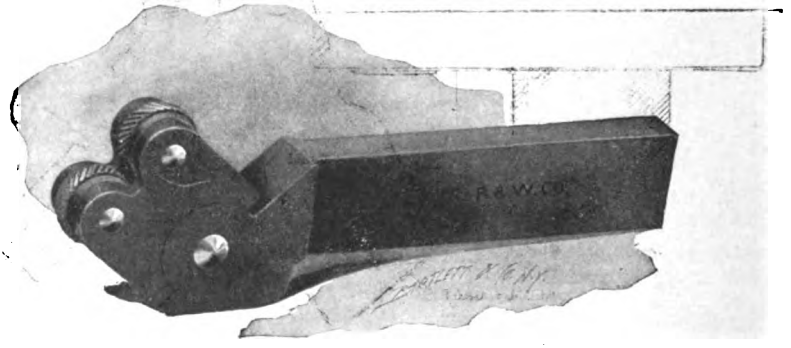

FIG. 380

feed the lathe-carriage lengthwise by power. Let the knurler traverse the work as many times as may be necessary to make it appear like Fig. 381. The knurled surface may extend about $^3/_8$″ longer than the drawing, the extra length being cut away in succeeding operations.

(4) Using a lathe having a compound rest, chuck stock, allowing about $2^3/_8$″ to project, and using a brass sleeve to protect knurling. A draw-in chuck like that shown in Figs. 243 and 244 would be best for this work.

(5) With side-tool face off end until drilled center disappears.

(6) Turn *D*, adjusting compound rest to cut angle given on drawing.

(7) Readjust rest and turn point *E*, which is of the same angle as the lathe-center previously referred to.

(8) Finish with file and polish with emery-cloth and oil.

(9) Mark off points *F* and *G* and chuck, allowing end *H* to project about $1^3/_4$" and using brass sleeve as before. Face off end to mark *G*.

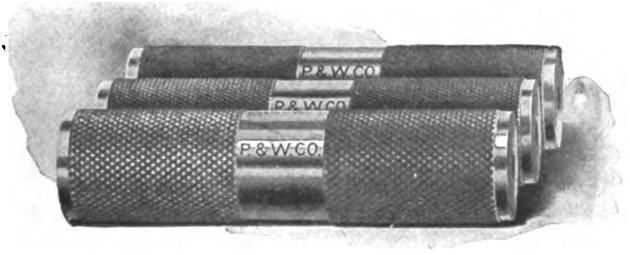

FIG. 381.

(10) With compound rest properly adjusted, turn *H* to angle of drawing.

(11) Crown the end approximately with roughing-tool, finishing with scraper or special curved tool. File and polish as in previous case.

(12) Temper both ends about the same as for cold-chisels.

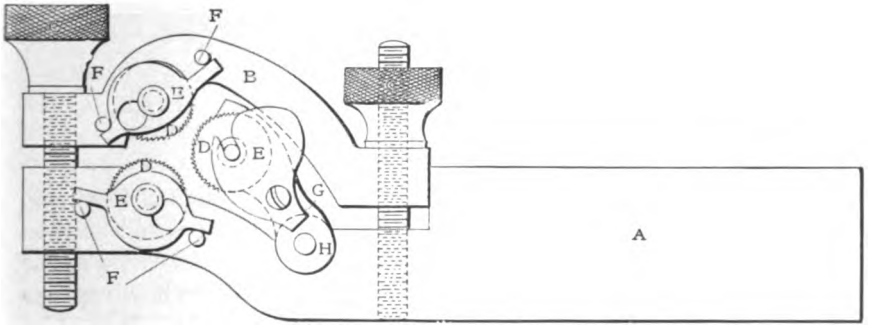

FIG. 382.

Fig. 382 shows a knurling-tool specially adapted to frail work. This tool was illustrated by the cut here used in "American Machinist," vol. 26, page 1257.

Turning Tapers by Taper Attachment and by Tail-stock Adjustment. —The short, abrupt tapers, to which the compound-rest method is adapted, are generally designated in degrees, but when acute angles are referred to in the machine-shop, they are ordinarily designated

by the amount of taper *in diameter* per foot. These tapers may be made either by setting the tail-stock over or by using the taper attachment. The latter is the better way, but many lathes lack the attachment. The tail-stock method will be described first. Thus, suppose we require a piece like Fig. 383. It will be seen that the taper part

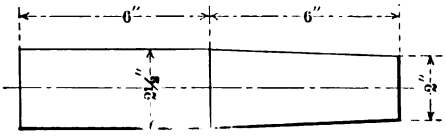

FIG. 383.

has a taper of 1″ per foot. This would seem to necessitate setting the tail-stock over just a half inch. This is a close approximation, but on account of the peculiar contact between the work-centers and the lathe-centers, and because the distance between centers is changed slightly when the tail-stock is set over, it is not exact. Assuming, however, that the tail-stock had been adjusted correctly for the above case, still it would not be right for a shaft 2 feet long having a similar taper end. This is clearly shown in the diagram of Fig. 384, which

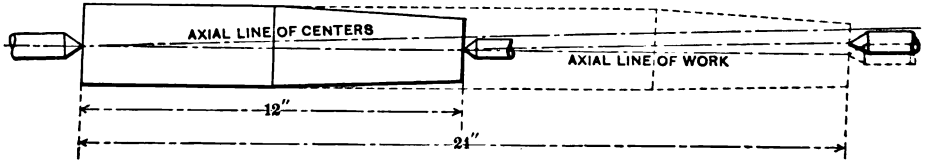

FIG. 384

represents the tail-stock as moved back to take in a shaft 2 feet long. It will be seen that it has left the axis of the shaft and would need to be set over to the dotted position of the center, or about twice as far as for a shaft 1 foot long. From the above considerations it will appear that for a given taper per foot the distance that the tail-stock must be set over varies with the length of the shaft.

The Taper Attachment is shown bolted to the rear of a lathe-bed in Fig. 236. In using this attachment its guide-bar *G* is swiveled on a central pin an amount proportional to the taper, regardless of the length of the shaft. The graduations at the end of the plate upon which the guide swivels indicate the taper. The taper attachment is so constructed that when adjusted to any required taper and connected to the cross-slide it causes the latter to feed in or out, at the taper to

which the attachment is set, without interfering with the carriage-travel and crosswise adjustment of tool. This method of making tapers is simpler than the tail-stock method, but there are some practical difficulties in its operations, due to necessary freedom of movement in the machine-slides, etc. To get the best results the cut should be started about $^1/_2$" *beyond the end of the work.* The carriage will thus travel a short distance before the tool begins to cut, and in so doing the lost motion due to the freedom of movement above mentioned will be taken up. If we neglect this precaution the tool is very likely to cut irregularly a short distance. If the diameter of the work is much smaller than the lathe-center, the clearance may be given by starting the feed with the tool clearing the center and feeding it in as it approaches the work.

Errors in Taper-attachment Graduations.—In this connection it may be proper to call attention to an error in the graduation of taper attachments. Tapers are measured at right angles to their axes. The graduations of the taper attachments, however, are made on the arc of a circle concentric with the pin upon which the guide swivels. These graduations should be such as would be projected from equal divisions of a line drawn tangent to the graduated arc and perpendicular to the axis of the lathe. This would make the subdivisions on the graduated arc closer together for the greater tapers than for the smaller tapers. But in most taper attachments the graduated arc is laid out in equal divisions. This introduces an error which is scarcely noticeable in small tapers, but which is quite appreciable on the greatest tapers for which these attachments are designed. However, it is usually more important to have the inner part of the work fit the outer part than to have the exact taper per foot.

For a more comprehensive treatment of taper-attachment graduations the reader is referred to "Machinery," page 238, January, 1904.

Taper attachments are usually designed to turn tapers not greater than 4" per foot. The maximum length of the taper is about 24" to one adjustment of the attachment.

Fitting a Taper-shaft to a Collar.—Before giving instructions for this work the attention of the student should be called to some further precautions necessary in taper-turning. In any work turned on the lathe-centers, the work-centers are more likely to wear concentrically if the ends are faced square with the axis. On account of the abnormal contact of the centers this is of special importance in turning taper work with the tail-stock set over. When making tapers with the taper attach-

ment the tail-stock is kept in its normal position, and the centers are not more likely to wear out of true than when turning straight work. In either of these methods of taper-turning it is necessary that the two lathe-centers be of the same height, otherwise the sides of the taper will not be straight lines. The point of the tool should be set to the same height as the point of the center.

As stated in Chapter XV, the workman should turn the lathe through one revolution and be sure that the tail of the dog clears the sides and bottom of the slot in the face-plate. The tail of the dog should be oiled, as should also the points of both centers.

In fitting a taper-shaft to its enveloping element, which for convenience we shall call a collar, the collar is usually finished first. Therefore chuck and bore the collar, using either the compound rest or the taper attachment for roughing it out. If the lathe has no taper attachment, the compound rest may be used when the depth of the hole is not greater than 3 to 4 inches. The angle corresponding to any given taper per foot may be computed, or the rest may be adjusted by a gage, or it may be set by the cut-and-try method. For further instructions on making taper-holes see Chapter X.

To taper the shaft by setting the tail-stock over, the latter may be adjusted approximately in accordance with the principles already outlined. To make the *slight correction* necessary, proceed as follows: with the square-nose tool turn a place at each end of the taper about $^3/_{16}''$ wide and about $^1/_{32}''$ larger than the final diameter. Feed the square-nose tool outward about an inch, and then feed it toward the work again until a 6″ scale will just enter between the point of the tool and the last turned place. Move the carriage to bring the tool in line with the first turned place and test in a similar manner. If not correctly alined, readjust the tail-stock and proceed in the same manner until the 6″ scale will fit equally well between the point of the tool and the work at the two grooves. The shaft may be next turned to the diameter of these grooves and tried in the collar. If it shakes perceptibly, readjust the tail-stock and take another cut. The next time it is tried it should very nearly fit, and before placing the collar on the shaft this time, the shaft should be given three marks with chalk (Prussian blue would be better) the full length of the taper, and about equally divided around the periphery. By moving the collar around on the shaft its contact will be indicated by the rubbing off of the chalk. The shaft should be rotated in the lathe and filed where the chalk is rubbed off until the bearing is satisfactory.

It should be unnecessary to give any further instructions respecting the use of the taper attachment. The method of testing the fit of the work may be exactly the same as when turning tapers by setting over the tail-stock. It may be well to explain that the provision for adjustment of the tail-stock will not admit of turning a taper of as great a degree of angularity as may be turned with the taper attachment.

The Steady Rest, Cathead, etc.—The steady rest is shown at *R* 2 in Fig. 214. This device is used for supporting a slender shaft near the middle to prevent the shaft from springing away from the cutting-tool. It is also used to support a shaft at the end when it is necessary to perform some operation on the end of the shaft that cannot be done with the tail-stock in position. In the latter case the tail-stock is moved to the right, and while the work is supported on one end by the steady rest, the other end is held either by the chuck, or by a strap which holds the work in contact with the lathe-center. Fig. 385, which is taken from "Machin-

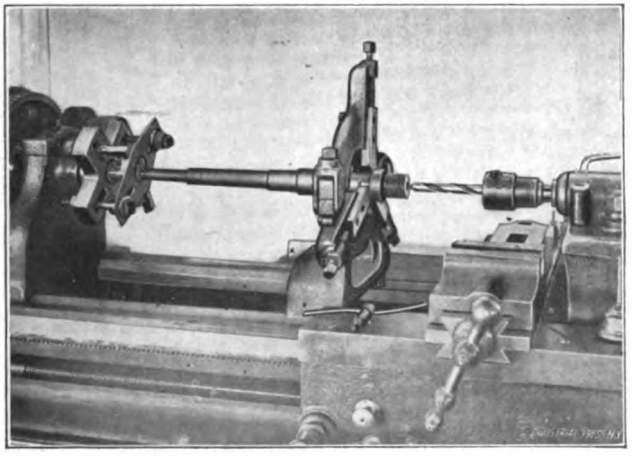

Fig. 385.

ery," shows a lathe-spindle supported as last described. In this case the spindle is driven by the lathe-dog in the usual manner, and it is held to the center by bolts and a strap called a "hold-back," the pressure of which is sustained by the dog.

Whether the steady rest be placed at the end of the work or near the middle, there must be a true bearing on the shaft where it revolves in the rest. If the shaft is not too slender, the bearing near the middle may be turned on the centers in the usual manner by taking very light

cuts. It is generally better, however, to use a *cathead.* The latter is a kind of cylindrical shell having a truly turned bearing designed to run in the steady rest. It is held on the shaft by three or four set-screws at each end of the shell. Fig. 386 shows a cathead held on a shaft as indi-

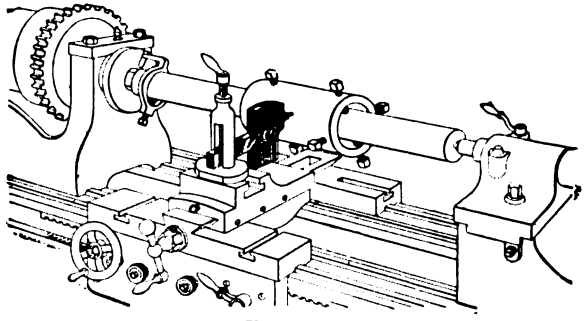

FIG. 386.

cated. The cathead is adjusted by the set-screws until it runs "true," on the same principle that work is adjusted in a chuck. The illustration shows the Bath indicator as used for this purpose. In the absence of such an instrument, the cathead may be adjusted in connection with a common lathe tool held in the tool-post. The lathe could be turned backwards to avoid having the cathead cut by the tool. Or, better still, a piece of hardwood could be shaped to take the place of the tool.

Some prefer to set the cathead by giving it a light coat of red lead and marking the revolving head by a pencil held in the hand. Special care is required in adjusting the steady rest, either with or without the cathead, as it is very easy, by screwing one of the lugs up too far, to deflect the work. It is usually best to adjust the lugs while the work is revolving.

Turning a Cathead.—The cathead should be made quite strong, otherwise it will be sprung out of shape while it is being adjusted on the shaft. It should also be *turned* very carefully. For this purpose it may be placed on a stout arbor and adjusted by set-screws. After taking a roughing cut, the pressure of the set-screws should be relieved before the finishing cut is taken. The cathead need not be finished on the inside.

The Follower-rest.—In some cases the work is so frail that it is necessary to support the pressure of the cut by a device bolted to the carriage. This device, which is shown in Fig. 387, is placed nearly opposite the tool and travels with it. In using the follower-rest the

shaft is first turned a few inches at the end to give a true bearing for the rest. The rest is next placed in position and its lugs adjusted in contact with the shaft, when the cut may be continued. Sometimes the shaft is turned to the finished size at the end and two tools are used

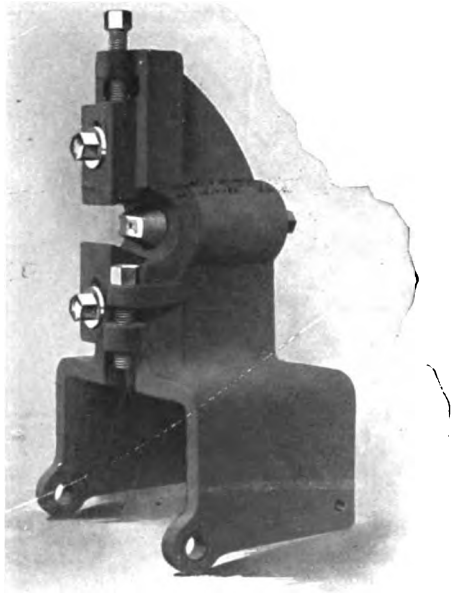

FIG. 387.

FIG. 388.

in advance of the follower-rest, the forward being a roughing-tool and the rear one a finishing-tool. With this arrangement one traverse of the tools finishes the shaft.

The follower-rest is often made in a form which requires a *bushing* for each size of shaft. Fig. 388 shows the Reed follower-rest, which is so designed that either bushings or adjustable lugs may be used. The illustration shows a bushing secured to the rest.

Machining a Small Cast-iron Crank.—For machining a cast-iron crank of the dimensions given in Figs. 389 and 390, the crank might be cast with flanges as in Fig. 391, and the machine operations could be as follows:

(1) Center at *A* and *B* and face ends to length.

(2) Turn the four disks to $2^1/_4''$.

(3) Draw a line on flanges with key-seat rule as in Fig. 392.

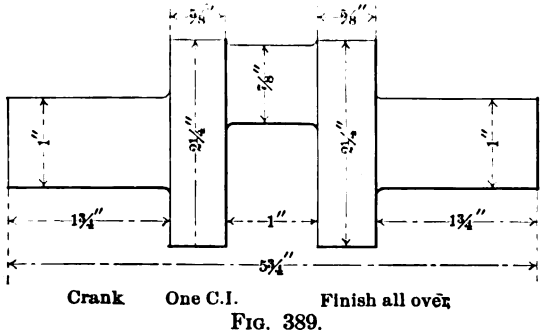

FIG. 389.

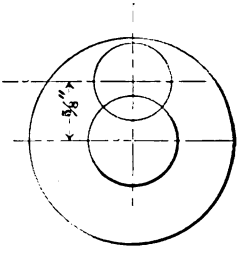

FIG. 390.

(4) Draw radial lines joining latter line with centers A and B.

(5) With hermaphrodite set to $^1/_2''$, draw arcs intersecting the radial lines as at C, Fig. 392.

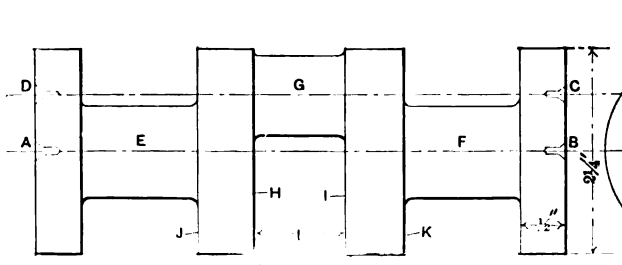

FIG. 391.

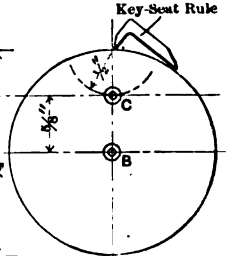

FIG. 392.

(6) Drill and ream centers C and D, taking care to keep the centers from "running."

(7) Next rough out crank at E, F, J, K, to within $^1/_{32}''$ of size.

(8) Turn to final dimensions and polish at G, H, I.

(9) Turn the two end disks to diameter of E.

(10) Finish and polish at E, F, J, K.

Precaution.—While turning E and F the crank should be supported at L by a small rod or by a screw with nut on end. The rod or screw must not be forced but *pressed in lightly with the fingers* to avoid springing the casting. When running the lathe fast for work of this character a weight (of any kind) should be bolted to the face-plate of the lathe to counterbalance the work.

Machining a Paper-weight.—Fig. 393 shows a paper-weight the base of which is brass and the stem steel. Figs. 394 and 395 show

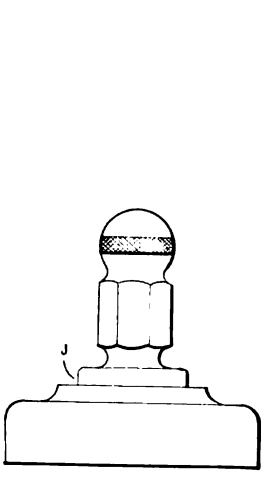

FIG. 393.

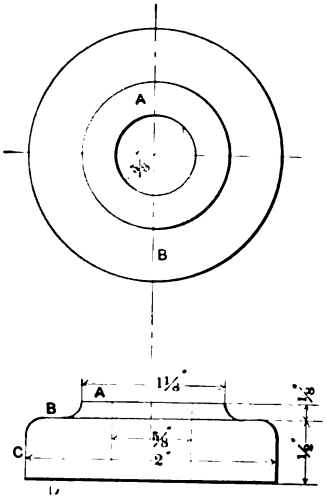

FIG. 394.

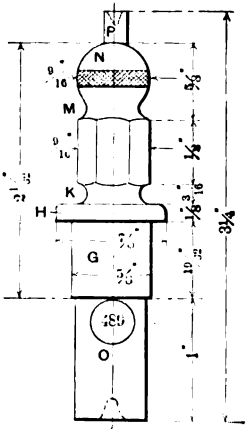

FIG. 395.

the two parts in detail. To make this paper-weight, we would commence with a rough casting of Fig. 394 and proceed as follows:

(1) Chuck casting and rough off face *A* with the tool shown in Fig. 290, finishing and polishing at *A*.

(2) Bore out the cored hole to within a few thousandths of an inch with a common boring-tool, which must not have rake, and finish with reamer. With lathe rotating, remove the sharp outer corner of the hole with a scraper or otherwise.

(3) Place on arbor and machine *B*, *C*, *D* to dimensions, using tools Figs. 290 and 291. A semicircular scraper may be used for the fillet as shown in Figs. 97 and 98, and the exterior curved surface may be smoothed by a square-end scraper.

(4) Polish, first using file, then fine emery-cloth, and finally rouge-cloth or clean dry waste and fine emery. See also methods of polishing in Chapter XXIX.

For Fig. 395 proceed as follows:

(5) Saw off a piece of $^{15}/_{16}$″ round machine steel $3^{1}/_{4}$″ long.

(6) Center, face ends, and rough to $^{29}/_{32}$″ diameter.

(7) Machine tail-stock end (including *H*), making *O* smaller than *G*. *G* must be made .0005″ larger than the hole in Fig. 394 for a force fit.

(8) Reverse and machine other end to $^9/_{16}''$.

(9) Turn *K*, *M*, *N*, using preferably a forming-tool * for the spherical part. Finish and polish with file and emery-cloth and knurl as shown.

(10) File and polish hexagon ($^1/_2''$ across flats).

(11) Cut off *O* and *P*, and finish and polish extreme end of *N*. The piece may be held in a chuck (preferably a draw-in chuck) when finishing the extreme end of *N*, and a concave side-tool or a scraper may be used to precede the emery-cloth.

(12) Press stem into base, protecting ends with Babbitt metal or otherwise. An arbor-press or strong drill-press may be used to press in the stem.

Special Method of Machining a Cone Pulley.—As indicated in the chapter on turret-lathes, when work is machined in the engine-lathe

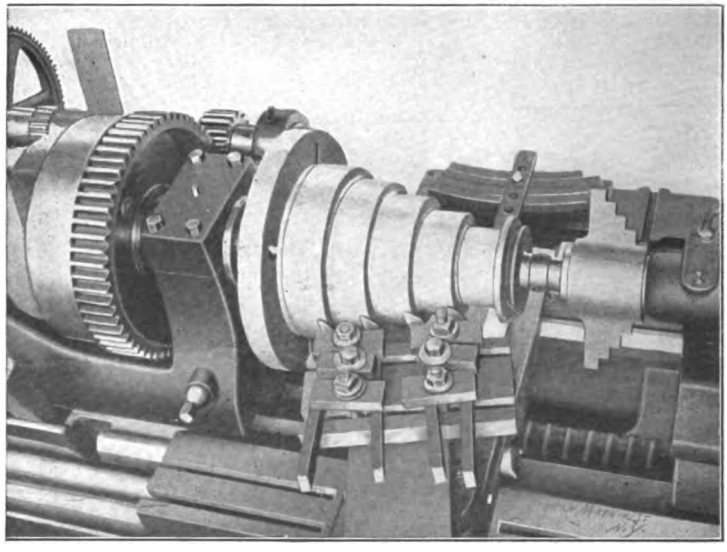

FIG. 396.

without special tools and fixtures the processes are comparatively slow. In contrast with these slow processes the attention of the reader is called to the method of machining a cone pulley, illustrated in Figs. 396 and 397. In the first figure several tools are shown in operation on the steps of a cone pulley, these tools being held in a special tool-holder.

* A good article on making forming-tools was published in the shop edition of "Machinery," June, 1904, page 339.

The sizes for the various steps are determined by adjusting the tools to the stepped gage held on the tail-spindle. In Fig. 397 the internal

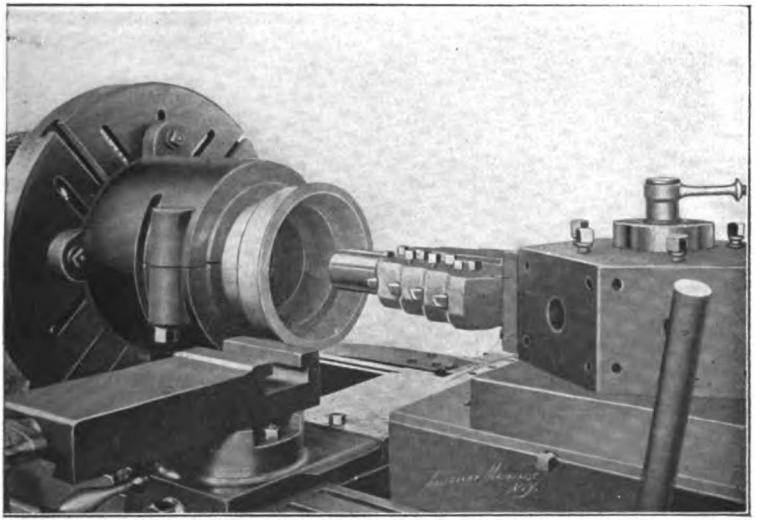

FIG. 397.

diameters of the cone pulley are bored simultaneously by the multiple cutter-head shown.

The construction of the split chuck used for gripping the pulley is worthy of note. Special chucks secured in this manner to the face-plate are usually centered by having a tongue or ledge on the chuck fit a corresponding recess turned in the face-plate. In some cases dowel-pins passing through the face-plate and chuck-ears are used instead. Any machining that is required in the inside of the chuck is always reserved until after the chuck has been fitted to the face-plate. In many cases it is preferable to make such chucks to screw directly on the lathe-spindle.

In machining a cone pulley the casting must pass through a number of different processes before it is completed. The two illustrations given are from an article by C. F. Pease in the "American Machinist," vol. 27, pages 613 and 614, showing the method followed by the Lodge & Shipley Company. The reader is referred to this article for further information on the subject.

Turning Curved Shapes.—Figs. 398 and 399 show two views of a ball-turning rest which is used interchangeably with an ordinary tool-

rest. In using this rest the lower slide is locked to the carriage and the cross-feed mechanism set in motion. As the cross-feed screw passes

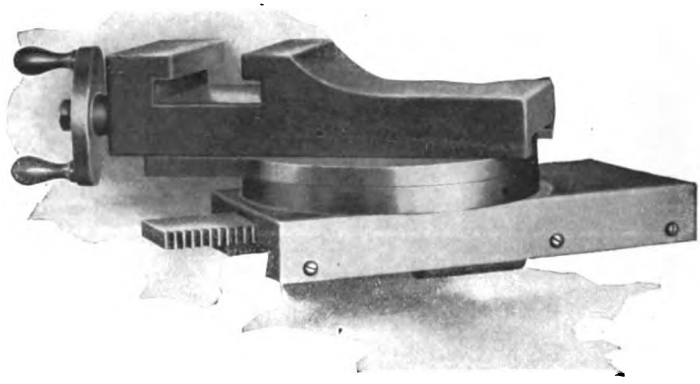

FIG. 398.

through the nut seen secured to the rack in the inverted view, the rotation of the screw causes longitudinal motion of the rack, and this in turn causes rotation of the rest by the gearing shown.

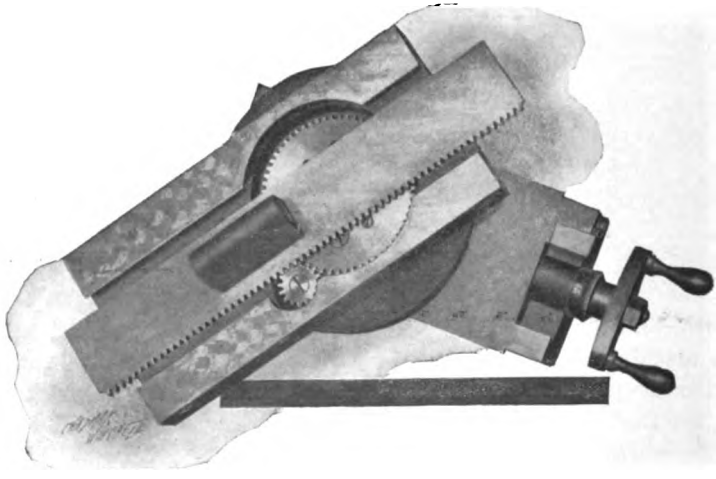

FIG. 399.

Figs. 400 and 401 show respectively a side view and an end view of a *ball-turning attachment* which may be bolted on top of a tool-rest

in place of the tool-post. This device consists of the main casting shown, in which is journaled a shaft having at its left end a slotted

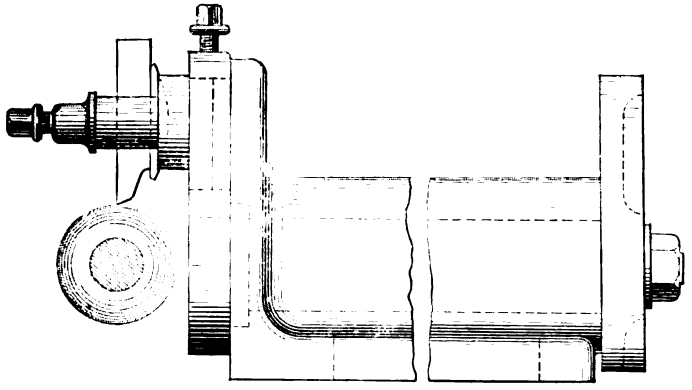

FIG. 400.

arm and a tool-post. The tool-post is held in the slotted arm by the top screw, the tool being held in the tool-post, as will be clearly under-

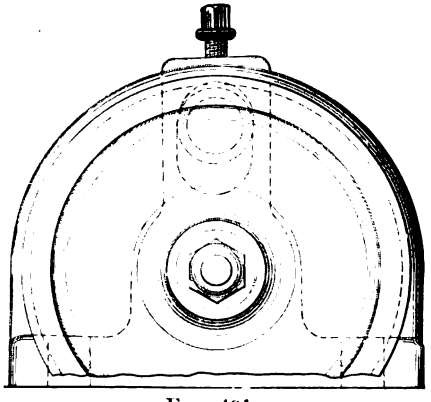

FIG. 401.

stood from the illustration. The disk-shaped casting, secured to the right end of the shaft by a key and the nut, may be either a spur-gear, driven by the gearing in the lathe-apron, or it may be a worm-gear operated by worm and handle. The illustration does not show the means for operating the device.

Ball-turning attachments may be used for turning work between

centers, such as the ball handles used on lathes. They may also be used for turning a ball on the end of a bar held in the chuck.

Other Methods of Turning Balls.—In the absence of any special attachment, balls are sometimes roughed out approximately right with a lathe-tool, and finished to a template by a common scraper. Fig. 402 shows a special scraper consisting of a bar of tool steel having a hole drilled in the end, and having its corner beveled to form a cutting-edge. In using the scraper the ball is first roughed out with a lathe-tool. The scraper is then pressed against the revolving ball, when it finds its own center and gives the

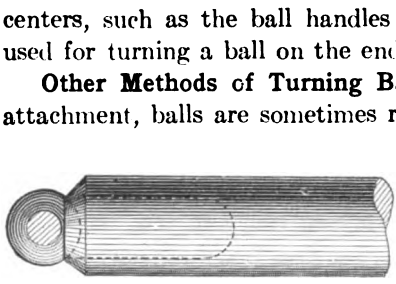

FIG. 402.

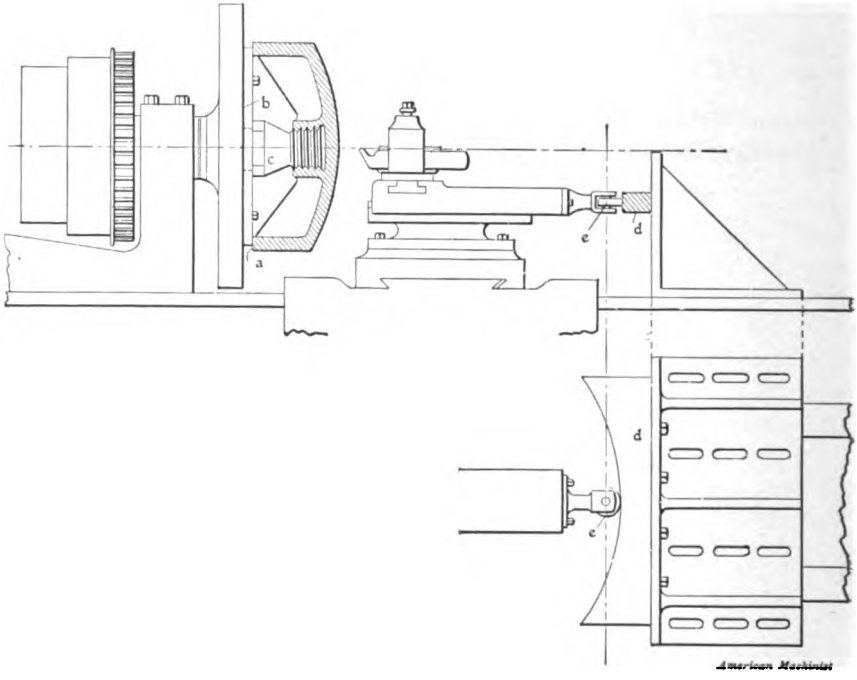

FIG. 403.

ball the spherical shape, regardless (within limits) of the diameter of hole in the tool. Balls may also be shaped by a lathe-tool, the end of which is made to the same form as the ball.

Turning Curved Shapes with Guiding Forms.—A great variety of curved shapes may be turned in connection with forms. Fig. 403 * shows, secured to the face-plate, a piece of work which is to be turned to a radius of 20″. A form *D* of the required shape is secured to a common angle plate, the latter being bolted to the lathe-bed. With a guiding roller *E*, journaled in a bracket on the rest, and a spring or weight tending to hold the roller in contact with the form, the cross-feed of the lathe is set in motion, when the tool will be forced to follow the required path. If a weight be used, it may be suspended by a rope attached to the lathe-carriage and running over a roller secured to the lathe-bed. When doing this work the feed-screw of the upper rest must be removed, and the carriage should be clamped to the lathe-bed.

Sometimes the work is of such a character as to require that the guiding form be held on the back side of the lathe-bed. In this case the guiding roller and rope are attached to the cross-slide, and the weight is suspended over a roller at the back side of the lathe. In shaping such work the cross-feed screw, or the nut for the same, must be removed and the carriage be fed longitudinally. Irregularly curved handles may be formed in this way. It should be understood that the shape turned with a pointed tool is not an exact duplicate of the form.

In accordance with the principle outlined, cams may be made in the engine-lathe. In doing such work, the cam blank and form are usually secured on an arbor, the latter being driven between lathe-centers in the usual manner. A revolving milling-cutter of the same diameter as the roller gives better results than a pointed tool. This arrangement, however, is more elaborate, as it requires a counter-shaft or other means for rotating the milling-cutter. The milling-cutter could be secured to a spindle running in a bracket held on the tool-rest.

Further instructions respecting lathe work are given in connection with the next chapter, and in the chapters on boring bars, etc.

---

* Cut first used in connection with an article by J. Wheeler in "American Machinist," vol. 27, page 557.

CHAPTER XVIII

THREAD-CUTTING IN THE ENGINE-LATHE

Meaning of the Terms "Pitch," "Lead," etc.—In transmitting power by belting there is generally a slight irregularity due to the slip of the belt. This is of no consequence in the ordinary feeding of the lathe-carriage, and the belt and pulleys are sufficiently accurate; but as stated in the chapter on Lathes, the mechanism used in moving the carriage for thread-cutting must be *positive* and accurate. In the chapter referred to, brief allusion was made to the method of cutting threads. In this chapter the subject will be further considered.

Imagine a rod held between the lathe-centers and caused to revolve with the spindle. If now a pointed tool held in the tool-post of the lathe be fed against the revolving rod, and the lathe-carriage be caused by the gearing to traverse the lathe-bed, the tool will cut a helical groove. This operation is called thread-cutting. The coarseness of a thread, or the distance that the carriage advances for each revolution of the rod, may be changed by changing the ratio of the gears which move the carriage. There is some confusion respecting the terms used to denote the coarseness of a thread, and it will be necessary to define these terms before proceeding further. The term *lead*, as used in the machine-shop, means the distance that a screw turning in a nut will advance in one revolution, or (as applied to a "lead-screw") the distance that the lathe-carriage is moved by one revolution of the lead-screw. The term *pitch* is used variously to indicate, first, the lead; second, the number of threads per inch, and third, the distance between the centers of two adjacent threads. The latter definition will be the one used in this work. If we wind a bit of sewing-thread helically around a rod so that the thread advances $1/4''$ in going once around, we shall have a good illustration of a *single-thread* screw of $1/4''$ lead. The pitch is also $1/4''$. Thus the pitch and lead are equal in a single-thread screw. Now if we wind another thread around the rod so that its helix shall describe a line centrally between the helical lines of the

first thread, the two threads together will illustrate a *double-thread* screw. But the pitch of the screw is changed to $^1/_8''$, while the lead remains $^1/_4''$ as before. In Fig. 404 we start at the right with a single-thread screw of $P = ^1/_2''$, and then cut another thread, when $P = ^1/_4''$. We may have any number of threads, but we seldom cut other than single, double, triple, and quadruple screws.

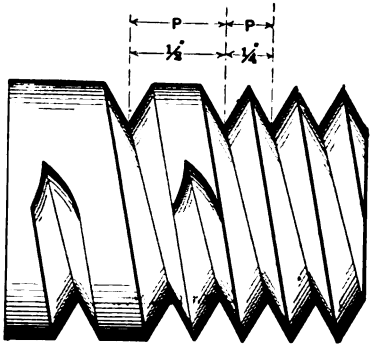

FIG. 404.

The expressions "threads per inch" and "turns per inch" are also used in connection with screw-cutting. As some lathe lead-screws have double threads the first term is misleading, and as a substitute for the latter we shall coin the more convenient word "inch-turns," meaning the number of turns a screw makes in a nut while advancing 1", or while moving the nut 1".

Computing the Change-gears.—The diagram in Fig. 405 will be used with the formulas for screw-cutting. In this figure c is the gear on spindle, or *gear on stud*, as it is sometimes called, d the intermediate, and f the gear on lead-screw. The number of the teeth in the intermediate does not affect the ratio, and this gear is not considered. In the formulas let c equal the number of teeth in stud-gear, f the teeth in lead-screw gear, L the inch-turns of lead-screw, and R the inch-turns of the required screw. Assuming that the gears which transmit motion to the stud have equal numbers of teeth, as is the case in most lathes, these gears will not affect the ratio. For convenience we shall speak of such a lathe as being geared one to one. Assume also that we have the following list of change-gears: 20 teeth, 40 teeth, 46, 48, 80, 100. Now let it be required to cut a screw of $^1/_4''$ lead, or 4 inch-turns, and let the lead-screw also be $^1/_4''$ lead. The proportions of the gears will be indicated by the following expression:

$$\frac{\text{Number inch-turns on lead-screw}}{\text{Number inch-turns on required screw}} = \frac{\text{number teeth in stud-gear}}{\text{number teeth in lead-screw gear}}.$$

Then by formula (1) $\frac{L}{R} = \frac{c}{f} = \frac{4}{4}$. $\frac{4}{4}$ then is the ratio of teeth in stud-gear to teeth in lead-screw gear. Now if we have no gears with less than 20 teeth we multiply both numerator and denominator by 5 and we have 20 teeth in each of these gears for 4 inch-turns, or $^1/_4''$ lead.

The greater the number of teeth in the lead-screw gear, or the smaller the number of teeth in the stud-gear, the greater will be the number of revolutions of the required screw to 1″ travel of the thread-tool. Therefore, if we wish to cut a thread of $^1/_8$″ lead or 8 inch-turns, other conditions remaining the same, all we need to do is to place a 40-tooth gear on the lead-screw. Thus by formula (1) $\frac{L}{R}=\frac{4}{8}=\frac{20}{40}$. In other words gears of equal numbers of teeth cut screws of same lead as the lead-screw, while doubling the number of teeth in lead-screw gear doubles the inch-turns of required screw, etc.

In some lathes the gears are not one to one, and in such a case we must ascertain the ratio of these gears and use this ratio in the formula. We may find the ratio of the gears by marking the stud-gear and lathe face-plate in relation to fixed points, and then turning the lathe-spindle and noting revolutions of stud-gear to one of face-plate. Assuming b to have 40 teeth and a 20 teeth, and lead-screw same as before, let it be required to cut screws of 4 inch-turns or $^1/_4$″ lead. Then by formula (2)

$$\frac{L\times\frac{b}{a}}{R}=\frac{c}{f}=\frac{4\times\frac{40}{20}}{4}=\frac{8}{4}.$$

Multiplying both terms by 5 as before, we have

$$\frac{8}{4}\times\frac{5}{5}=\frac{40}{20}=\frac{\text{stud-gear teeth}}{\text{screw-gear teeth}}.$$

Again, assume a lead-screw of 6 inch-turns and let it be required to cut a screw of $11^1/_2$ inch-turns, then

$$\frac{L\times\frac{b}{a}}{R}=\frac{6\times\frac{40}{20}}{11^1/_2}=\frac{12}{11^1/_2}\times\frac{4}{4}=\frac{48}{46}=\frac{\text{teeth in stud-gear}}{\text{teeth in lead-screw gear}}.$$

Compound Gearing.—The system of gearing shown in Fig. 405 is called *simple* or *single gearing*, because there is only one gear on the intermediate shaft, and as has been intimated, this does not affect the velocity ratio of the stud- and screw-gears. Some lathes have several intermediate gears in the same vertical plane, the stud-gear being placed on the outer end of the main spindle. This arrangement gives the same results as the one intermediate. But when there are two intermediates of different diameters on the same shaft, then we have *com-*

pound gearing, and the intermediate gears must be taken into account in the calculation.

Some lathes are so designed that a wide range of inch-turns cannot be obtained by single gearing. In such a lathe both single and compound gearing are used. Fig. 406 shows a diagram applicable to compound gearing, and formula (3) has been prepared for use with this diagram. Formula (3):

FIG. 405

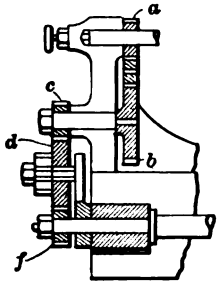

Single Gearing

(1) $\frac{L}{R}=\frac{c}{f}$

R = Inch-turns on required screw;

FIG. 405.

FIG. 406

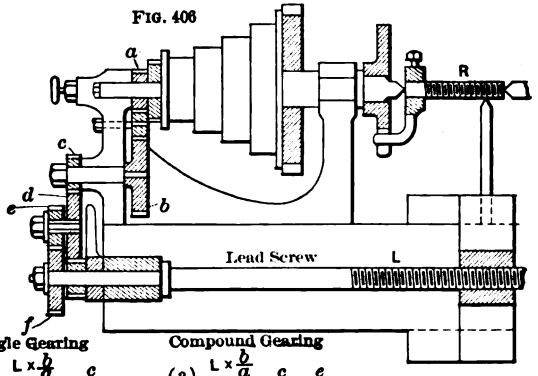

Compound Gearing

(2) $\frac{L\times\frac{b}{a}}{R}=\frac{c}{f}$

(3) $\frac{L\times\frac{b}{a}}{R}=\frac{c}{d}\times\frac{e}{f}$

L = Same on lead screw.

FIG. 406.

$$\frac{L\times\frac{b}{a}}{R}=\frac{c}{d}\times\frac{e}{f} \quad \text{or} \quad \frac{L\times\frac{b}{a}}{R}\div\frac{c}{d}=\frac{e}{f} \quad \text{or} \quad \frac{L\times\frac{b}{a}}{R}\div\frac{e}{f}=\frac{c}{d}.$$

Let it be required to cut a screw of say 40 inch-turns in a lathe having a lead-screw of $1/4''$ lead, or 4 inch-turns, and having gears a and b 1 to 1. If we compute by formula (1) we shall have,

$$\frac{L}{R}=\frac{c}{f}=\frac{4}{40}=\frac{20}{200}.$$

These are the proportions of the gears that could be used by single gearing, but we have no gear of 200 teeth. If we select 40 and 80 for c and d respectively, the proportions of the mating gears at e and f may be found as indicated in formula (3) by dividing $\frac{20}{200}$ by $\frac{40}{80}$. Thus

$$\frac{20}{200}=\frac{1}{10} \text{ and } \frac{40}{80}=\frac{1}{2};\ \frac{1}{10}\div\frac{1}{2}=\frac{1}{10}\times\frac{2}{1}=\frac{2}{10}.$$

In looking through our list of gears we find 20 and 100, which may be used for the proportion $\frac{2}{10}$. Substituting these values in the formula we have,

$$\frac{4\times\frac{1}{1}}{40}=\frac{40}{80}\times\frac{20}{100}=\frac{1}{2}\times\frac{1}{5}=\frac{1}{10}.$$

Metric and Fractional Threads.—It sometimes happens that we have to cut a metric screw on an ordinary American lathe. For this purpose we need one gear having 127 teeth; this is called a "translating" gear. It is found as follows: 1000 millimetres = 1 metre = 39.37″ in length. $1000\div 39.37 = 25.40005$ = millimetres in 1″. Therefore to cut a screw of 1 millimetre lead (= 25.4 inch-turns) in a lathe geared 1 to 1 and with lead-screw = 4 inch-turns, we have by formula (1) $\frac{4}{25.4}\times\frac{5}{5}=\frac{20}{127}=\frac{c}{f}$. We cannot use any smaller gear than 127 because no smaller number is divisible by 25.4 without a remainder. The gear on stud will, of course, depend on the inch-turns of lead-screw, but whatever number of teeth it may have we should multiply that number by 2 for a screw having 2 millimetres lead, by 4 for 4 millimetres lead, etc. This can be proved by the formula as follows. Assuming a lead-screw of 4 inch-turns, let it be required to compute change-gears for 1, 2, and 4 millimetres.

$$\frac{L}{R}=\frac{4}{25.4}=\frac{4}{25.4}\times\frac{5}{5}=\frac{20}{127}=\text{gears for 1 millimetre lead.}$$

$$\frac{L}{R}=\frac{4}{25.4\div 2}\times\frac{10}{10}=\frac{40}{127}\quad=\text{“ “ 2 “ “}$$

$$\frac{L}{R}=\frac{4}{25.4\div 4}\times\frac{20}{20}=\frac{80}{127}\quad=\text{“ “ 4 “ “}$$

The simple formulas and methods here outlined involve the principles common to all gearing computation in which velocity ratios are concerned. The methods used in computing change-gears for metric threads will apply equally well to fractional threads. By substituting diameters for numbers of teeth in the formulas, they may also be applied to belt and pulley transmission. The student should study these principles in connection with the machines in the shop until he thoroughly understands them.

Cutting a Fractional Thread with Change-gears of Approximately Correct Proportions.—It is possible to cut a fractional thread on a parallel shaft with gears which vary slightly from correct proportions. This may be effected by setting the tail-stock over to give the necessary variation from the formula results, and then adjusting the taper attachment to make the tool follow the parallel side of the shaft. The amount to set the tail-stock over can be computed very closely. Special care, however, is required to so arrange the contact between the lathe-dog and face-plate as to prevent a variable motion being imparted to the work. This method is sometimes employed in threading taps to compensate for the change in lead caused in the tempering process. For a full discussion of this method see "American Machinist" of April 3, 1902 page 479, and the January, 1904, number of "Machinery," page 273, regular edition.

Methods of Setting Thread-tools.—The United States standard and V-thread tools should be so set, in relation to the work, that a line bisect-

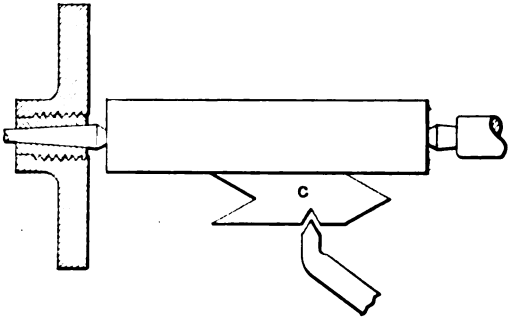

FIG. 407.

ing the angle formed by the two cutting-edges of the tool shall be at right angles to the axis of the work. Figs. 407, 408, and 409 show the methods of setting these tools. Fig. 407 is the simplest case. In this figure we have a cylinder of uniform diameter upon which it is required to cut V threads. The cylinder is, of course, adjusted with its axis parallel to the lathe-shears, and the gage *C* has the 60° V groove so formed in relation to its parallel sides as to conform to the conditions above expressed respecting the point of the lathe-tool. It is obvious then that, if the tool be adjusted to correspond with the groove in *C*, the latter being held against the side of the cylinder as shown, the tool will be properly adjusted in relation to the work. Fig. 408, which

shows the same principle applied to internal work, will be sufficiently clear without further explanation.

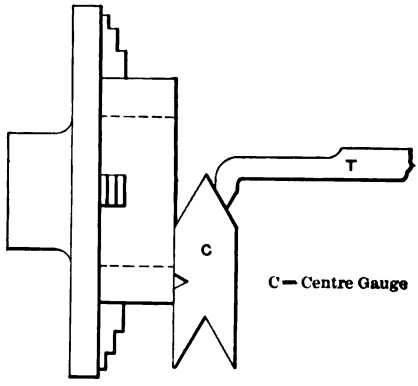

FIG. 408.

Fig. 409 shows the method of setting the tool for a tapering screw. In this case it will not do to use the gage against the side of the blank,

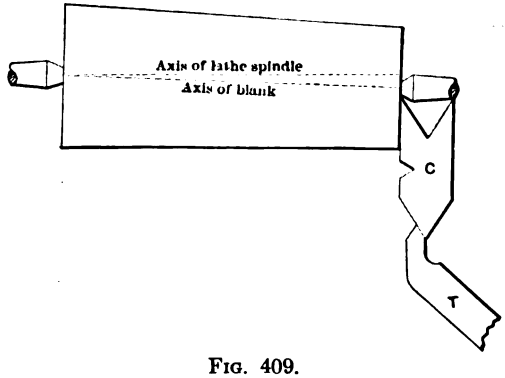

FIG. 409.

because the sides are not parallel with the axis. But if the side of the gage be pressed against the true end of the blank, and the tool be adjusted so that one of its edges coincides with the side of the gage as shown, the thread will be normal to the axis of the screw, as required. This method will apply whether the taper of the thread be made by the taper attachment or by setting the tail-stock over. *The former is the more accurate method.*

The lead of all threads, *including taper threads,* should be *measured parallel with the axis of the screw.*

The gage *C* will not answer for other threads than V and the United States standard, but simple gages may be made on the same principle for other threads.

Some Precautions and Principles in Connection with Thread-cutting. —Fig. 410 shows a short shaft upon which three different leads of U. S.

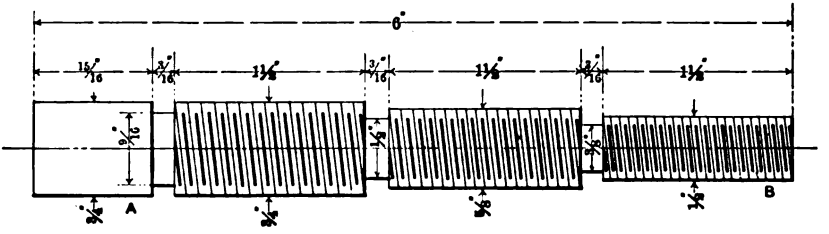

FIG. 410.

standard threads are required. The threads, which are represented by the conventional method, are 13, 11, and 10 inch-turns respectively for the $^1/_2$-, $^5/_8$-, and $^3/_4$-inch diameters. We shall not give in detail the order of operations for this work, except to state that the blank is turned completely to the dimensions of the drawing before the thread-cutting is begun. The numbered paragraphs state principles applicable to Fig. 410 and to thread-cutting in general. It is more difficult to do smooth thread-cutting than smooth turning on a plain cylinder. To insure good work careful attention must be given to the following instructions.

(1) It is preferable to have one tool for roughing and one for finishing the thread. The finishing-tool should be ground and oil-stoned with special care.

(2) To get the most accurate shape of thread, the top of the tools should be ground flat and set even, horizontally, with the point of the lathe-center, as shown in Fig. 411. However, in ordinary work, to make the tool peel the metal more smoothly, it may be permissible to give the roughing-tool a slight degree of top rake.

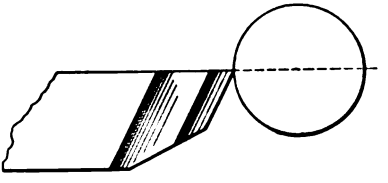

FIG. 411.

(3) The tool must be so ground as to have approximately equal clearance on each side in the thread. When thus ground the sides

of the tool at the cutting end will incline in the direction of the thread; that is to say they will lean toward the left in right-hand thread, and toward the right in left-hand thread. See Fig. 418. This side clearance of the tool must extend to the extreme top edge. Beginners are very likely to leave about $^1/_{64}$ or $^1/_{32}$ inch at the top edge without side clearance and then wonder why the tool does not cut.

(4) The tool must not project farther than necessary from the tool-post, and the tail-spindle must not be screwed out from the tail-stock more than sufficient to give ample clearance of lathe-carriage. This latter point should be provided for before starting to cut the thread; otherwise, in reversing the lathe the carriage may be forced against the tail-stock and strain the mechanism in the lathe-apron.

(5) To avoid marring the finished surface, leave the blank about $^1/_{16}$" larger at *A* than drawing until the thread-cutting is done. To finish this end, use a special screw-dog as in Fig. 337, or screw a $^1/_2$" nut, split on one side, on *B* and drive the blank by a lathe-dog on the nut.

(6) If the lathe has a compound rest, the upper slide should be turned about 30° in the direction of the tail-stock. If then the tool be taken out for grinding, it may be adjusted to the thread by movement of the upper rest. If a lathe having no compound rest be used, the tool may be adjusted laterally by disengaging the reversing gears, pulling the spindle around by hand until the thread is in line with the tool and then reengaging the gears. Some mechanics, in cutting 60° thread, prefer to set the upper or compound rest at 30° and feed the tools toward the thread by this rest, using first a roughing thread-tool and then two finishing-tools, one for each side of the thread. These tools are given rake and, when cutting on one side only, they cut without gouging. See Fig. 412.*

The gibs of the rests must be snugly adjusted when cutting thread.

(7) In taking the final smoothing cuts on the thread, if the tool does not respond to light pressure, it is an indication that it is either dull, or has insufficient clearance, or is defective in some other way. Under such conditions the tool will either gouge into and take a heavy cut, making a rough thread, or it will not cut at all. When all other conditions are right the failure may be caused by a low temper in the tool. To avoid spoiling the thread the difficulty should be remedied before proceeding further.

Use of the Thread Stop-gage.—Several cuts will be required to complete each of the above threads, the greatest number of cuts being

* Fig. 412 was copied from a cut illustrating an article by "A Mechanic" in "American Machinist," July 31, 1890, page 10.

required on the coarsest lead. The depth of the cut is determined by the judgment of the workman, but the roughing cuts are, of course,

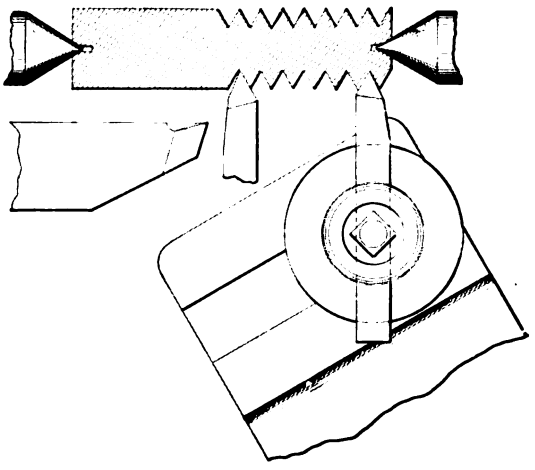

FIG. 412.

much deeper than the finishing cuts. Most lathes are provided with a *thread stop-gage* like that shown in Fig. 231. In cutting short threads like those in Fig. 410, when the tool reaches the end of the thread it is quickly withdrawn by the cross-feed handle and the motion of the lathe is reversed. During the backward traverse of the lathe-carriage, the screw *S* of the stop-gage is adjusted for the next cut.

Cutting Square Threads. — Fig. 413 shows a square-thread screw and nut to which the following instructions apply.

(1) Chuck the nut and face outer end with roughing-tool, finishing with side-tool.

(2) Turn as at *A* (Fig. 414) with centering-tool (see Fig. 376) for entry of drill. Drill with $^{13}/_{16}''$ twist-drill, finishing to $^{7}/_{8}''$ with boring-tool and reamer. Counter-bore as at *B* (Fig. 415) as a guide for gaging depth of thread.

(3) Rough out thread with tool like Fig. 416, finishing with tool full width like Fig. 417. It must fit a nut-arbor, which may also answer for a gage. A tap is sometimes used to size the nut-thread.

(4) To turn the outside, screw nut on arbor and proceed to finish in the same manner as with collar referred to in the first example of lathe work, Chapter XVII.

(5) For the screw, cut off $1\,^3/_{16}''$ round machine steel $7\,^1/_{16}''$ long. Center and face ends to length. Turn blank to $1\,^1/_8''$ diameter for thread, leaving it larger at *C*.

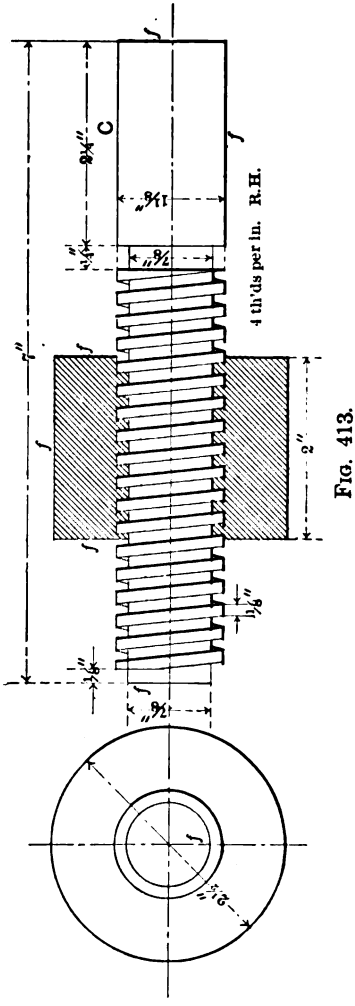

Fig. 413.

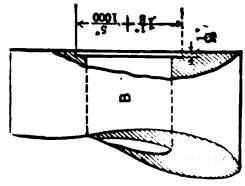

Fig. 415.

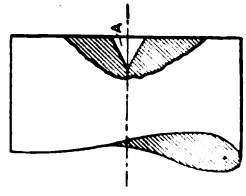

Fig. 414.

(6) Before cutting the thread, read again the instructions given in connection with Fig. 410.

(7) Rough out thread with outside thread-tool having point like Fig. 416, and finish with tool having point full width like Fig. 417, testing

fit by a gage or by the nut. The sides of the thread-tool at the end must lean toward the left and have clearance to the extreme edge as at *E*, Fig. 418.

(8) Polish with oil and emery on soft-pine stick. Screw thread end into threaded driver and turn and polish end *C*.

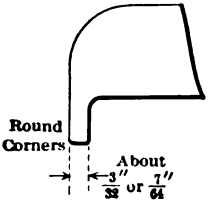

FIG. 416.

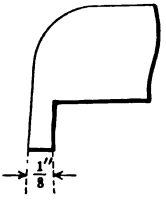

FIG. 417.

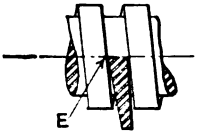

FIG. 418.

(9) In connection with this exercise the student should learn to "catch the thread" without reversing the lathe. To do this stop the lathe just before the tool reaches the end of the thread and turn it the remainder of the way by hand, bringing it to rest in a definite position, which should be noted by making a witness-mark on the face-plate in line with some fixed point or mark about the lathe. Now disengage the lead-screw nut and move the carriage back for the next cut a distance which must be divisble without a remainder by the lead of both the screw being cut and the lead-screw. This position of the carriage should be noted by chalking the lathe-bed or by measuring the distance between the thread-tool and the end of the tail-stock spindle. Having carefully followed the above instructions the lead-screw nut may now be reengaged and the lathe started, when the tool will follow the thread as accurately as though the lathe had been reversed.

By marking the face-plate, lead-screw gear, and carriage positions, and starting and stopping with these in same positions for each traverse, any thread will "catch."

When the number of inch-turns of the thread being cut is a multiple of the inch-turns of the threads on the lead-screw, the carriage may be engaged in any position without changing the alinement of thread-tool with thread.

It is not always permissible to cut a groove for the exit of the thread-tool, as is done in Fig. 413. Another way is to drill a shallow hole, equal in diameter to the width of the thread, where the thread is to stop. The thread-tool must be adjusted so as to have the thread follow centrally with the hole.

Cutting a Left-hand Worm-thread.—A worm-thread screw is used to operate a worm-gear. Such gearing is commonly used in some designs of elevators. It is also used in some lathes (see apron mechanism in chapter on Lathes). The order of operations for cutting the worm shown in Fig. 419 may be as follows:

(1) Cut off machine-steel stock $1^{9}/_{16}$″ diameter by $5^{1}/_{16}$″ long. Center and finish the ends.

(2) Rough out blank all over, leaving it about $^{1}/_{16}$″ larger than

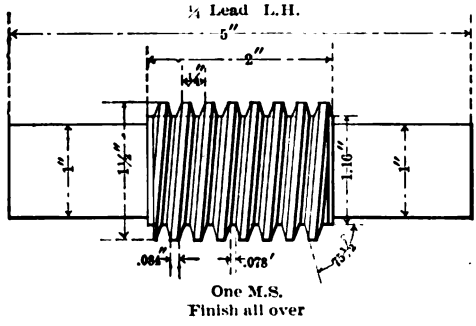

Fig. 419.

Fig. 421.

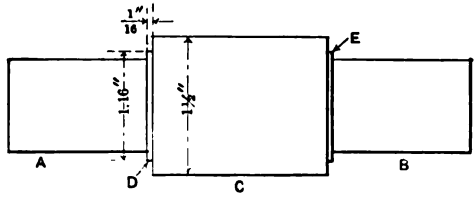

Fig. 420.

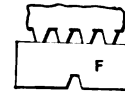

Fig. 422.

drawing at *A* and *B*, Fig. 420. Turn to finished diameter at *C*. Turn shoulders *D* and *E* by which to gage depth of thread.

(3) This thread being left-hand, the thread must be started at the left, and the sides of each thread-tool at its end must incline toward the right, as explained on page 286. Rough out thread with a narrow-pointed round-nose tool having rake, taking care to leave sufficient stock for the finishing-tool. Finish with tool like that represented in Fig. 421, testing thread by gage as in Fig. 422. Gage *F* may also be used for setting the tool in correct relation with the work.

(4) Turn ends *A* and *B* to size of drawing and polish thread and ends as in the previous work.

Theoretical Difficulties in Thread-cutting.—There are certain theoretical refinements connected with thread-cutting which are generally neglected in ordinary practice. The shape or angle of a thread should be measured in a plane parallel with the axis of the screw. But if a V-thread tool, for instance, be ground to fit the 60° gage and adjusted to bring its top face normal to the sides of the thread helix (as it should be adjusted to make both edges of the tool cut equally free) the thread will not be 60° when measured as indicated above. This may be easily demonstrated as follows: Place the V point of the thread-gage between the sides of the thread with its top face in a plane passing through the axis of the screw. Now incline the gage, bringing its face to an angle of 45° with the first position. It will be seen that the edges of the gage no longer fit the thread.

There are also certain difficulties in connection with square and other shapes of threads, but these difficulties are of little importance in threads of fine lead. In cutting threads of coarse leads, each side of the thread may be cut *independently* and tested by a gage somewhat similar to that shown in Fig. 422, the latter being applied in a plane passing through the axis of the screw as in the V thread. This method has the advantage that the tool may be ground with side rake.

Geometrical Method of Determining the Side Clearance of Square-thread Tools.—In cutting threads of coarse leads, special attention

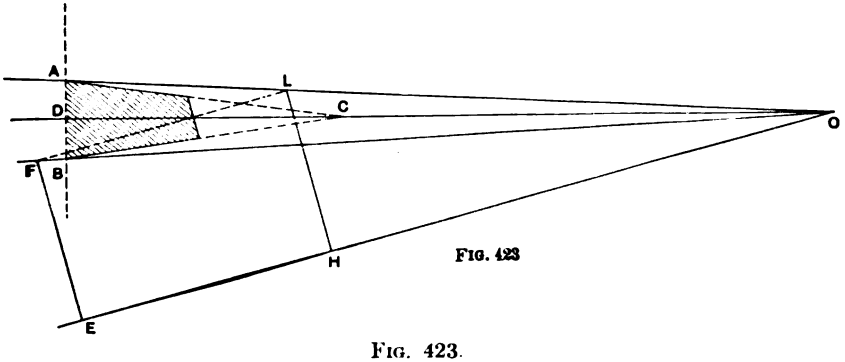

FIG. 423.

must be given to the side clearance. The following method, referring to Fig. 423, is taken from a pamphlet published by the Gisholt Machine Company descriptive of their universal tool-grinder:

"On the line *EO* lay off *OH* equal to the circumference of the screw at the bottom of the thread, and *EO* equal to the circumference

at the top of the thread. At E and H erect perpendiculars EF and HL equal to the pitch of the screw. Draw OF and OL, then will the angle EOF be equal to the angle of the thread at the outside of the screw, and EOL will equal the angle at the bottom of the thread. Lay off CAL and CBO equal to 5°. Draw CA and CB. Draw AB at right angles to the center line CD. Then AB will be the top of the tool and AC and BC the sides. By this construction there will be equal angles of clearance on each side."

The top face of the tool should be normal to the side of the thread at its mean diameter, as at AB, Fig. 424, and the front edge should be

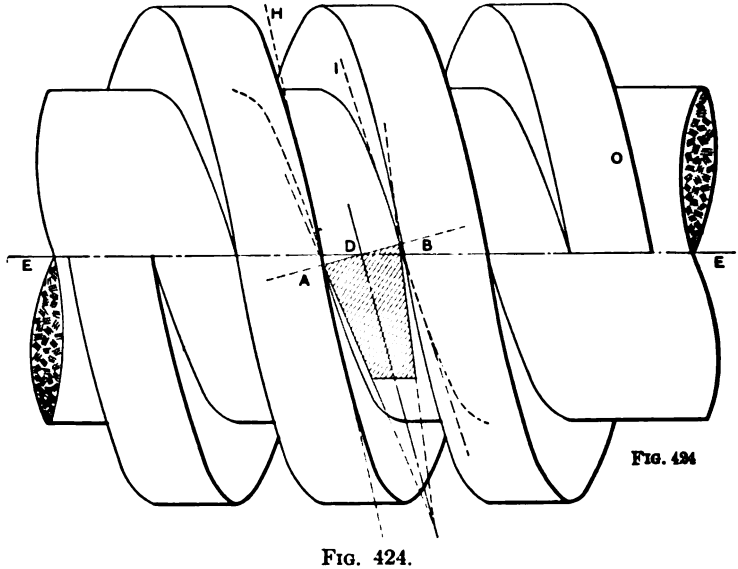

FIG. 424.

slightly concave. These considerations are generally neglected on threads 4 pitch and finer.

Spacing Multiple Threads.—In cutting multiple threads, the thread may be spaced by using the face-plate of the lathe as an index. For this purpose the slots in the face-plate should be machined in the milling-machine in connection with the dividing head. Thus, let it be required to cut a double thread. Now assuming that we have two slots in the face-plate diametrically opposite, all that we need to do after cutting the first thread is to take the work out *without unscrewing the dog* and place it back again with the tail of the dog in the *opposite* slot.

If the lathe be geared one to one, and the gear on the stud have an even number of teeth, the double thread may be spaced by marking a tooth on the stud-gear to coincide with a mark on the intermediate gear, and then disengaging the intermediate gear and turning the lathe one half revolution, to bring the tooth diametrically opposite in mesh at the mark on the intermediate gear.

CHAPTER XIX

SCREW-THREADS, TAPS, AND DIES—BOLT- AND NUT-THREADING MACHINES

U. S. Standard and V Thread.—The subject of screw-threads is treated in most books on machine design; it is also briefly discussed in this work in connection with the subject of screw-cutting. It will be necessary, however, to refer to certain practical considerations in this connection. The simplest form of thread is known as the V thread. This is generally so made that the sides of the V form an angle of 60°. The objection to this thread is that the sharp edges are easily bruised, and also too quickly wear smaller than the nominal size.

Improvements Affecting Durability of Thread.—To overcome both of these objections the thread known as the U. S. standard has been

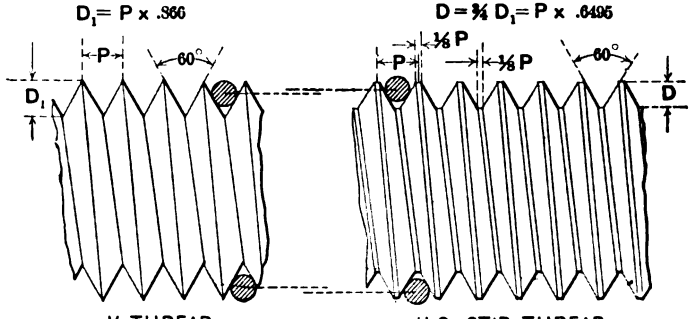

V THREAD
FIG. 425.

U.S. ST'D THREAD
FIG. 426.

FIG. 427.

introduced. This thread also has its sides at an angle of 60°, but unlike the V thread it is filled in at the bottom of the V and cut off at the top, forming flat tops and bottoms. The length of these flats equals $^1/_8$ the distance from center of one thread to the center of the next. To overcome the difficulties connected with the V thread, Sir Joseph Whitworth, of England, originated the "Whitworth thread." This thread is rounded at top and bottom and its sides are 55° included angle.

Difference in Effective Diameters of U. S. Standard and V Thread.—Figs. 425 and 426 show full-size views of V-thread and U. S. standard screws, both being of the same outside diameter. The center lines passing through the sectioned balls show that there is considerable difference in the effective diameters of the two screws. This difference may also be seen in Fig. 427, in which the full lines show the U. S. standard and the dotted lines, the V thread.

Square and Acme Thread.—Other threads in common use are the square thread and the acme thread. The square thread, as is implied by its name, has its sides at right angles with the axis, and is flat on top and bottom. The width of the thread at top and bottom is usually made equal to its depth. As a rule this thread is used in places where a long screw and short nut are required. In such a case, if it is desirable to have

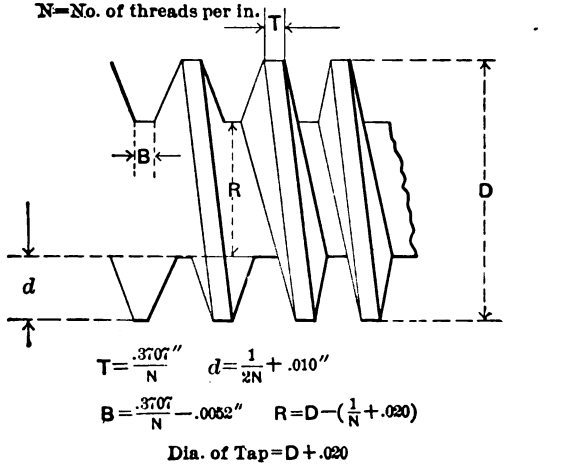

FIG. 428.

the nut last approximately as long as the screw, the spaces between the threads on the screw should be wider than the flat top of the thread. This leaves the thread in the nut thicker than in the screw.

For some purposes, as for instance the lead-screws on lathes, a sort of compromise between the square thread and the U. S. standard is desirable. For these purposes a thread having flat tops and bottoms and angling sides has been used, but until recently there has been no standard for this thread. A few years ago Messrs. Handy & Powell proposed a standard for this thread, the proportions of which are given

in connection with Fig. 428. These formulas are also published in the catalogs of the Brown & Sharpe Manufacturing Company. This thread has its sides at an angle of 29° (included angle), and is known as the Powell or "acme" thread.

Pipe-threads.—Pipe-threads are similar to the 60° V threads, excepting that the tops and bottoms are slightly rounded, making the depth only $^4/_5$ of the pitch instead of equal to the pitch.

Considerations Governing the System of Threads to be Adopted in Starting a New Plant.—In starting a machine-shop it is necessary in the outset to determine the system of threads to be used. The proper thing to do is to *adopt the U. S. standard for general purposes*, the acme thread for work of the character of lathe lead-screws, etc., and the square thread (seldom used) as occasion may require. But this is not the universal practice. Some still use the old V thread, and, even when supplying U. S. standard, some screw-makers—unless otherwise ordered —*will send* $^1/_2$*" screws with twelve threads per inch*, when the U. S. standard is thirteen for this size.

Variation from the U. S. Standard.—*For screws below* $^1/_4$*"* very little attention is paid to the U. S. standard. The diameter of these screws generally conforms to a screw-gage having decimal dimensions, and there is considerable *variation respecting the pitch.* In some special lines of machinery, bicycles for instance, there is a very material departure from U. S. standard. Some bicycle-makers use twenty threads per inch on the $^1/_2$" pedal-shaft where it screws into the crank, and when the threads wear out in the crank, the repairer retaps it with a $^5/_8$" tap having twenty-four threads per inch, using a bushing between. It is doubtful whether the U. S. standard is adapted to work of this character.

Nominal and Actual Diameter of Pipe. Extra Strong, Double Extra Strong, etc. — The method of designating wrought-iron pipe is somewhat confusing to the novice. When we speak of a given size pipe we refer to the *diameter of* the *hole.* Thus 1" pipe means pipe with 1" internal diameter; but the actual diameter varies considerably in some sizes from the nominal. 1" pipe is 1.048" internal diameter and $2^1/_2$" pipe is 2.468", the outside diameters being 1.315 and 2.875 inches respectively. Thus far there is no special difficulty, but we have, in addition to the above, extra-strong and double-extra-strong pipe. In both the extra metal is added to the inside, while the pipe retains the same designation as though no change had been made in the thickness. Accordingly 1" extra-strong pipe is .951" actual inside diameter, and 1" double-extra-strong is .58" inside diameter. The

outside diameter remains 1.315″ as in the thin pipe. Interchangeability in the fittings necessitates the uniformity in the outside diameters.

Taps.—A tap is a kind of steel screw tempered and having grooves, forming cutting-edges, cut lengthwise the screw. There are various

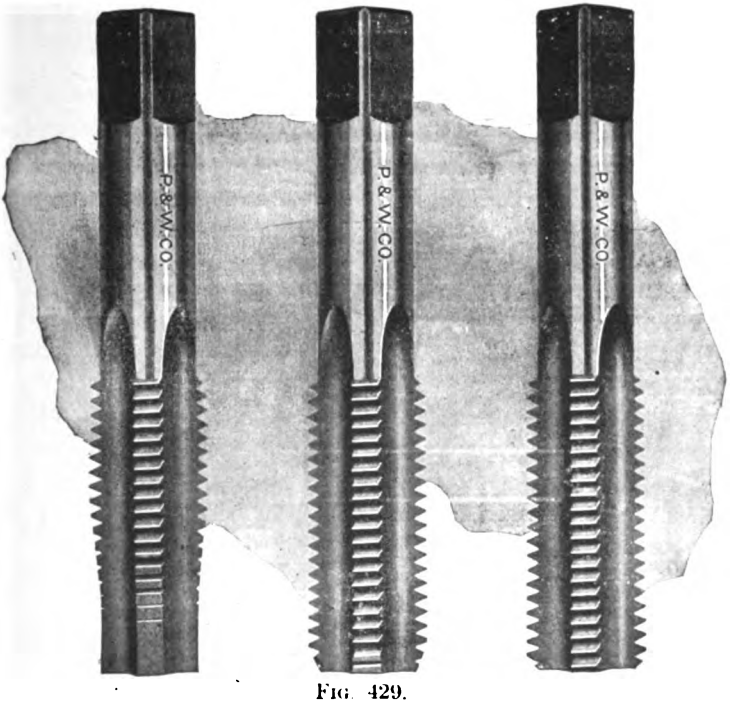

FIG. 429.

kinds of taps in use. Among the taps in most common use are hand-taps and machine-taps, pulley-taps and pipe-taps. There are also various special taps. A standard set of *machinists' hand-taps* is shown in Fig. 429; these are called taper, plug, and bottoming taps in the order in which they are shown in the cut. The taper tap is made tapering on the thread end to facilitate starting it in the work. The hole to be tapped is drilled the same diameter as the tap at the bottom of the thread, or a little larger. The tap is screwed into the hole (forming thread as it goes) by means of a tap-lever or wrench applied at the shank end. If the piece to be tapped is only an inch or so thick and the hole passes quite through, the taper tap may be screwed entirely through the hole and the thread thus finished. If the hole does not pass through the work, the plug tap may be used to finish the thread near the bottom.

It will be noticed that the plug tap has a short bevel on the end, and that the last two or three threads are imperfect. If threads are wanted at the extreme bottom of the hole the bottoming tap is used to finish the thread. All the threads of this tap are "full."

Nuts are usually tapped by machinery, a tap somewhat resembling the taper hand-tap being used for this work. Such a tap is shown in Fig. 430; it is called a machine-tap.

When set-screws are used in the hub of a pulley to secure it to the shaft, the **pulley-tap** is generally used. This tap is shown in Fig. 431. In most cases the hole is drilled through both the rim and hub, the hole in the rim being drilled slightly larger than the largest diameter of the tap. The shank part of the pulley-tap is always made quite long, so that the square end may project through the pulley-rim. Manufacturers will make pulley-taps in lengths to suit the customer.

The Pipe-tap is a short tap having a taper on the thread part of $^3/_4$" (in diameter) per foot of length. It is used in connection with steam- and gas-fittings, etc. (see Fig. 432). The pipe-tap is sometimes made with the drill on the end, so that the hole may be drilled and tapped in one operation. This design is illustrated in Fig. 433, in which *D* is the drill and *S* the shank. The shank is made tapering to fit in the spindle of a ratchet-drill, by which the tap is operated.

The tap used for tapping dies is called a *hob*.

There is a kind of bolt used to hold together the inner and outer plates on boiler fire-boxes. The holes for these bolts are tapped with a tool called a **stay-bolt tap.** As ordinarily made, this is a tap and reamer combined. It is clearly shown in Fig. 434. The special taps for other purposes do not differ greatly from those described.

Thread-dies.—The moulds or forms used in connection with presses for making hollow ware, etc., are called dies. To distinguish the device used for forming threads on screws from the latter, it should be called a thread-die. Nevertheless a thread-die is commonly called a *die*, and we shall use the same term in this chapter. In cutting thread with a die, the die is screwed on the rod, cutting the thread as it goes. Fig. 435 shows a "solid" die, so called because it is not adjustable. The solid die can be used for one size of screw only, and when used to make full threads in one passage over the screw, it soon wears larger than standard. When used to take a fine finishing cut only, being preceded by a roughing-die, it is more reliable.

Fig. 436 shows a sectional view and a bottom view of a square die similar to that represented by Fig. 435. The openings *A* are made to

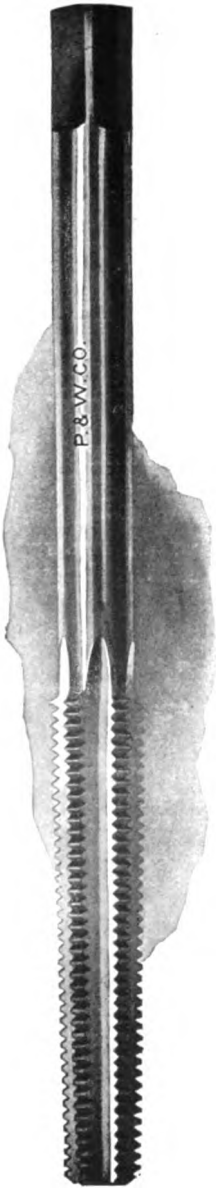

FIG. 430.

FIG. 431.

FIG. 432.

FIG. 433.

lessen the bearing and friction, and at the same time they serve as outlets for the chips. The parts *E* are referred to as the *lands*. The advancing edge of the land is the cutting-edge and the remaining part, the *heel*.

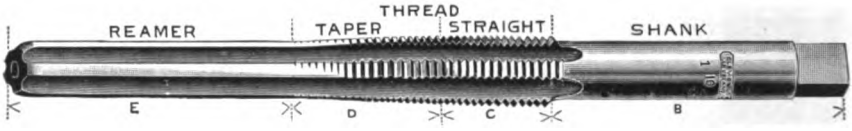

FIG. 434.

Making a Solid Die.—The general principles employed in making a square solid die are very much the same as for other dies, and it may be well to describe a method of making this die. In factories where

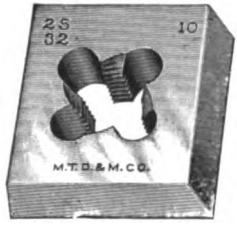

FIG. 435.

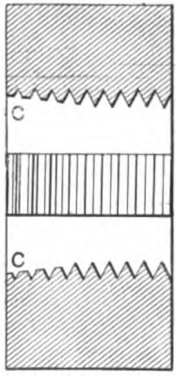

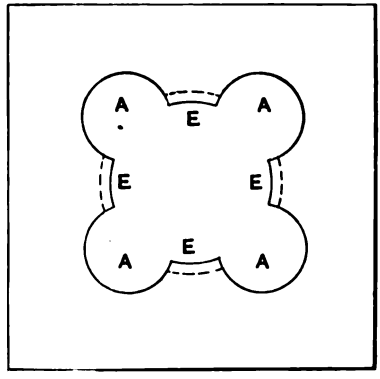

FIG. 436.

taps and dies are made as a specialty the best facilities must, of course, be employed; but the method that we shall describe is a kind of "home-made" plan, applying to the making of a single die. The short diameter of the square die may be $2^1/_4$ times the diameter of the bolt to be cut, and its thickness may be about $1^1/_4$ times the diameter of the bolt. When a number of different sizes of dies are to fit one stock, the dimensions of some of them would be greater than above indicated.

Having forged and machined the die blank to the proper dimensions, the next thing in order is to drill it. The center of the blank may be established by drawing intersecting lines diagonally across its face, and after prick-punching the center, two circles, one the diameter of the drill and the other somewhat larger, should be drawn on the blank. The surface of the blank may be covered with blue vitriol to take clearly

defined lines. The drilling is usually done in the lathe, the blank being held in the chuck or strapped to the face-plate. The blank may be adjusted by the circles in connection with a scriber held in the tool-post. The tang of an old file ground to a point is sometimes used for this purpose. Again, some prefer to use an indicator. The hole for the thread in the solid die should be made equal to the bottom of the thread of the bolt to be cut. It may be drilled and bored according to instructions given elsewhere for such operations.

Having made the hole of the required size, the thread must next be cut. The threading may be done by an inside thread-tool, using good lard-oil as a lubricant. The finishing cuts should be *very light*, and the thread-tool for this purpose should be in the *best possible condition*. If a good tap of the right size be available, it would be well to take the finishing cut with this tap; but as the pitch of taps is sometimes slightly altered in the hardening process, the thread must not be cut too near the final size with the thread-tool, lest the tool-marks be seen after the hole has been tapped.

Before taking the die out of the chuck, the hole should be *chamfered* back a distance equal to about one third the thickness of the die, as shown at *C* in Fig. 436. The largest diameter of the chamfer should be slightly greater than the diameter of the bolt. It will be understood that the object of chamfering the die is to facilitate starting the thread on the bolt.

After cutting the thread the next operation is to drill the clearance holes lettered *A*. These should not be less than half the diameter of the bolt. The centers for these holes may be located on the diagonal lines previously made, at the intersection of a circle $1^1/_4$ times the diameter of the bolt. This circle will, of course, be drawn from the center of the threaded hole.

To prevent the drill from "running" toward the threaded hole, it is customary among some mechanics to plug the hole with a screw tightly fitting the thread and filed flush with the surface of the die. Others prefer to dispense with the plug and drill small holes first, enlarging same with counterbore. These clearance holes may be drilled in the drill-press.

When this work is done, the die is ready to be filed. For general work, including brass, the front of the cutting-edge may be filed radial, though some prefer to give the cutting-edges *rake*, for wrought iron. For a die having four cutting-edges, the width or thickness of the lands may be about $^3/_{16}$ to $^1/_4$ the diameter of the bolt. The chamfered part

of the die must also be filed to give the *heel clearance.* Great care is required in this work to keep the file from cutting the extreme points of the teeth at the advancing edge. The filing should be begun at the heel and barely brought up to the edge without touching it. Some file or "back off" the heel beyond the chamfered part—that is through the full length or thickness of the die.

The size of the die should be stamped on its face before the die is hardened.

Adjustable Dies.—Adjustable dies are made in a great variety of forms, and the die-stocks differ as much as the dies. Fig. 437 shows one design, in which *S* is the die-stock and *DD* the die in two parts; the adjustment is by means of the screw *A*. Grooves are cut on the edges of the die, as shown in Fig. 438, to fit over the guides *G*. The latter are pivoted in the stock and are swung outward to remove the die. Dies of this construction are usually drilled and tapped larger than the diameter of the bolt they are to cut. Sometimes the drill used is equal to the outside diameter of the bolt, the tap or hob being the diameter of the bolt plus twice the depth of the thread. This gives the thread a full bearing on the bolt when first started and prevents a "drunken" or irregular thread. In using these dies several cuts are sometimes taken to make a full thread, and by tapping the die out large as above indicated, the bearing in the thread and the relative degree of friction are decreased at the time when the hardest work is being done, viz., when the thread is approaching full depth. The adjustment of the die is sufficient to allow the two parts of the die to be separated enough to be quickly withdrawn from the bolt without reversing the die when the end of the thread is reached.

Pratt & Whitney Adjustable Die.—In the die illustrated in Fig. 439, four detachable "chasers" are used, the limit of adjustment being $^1/_{32}$". The chasers are held in a head somewhat similar to that shown in Fig. 440. The latter, however, is designed more particularly for brasswork. The head represented by Fig. 439 may be held in a stock like that shown in Fig. 441. It may also be held in a turret-head.

The Solid Pipe-die differs so little in general construction from the solid bolt-die as to need no description. Pipe-dies are made also in adjustable form.

Retapping Old Dies.—Mr. Geo. J. Meyer in "American Machinist," vol. 26, page 1293, suggests that the retapping of old dies may be facilitated by filling the clearance holes with babbitt. To prevent the babbitt from running into the thread, he plugs the hole. After the

die has been retapped the babbitt is, of course, driven out, a punch being used for this purpose. Mr. Meyer recommends filling up the flutes

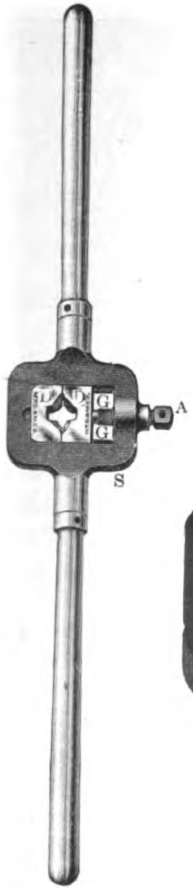

FIG. 437.

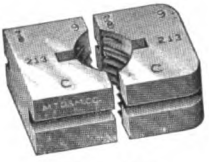

FIG. 438.

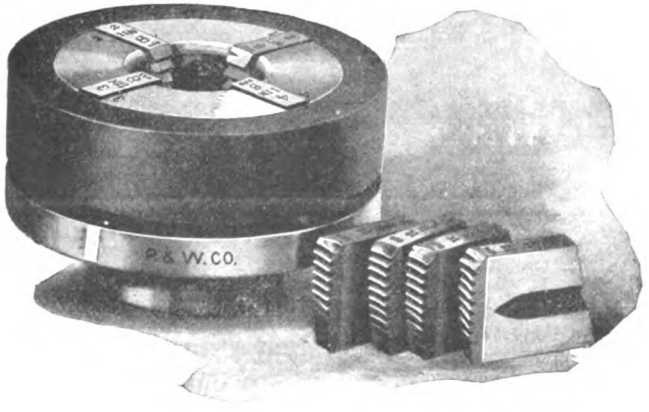

FIG. 439.

of taps also when these are to be recut. The flutes are tinned to make the babbitt adhere.

Making the Taper Tap of the Set of Hand-taps.—The steel used for making taps should be of high grade—such as is recommended by steel manufacturers for this purpose. In order to insure the removal of the decarbonized surface of the metal, stock should be selected of a diameter not less than $^3/_{32}$" larger than the diameter of the tap. In this connection read in Chapter X the paragraph on Hardening Reamers. For

softening the steel some mechanics prefer the "water anneal." This process consists in heating the steel to a *low red*, holding it in a dark

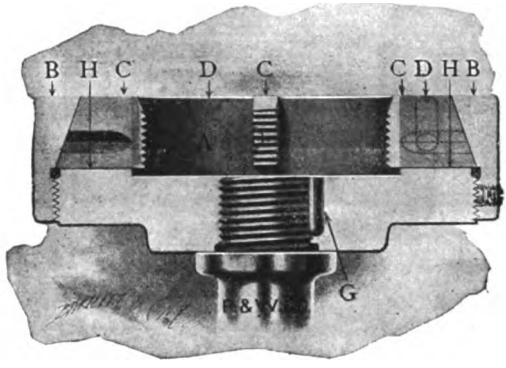

FIG 440.

place until the color leaves the steel, and then plunging it into *soapy* water. Oil is used by some mechanics for the bath. The "water anneal" is preferred to the softer annealing, because when too soft the thread seems

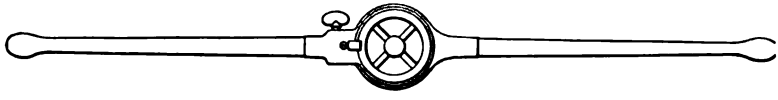

FIG. 441.

inclined to tear, and it is difficult to make the tool cut smoothly. Other mechanics, however, adhere to the slower method of annealing. Mr. E. R. Markham, whose articles on tool-making in machinery have been consulted by the author in connection with this work, heats the tap-blank to a low red, places it between two pieces of board and buries it in a box of ashes. Mr. Markham says respecting this method: "The steel cooled below a red very quickly, but the boards, which were charred from contact with the red-hot steel, kept the piece of steel hot for a long time." He says further, referring to the tap-blank, "It should not remain red-hot any longer than is necessary to insure its not being chilled, yet it should cool very slowly from a point just below red heat. Much of the steel that is annealed is subjected to heats that are too high.

This opens the grain and weakens the steel, and it crumbles off and tears when cut with a threading-tool."

Having annealed the tap-blank, which we shall assume to be of a diameter suitable for a $^3/_4''$ tap, and of a length six times the tap diameter plus about $^1/_{16}''$, the blank should now be centered and its ends faced to $4^1/_2''$ long. Next rough out the blank all over and turn the shank end as shown in Fig. 442. Now mill the ends square for the tap-wrench and

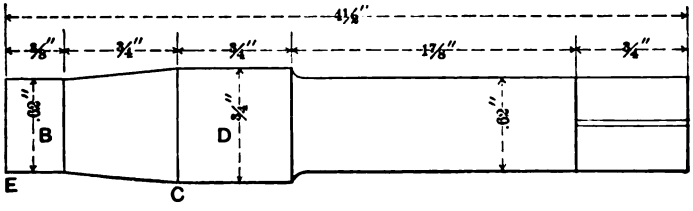

FIG. 442

stamp the size of the tap on the round part of the shank. With a dog on square end of the tap, using brass to avoid marring the end, the part that is to be threaded may next be turned to size.* This is sometimes turned at *D* .001 to .003 inch larger than the nominal diameter, to compensate for the wear on top of the teeth.

Threading the Tap.—The next operation is to cut the thread. It may be cut parallel † at the root and of the same diameter as *B* in the sketch, this being the diameter of a $^3/_4''$ U. S. standard screw at the root of the thread. It should be unnecessary to give in this connection detailed instruction for grinding, setting the thread-tool, etc. What has been said in the chapter on thread-cutting will apply equally well here. Tap-making, however, is a higher grade of work than ordinary thread-cutting, and special care will be required for this work. Good lard-oil should be used, and the finishing cuts should be *very light*. The tap should be gaged by some instrument the measuring-points of which bear on the angular sides of the thread. Either the screw-thread micrometer, Fig. 20, or the thread-gage shown in Fig. 30 will answer.

Small taps are sometimes cut with dies. Several dies are used for each size, the finishing-die taking a very light cut. On the same principle dies are also threaded with several taps or hobs. In either case if the

* Instead of turning the tapering part of the tap (part between *E* and *C*) before the thread is cut, many tool-makers cut the thread first.

† The practice of some manufacturers is to make the three hand-taps parallel and of the same diameter at the root of the thread. Others taper the root of the thread from *E* to *C*, making it smaller at *E* than the root diameter of the screw.

lathe gearing be dispensed with altogether, the lead of tap or die is likely to be slightly too long. Nevertheless the results are satisfactory for most purposes.

Grooving the Tap.—For this purpose a cutter like that represented by Fig. 443, making four grooves as shown in Fig. 444, may be used. The lands may be of the same width as in the die, viz., $^3/_{16}$ to $^1/_4$ the tap diameter, the cutter being fed a depth which will leave this width. Cutters for the above purpose are carried in machinery supply stores.

FIG. 443.

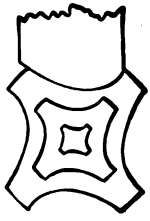

FORM OF TAP
FIG. 444.

Taps are generally grooved in the miller, but if such a machine is not available a simple fixture may be improvised and used on the lathe-rest in connection with a revolving cutter, the latter being driven by an arbor. The fixture may be constructed as follows: make a casting with two standards or lugs,* and a center in each lug. One of these lugs could be made adjustable longitudinally in a slot, and the center in this lug could be threaded for lengthwise adjustment. The other center should be so arranged as to admit of being rotated, and should carry a small face-plate having a slot for the tail of the dog. Four or more notches equally spaced around the periphery of the plate and a spring pawl to engage these notches complete this pair of centers.

Backing Off the Tap.—The tapered part of the tap-lands must be backed off or filed for the same reason that the chamfered part of the die was filed, and with the same precaution respecting the cutting-edges. The amount of this clearance must be determined by observation and good judgment. To remove any roughness left by the cutter, the face of the cutting-edge and back face of the land should be smoothed with emery-wheel or file.

Relieving the Tap.—Taps, especially taper taps, cut much more easily when relieved or given clearance between the teeth. A three-cornered or half-round file may be used for this work. Here again care must be exercised to protect the cutting-edges. Some workmen object to this clearance on the ground that it causes chips to wedge between the teeth when the tap is reversed.

* If the fixture be bolted on top of the rest, one end of the casting may need a downward offset for clearance of dog.

Relieving Taps by Etching-fluid.—Taps of abrupt taper do not cut freely, because the threads are greater in diameter at the heel of the land than at the cutting-edge. The threads may be relieved by etching-fluid in the same manner that steel tools are marked.

Tempering Taps and Dies.—The paragraph on hardening reamers referred to above will apply to taps and dies. Additional care, however, may be necessary to protect the points of the tap-teeth. The cutting parts of both tap and die may be drawn to a straw color, but the die will be stronger if the outside edges are somewhat softer. To insure free circulation of water between the cutting-edges, move the die back and forth in the bath.

After hardening the tap, it may be polished on a buffing-wheel or with emery-cloth. The inexperienced workman is cautioned against rounding the points of the teeth and spoiling the tap in this operation. It is scarcely necessary to polish the die.

The plug and bottoming taps need differ from the taper tap only in the turning, the threading being the same. However, to avoid tapping a hole *slightly* larger at the entrance end, plug and bottoming taps are sometimes made to taper smaller towards the shank. When this expedient is used, the amount of the taper should be so little as to be scarcely appreciable. A fraction of a thousandth of an inch smaller will be quite sufficient.

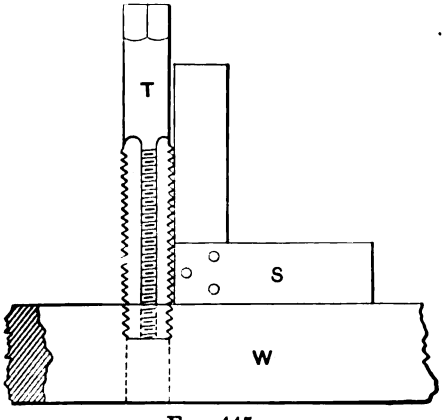

FIG. 445.

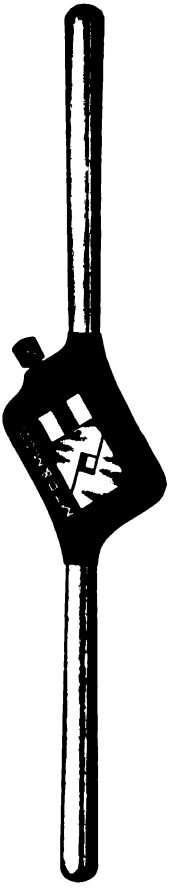

FIG. 446.

Tapping Holes. The Tap-lever.—In tapping holes beginners will depend on the hole to guide the tap, but this is generally disappointing, as *the tap will not always follow square.* The proper way is to apply a square to the tap as soon as it takes hold; if the tap incline to the left apply pressure on the right side. It is generally necessary to test the tap several times before it is properly started. Fig. 445 shows a method of starting a tap and applying the square. *Great care is required in using small taps*, as they are apt to snap off, especially when applying greater pressure on one side to square the tap.

In tapping steel, wrought iron, etc., it is usually necessary for every one half to three fourths revolution, to rotate the tap backward a fraction of a revolution in order to dislodge the chips. This is sometimes advantageous also in tapping cast iron. Tool steel can best be tapped with a mixture of lard-oil and graphite.

The tap-lever may be of some adjustable form, as that shown in Fig. 446, for instance; or a simple lever with a square hole in the center may be used. Adjustable levers for taps and reamers are made in many designs. The one shown is so simple that no explanation will be necessary.

Threading Large Work.—It is sometimes necessary to thread some special casting in which the hole is too large for any tap on hand, while

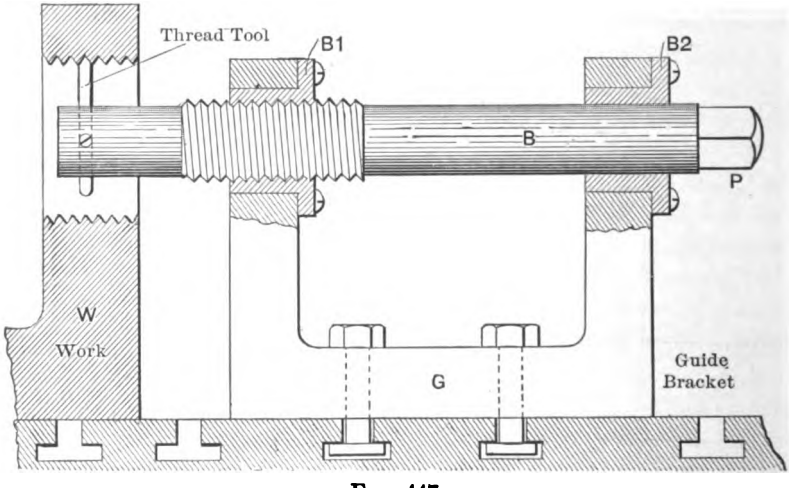

FIG. 447.

the casting is too large to be threaded in any available lathe. Fig. 447 illustrates a case of this kind. The work is bolted to a planer-bed and a *special boring bar B*, supported in a guide bracket *G*, is used—first to

finish the hole, and next to cut the thread as shown. The *bushing B* 1 may be made with *fine thread* for *feeding* the bar when boring out the hole, and one with the required thread must be made for threading the hole. Bushing *B* 2 requires no thread. Having adjusted the guide bracket and cutters in the bar to the work, the *bar is turned by a wrench* on the square end *P*. If much of this work is required the bar *could be operated by power*. When the bar is turned the thread on *B* forces the bar to advance a distance equal to the lead of its thread for each revolution. Several cuts are required to complete the thread.

Tables of tap-drill sizes are given on pages 531 to 533.

BOLT-CUTTING AND NUT-TAPPING MACHINES

Bolt-cutter.—The machine shown in Fig. 448 is one of the smallest and simplest bolt-cutters supplied by the makers. The bolt is held

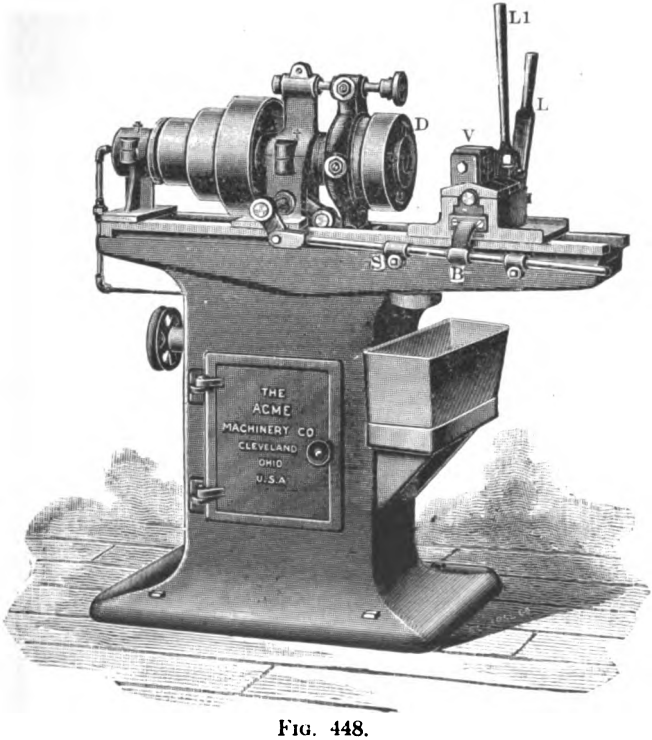

FIG. 448.

in the vise *V*, being clamped by the lever *L*. The carriage carrying the vise is fed to the die *D* by the lever *L* 1. By the contact of the

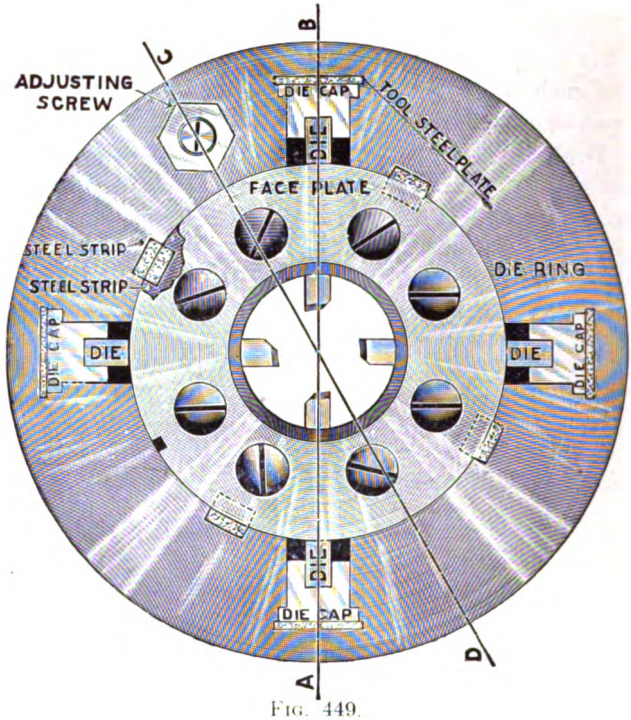

FIG. 449.

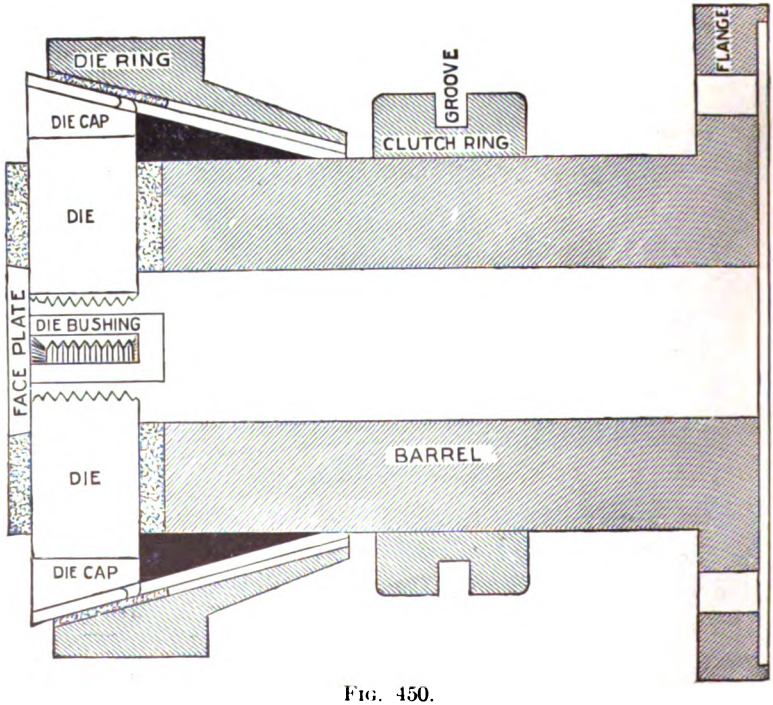

FIG. 450.

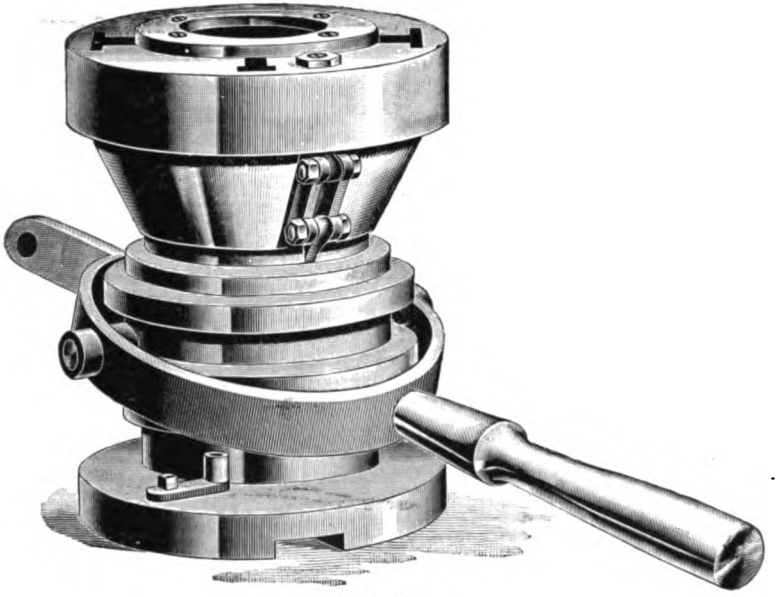

FIG. 451.

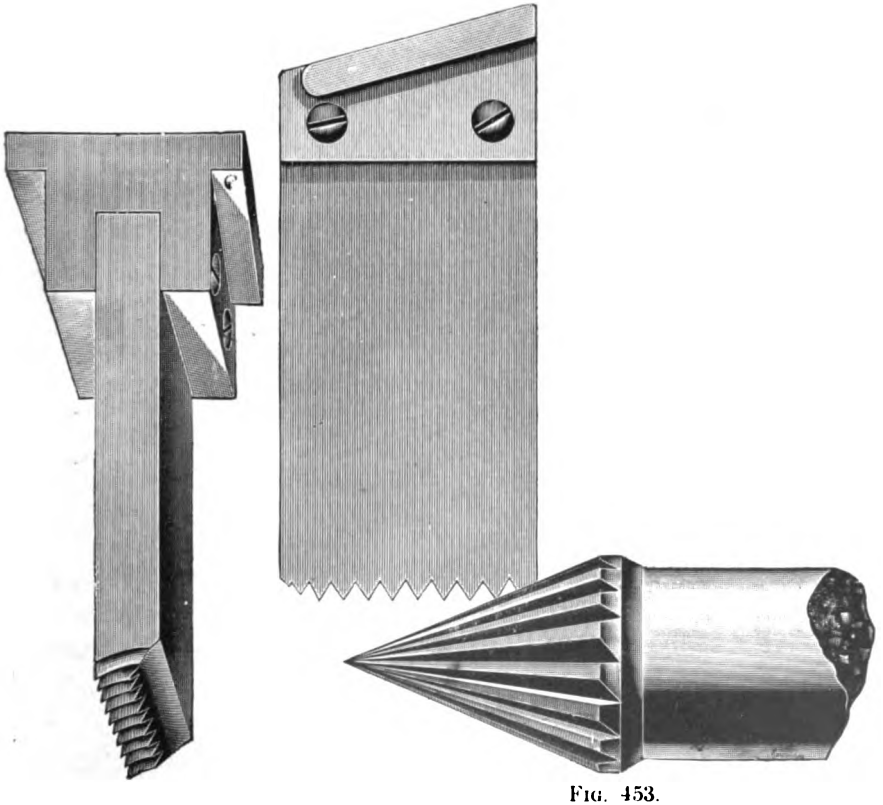

FIG. 453.

bracket *B* with the adjustable stop *S* the die is automatically opened to release the bolt when the thread is cut the required length. The carriage is then quickly withdrawn while the die-head continues to run in the forward direction. The multiple-spindle machines are more elaborate and turn out a great quantity of work.

Die-head.—One of the most important features of these machines is the die-head. The front view of this head is illustrated in Fig. 449, the sectional view being shown in Fig. 450. Fig. 451 shows a perspective

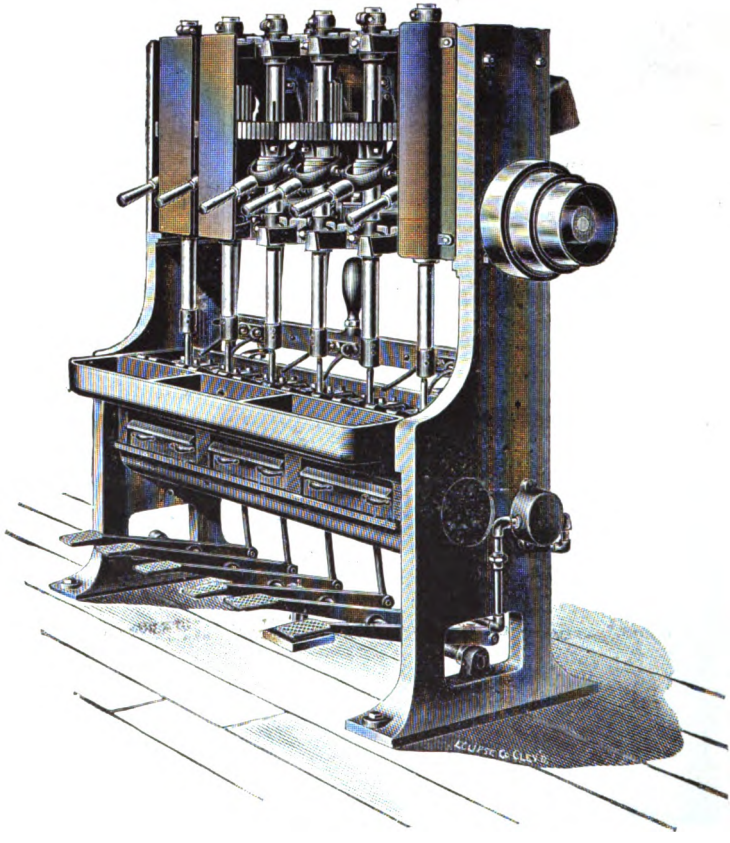

FIG. 454

view. The names of the various parts are given in connection with the first two illustrations. As will be seen, the die-chasers are guided in radial slots at the front end of the head. The movement of the chasers

in and out is controlled by the die-ring. The latter is in turn operated by the clutch-ring, to which it is connected by a rocking lever and toggle. Most or all of the sliding surfaces are tool steel or have tool-steel linings.

One of the chasers is shown in detail in Figs. 452 and 453, the latter figure showing also a reamer to indicate how the dies are chamfered.

Six-spindle Nut-tapper (Fig. 454).—In this machine, the taps are connected to the lower end of the spindles, the nuts being held under the taps in adjustable holders. Each spindle is lifted by either a lever or a treadle as indicated. "The spindles are counterbalanced to prevent breaking the taps," and each spindle may be stopped independently of the others. The taps can be removed while the machine is in operation. The lubricant is automatically pumped to the tap.

THE NEW YORK
PUBLIC LIBRARY
ASTOR LENOX AND
TILDEN FOUNDATIONS

CHAPTER XX

THE BORING-BAR AND ITS USE

Definition and Classification of Boring-bars.—A boring-bar is a bar of metal bearing one or more cutters for enlarging and correcting holes. Boring-bars may be classified as follows: first, the plain bar with cutter directly secured to same (Fig. 455); second, the bar having a fixed

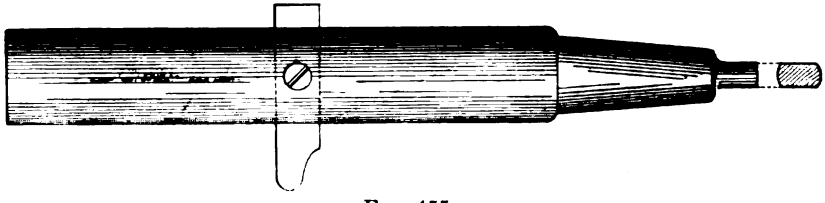

FIG. 455.

cutter-head with cutters secured to the head (Fig. 456); third, the sliding-head bar, the head of which is adapted to be fed along by a screw and

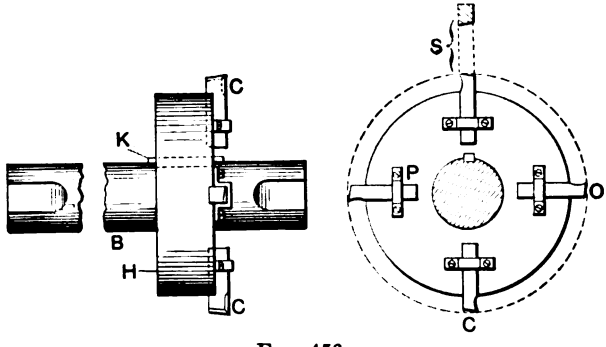

FIG. 456.

star-shaped wheel, as in Fig. 457. This feeding device is called the *star feed.*

Securing the Cutters in the Bars.—There are various methods for securing the cutters in the bars. The cutter represented by Fig. 455 is of

rectangular cross-section, and is held in a rectangular slot in the bar by means of a set-screw; the rectangular slot shown in Fig. 458 is made

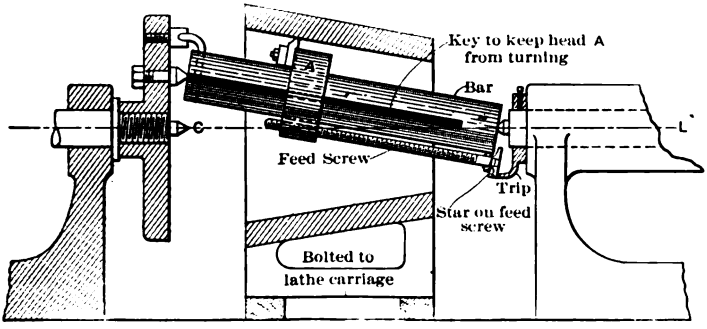

FIG. 457.

longer than the width of the cutter in order to receive a key which secures the cutter to the bar; the cutter illustrated in Fig. 459 is held by a threaded collar which screws on the bar.

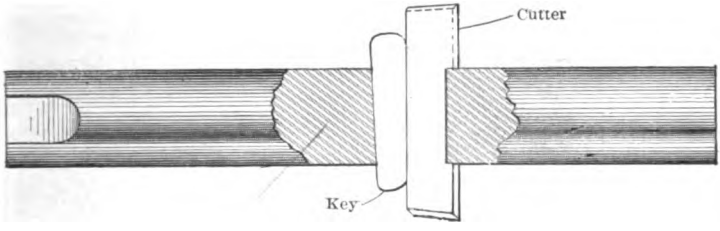

FIG. 458.

Boring a Steam-engine Cylinder.—As indicated in the definition, a boring-bar is never used to originate a hole, but *always to enlarge a hole.* As will be presently shown, the boring-bar is used in various ways. A clear conception of the boring-bar may be had by the consideration of one of its most common uses, viz., that of boring steam-engine cylinders. In boring a single cylinder in the lathe, the cylinder is generally secured to the lathe-carriage by common machine-shop bolts and straps, the cylinder being raised to the correct height by blocks, wedges, etc. If a large number of cylinders are to be bored a special fixture is made to support the cylinders on the lathe-carriage. To adjust the cylinder in alinement with the lathe-spindle a testing-rod is commonly used in connection with the boring-bar, though some mechanics prefer to aline the cylinder by calipering from the cylinder-flange to the bar. Fig. 460 shows a

cylinder bolted to a lathe-carriage and illustrates the method of using the testing-rod. The latter, which is shown at *R*, may be made of

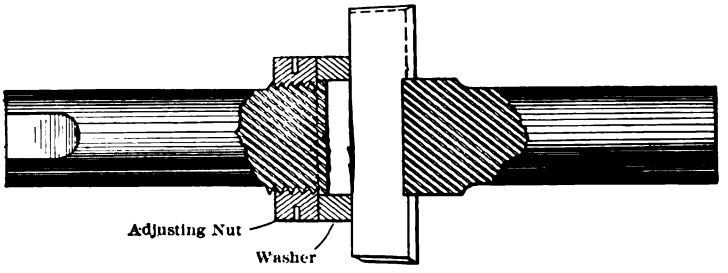

FIG. 459.

$\frac{1}{4}$" round or square steel and held in the slot of the bar by a wooden wedge.

To test the alinement of the cylinder, the boring-bar is slowly revolved on the lathe-centers by hand (or the lathe, driving the bar by a dog or

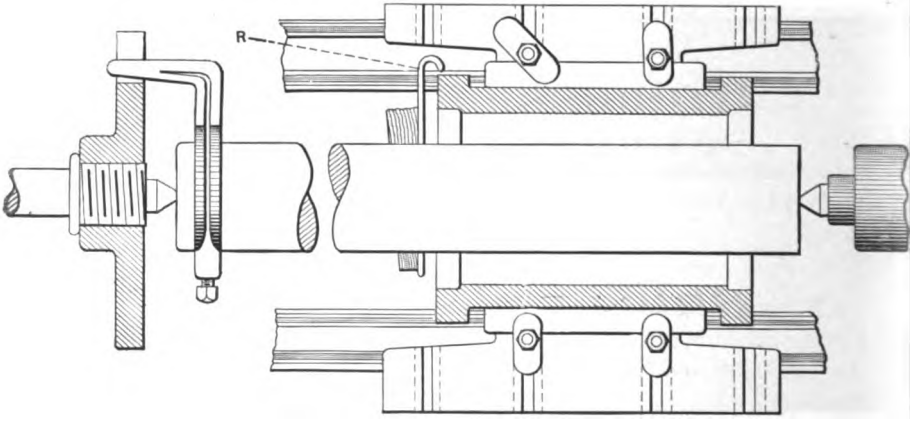

METHOD OF ADJUSTING A CYLINDER

FIG. 460.

rod, is slowly revolved) and the position of the cylinder in relation to the revolving rod noted. If the point of the testing-rod does not clear the cylinder by the same amount at three of four points around the cylinder-flange, the bolts are slackened and the cylinder is moved in the direction indicated by the revolving rod, this process being continued for each end of the cylinder until it is found to be in alinement with the bar. If now the tail-stock of the lathe be axially true with the

lathe-spindle, the cylinder will also be in alinement with the lathe-spindle as required.

When the adjusting and clamping is completed the cylinder may be bored by feeding the carriage bearing the cylinder toward the revolving cutters; or, if a sliding-head bar be used, the carriage is held stationary and the head while revolving is fed through the cylinder. It will require at least two cuts. The first cut rough-bores the cylinder; the second cut, which requires cutters having broader edges, smooths the bore and brings it to the final diameter.

A method of "truing-up" cylinders by the end flanges has been referred to; if a cylinder has not these flanges, the method of adjustment must be determined to suit the design of the cylinder. Further instructions respecting fixtures for holding and adjusting cylinders are given in connection with Figs. 480 and 481. When one of these special fixtures is used very little adjusting is necessary.

Single and Double Cutters Compared.—The number of cutters in a boring-bar varies with the size of the bar. There may be one or a dozen, or even two dozen for very large bores. When a single cutter is used it may be made with one or two cutting-edges. If made with one cutting-edge it cuts on only one side of the bar. In this case the cutter is unsupported on the opposite side of the bar, except in so far as it is supported by the bar itself. In very small holes the bar is quite frail and does not adequately support the pressure of the cut; the single cutter is, therefore, not well adapted to long holes of small diameter. In using the cutter which has cutting-edges on both ends, the cut on one side of the bar is supported by a corresponding cut on the opposite side, and thus the bar is under a torsional stress only. If a cutter with one cutting-edge be used, the bar will be subjected to both torsion and flexure.

A single cutter has the advantage that it may be adjusted for different sizes of holes, while the double cutter, as originally made, may be used for one size only. However, the double cutter may be made in two parts, as illustrated in Fig. 461. With this construction we have the advantages of both the single and double cutter, excepting that the double cutter is not self-adjusting, as it is represented in Fig. 458. The above refers to the plain bar.

Fixed-head Bar.—The second boring-bar mentioned in the classification is in principle similar to the first; that is to say, the cutters are held in a fixed position respecting the bar. The head is used on the bar merely to provide for boring large holes without enlarging the bar

throughout its length. The head may be secured to the bar by means of a common key as shown in Fig. 456, in which H is the head, B the bar, K the key, and C the cutters, or the head may be held by set-screws.

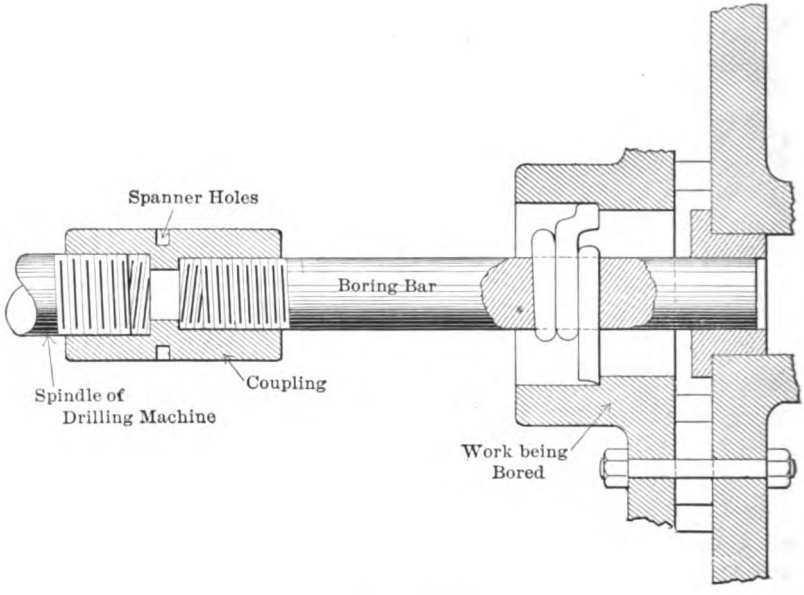

FIG. 461.

This figure shows also one method of holding the cutters, but some prefer to hold them by set-screws.

The design shown in Fig. 462, in which round cutters are used, suggests itself in this connection. The illustration is a sectional view of a cutter-head held on the bar by two set-screws. Two methods of holding and adjusting the cutters by set-screws are shown. The cutter at C 1 is adjusted by a small rod in connection with the screw S, which engages directly with the end of the cutter. The cutter C 2 is forced out by contact of the conical point of the screw S 1 with the beveled end of the cutter. It will, of course, be understood that the two methods of adjusting the cutters are not to be used in the same head.

A cutter-head might be made of such a design that all the cutters could be forced out simultaneously. Thus the beveled edges of the cutters could be seated on the beveled edge of a ring, the ring being forced against the cutters by a nut screwed on the bar.

The holes or slots for the cutters should in nearly all cases be made

to fit bar stock, or so nearly to bar-stock size that a few touches of the file will reduce the rough stock to the size of the holes.

When round cutters are used a flat seat should be filed on the side of each cutter to receive the set-screw which binds it. Cutters should

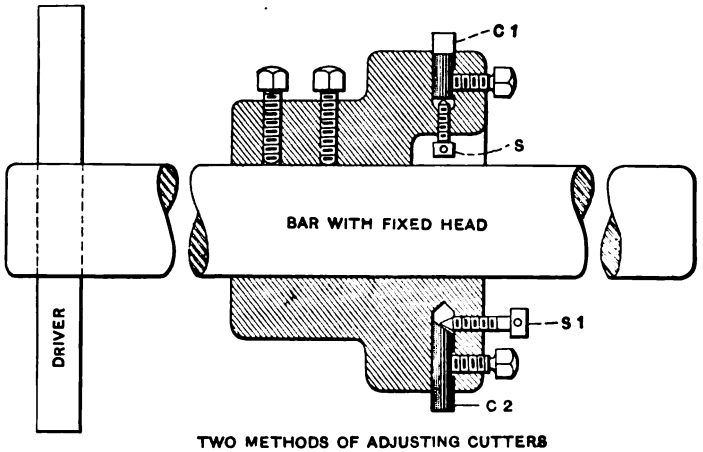

TWO METHODS OF ADJUSTING CUTTERS

FIG. 462.

be of square or rectangular cross-section, however, when they are adjusted by a wedge.

The enlarged collar, which we have called the cutter-head, is sometimes made integral with the bar; but this arrangement is disadvantageous when we wish to use one bar for different sizes of heads.

The Sliding-head Bar.—The third bar mentioned in the classification is a radical departure from the other two designs. It is shown in Fig. 457. We have called this the sliding-head bar because, instead of being fixed to the bar, the head slides lengthwise the bar by automatic mechanism. This mechanism consists of the long screw lengthwise the bar which engages with a threaded hole in the head. On the tail-stock end of the bar is a small lug which serves as the bearing for the screw and also sustains the end thrust of the screw. At the same end of the bar and on the extreme end of the screw is a small star-shaped device (marked Star) the points of which, when the bar revolves, engage with a fixed projection on the tail-stock. The effect of this arrangement is to cause an intermittently revolving movement of the screw, which in turn causes a lengthwise movement of the head. The head is prevented from revolving on the bar by means of a feather-key the full length of the bar, which key engages with a corresponding keyway in the

head. The head, of course, has the motion due to the revolutions of the bar, excepting some special cases in which the work instead of the bar revolves.

It is not essential to the successful operation of the bar *that the star device be placed on the tail-stock end* of the machine, nor is the shape or position of the trip that revolves the star device of any special importance. A small rod clamped to the shears of the lathe will serve the purpose of the trip as well as the more convenient device shown in the sketch. A better design of sliding-head bar has a continuous rather than intermittent feed. This makes a more expensive device, but it does better work. In the illustration we show the bar arranged for boring a tapering hole, but the description applies equally well when boring a parallel hole.

The sliding-head bar, while more expensive in construction than either of the other bars, has one important advantage. If required to bore a long hole, or indeed any hole, with the fixed-head bar, the bar must be at least twice the length of the bore; if the sliding-head bar be used, the bar need be only the length of the bore plus a small addition for clearance. This is a very important consideration; for if the work be as long as our longest lathe will admit, the bar with fixed head can not be used.

Considerations Governing the Number of Cutters.—The single and double cutters described above are used mainly in small bores; when the hole is large enough to use a fixed-head bar or a sliding-head bar, we then generally use two or more cutters. We use a number of cutters, not because two, or even one, would be impracticable, but because a larger number of cutters is more economical for a large hole. If we have to bore cylinders 3′ in diameter, the work done by each cutter will be about proportional to the number of cutters; and if one cutter be used, it may wear so much as to require nearly twice as long to do the work as compared with, say, a dozen cutters. On the other hand, the first cost of the cutter-head will be greater for the larger number of cutters. We would rarely attempt, however, to bore so large a cylinder with one or two cutters, and if we had a number of such cylinders to bore, the final saving would be more than sufficient to pay for the extra expense in cutter-head and cutters.

Methods of Driving Boring-bar in Lathe and in Boring-machine.—We have already briefly referred to the method of driving boring-bars in the lathe. It may be added that any kind of clamp, rod, stud, or lathe-dog secured to the end of the bar and engaging with the face-plate of

the lathe, or a s
well, however,
have the bar dri
by having a rod p
in contact with tw
shall thus get a bala
its center.

In the drilling-mach
narily driven by a key,
coupling. In the first ca
a corresponding taper in t
is held by a key passing throu
bar. In the second case also, th
tapering hole in spindle, but instea
held by its flattened end or tang fitting
of the tapering hole in spindle. This ba

The third method is illustrated in Fig.
a threaded coupling or sleeve, one end of which
spindle and the other end onto the threaded end of th
plate shows also a means of securing work and the a
guiding the end of the boring-bar. The method illustrated
is not well adapted to large bars, the other two methods bei
for this purpose.

In boring a large hole with a radial drilling-machine the lathe m
of driving a boring-bar is sometimes employed. For this purpose we
the sliding-head bar, which must be supported on centers, the same as i
the lathe. One of these centers is held in the tapering hole of the drill-spindle; the other may be held directly in the base-plate of the machine, or in a supplementary plate made for the purpose. Any bar other than the sliding-head bar cannot be used in this way in the drilling-machine.

Feeding Methods Used in Connection with Boring-bars.—In describing the boring-bar in general it has been necessary to mention some of the ways of effecting the feed, and the star feed has been described in detail. We shall now describe other methods. The means ordinarily used in the lathe is the common feed gearing which moves the carriage. In this case the work is generally, though not invariably, fastened to the carriage and travels with the carriage, and the bar with fixed cutters is used. The carriage-feed is used also in a case like that illustrated in Fig. 463. In this sketch the work is shown clamped to the face-plate of the lathe, and a modified form of sliding head is used, but neither the

head nor the bar revolves. A key may be used to keep the head from turning, and the bar may be held by a rod passing through its right end.

The star feed is not used in connection with this head, the feed of the head being effected by means which will now be described. The

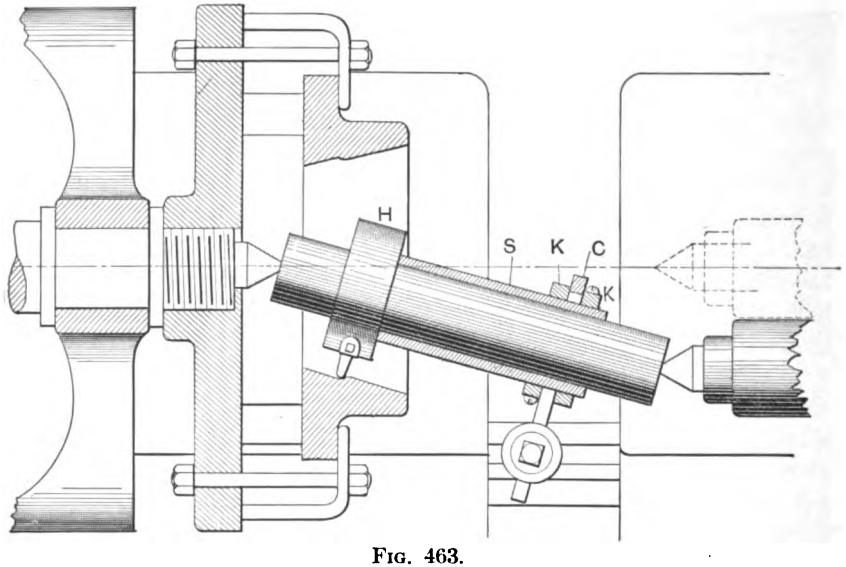

FIG. 463.

sleeve S screws into the head H, and with the head slides freely on the bar. Two slip collars lettered K are secured on the sleeve S; the yoke C fits between these collars and has a U-shaped opening through which the sleeve passes. As the carriage moves, the yoke, being held in the tool-post in the ordinary manner, engages with one of the slip collars and thus the head H is fed lengthwise of the bar. This sketch, which represents a horizontal section through the work and lathe face-plate, shows an arrangement for boring a tapering hole, but the same mechanism could be used in boring a parallel hole. For this purpose it would be necessary to move the tail-stock, which is shown set off, to its normal position.

When boring in the *radial drill* and *horizontal boring machine*, the bar is generally fed to the work. The feeding mechanism used for this purpose is nearly similar to that used in the lathe, and it is more particularly described in connection with descriptions of the machines mentioned.

Feeding Laterally with Star Feed.—As used in boring, the star feed has been sufficiently described; it is only necessary to refer to its use in

lateral feeding. This is clearly illustrated in Fig. 464, which shows a bar and cutter-head arranged for facing the flanges of an engine cylinder. Instead of the head having direct connection with the bar, it slides in a dove-tail groove planed in the face of an arm projecting from the bar. Passing through the head is the screw with star fastened on its extreme

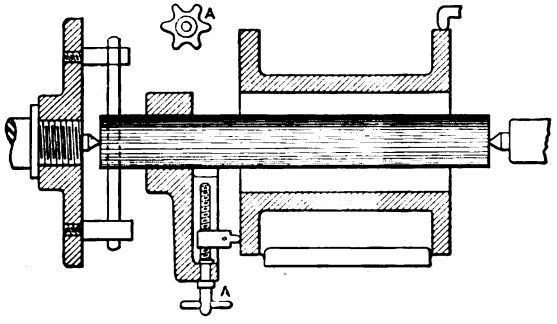

FIG. 464.

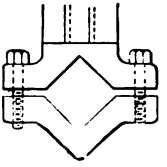

FIG. 465.

end. As the bar revolves the star engages with some fixed projection, which gives an intermittently revolving motion to the screw, and thus feeds the head bearing the cutter radially to or from the bar.

The part here referred to as the head is sometimes called the tool-block; when thus designated, the arm and tool-block together constitute the head. This arm is generally bored out to fit the bar, and is held fast to the latter by a key or by set-screws. Some prefer to make the arm with a square rather than with a round hole, and have it parted through the center of the hole as shown in Fig. 465. This not only admits of the arm being easily detached from the bar, but also makes it adjustable, within certain limits, to different sizes of bars. The arm which has a round hole should also be made to part through the center of the hole.

The sketch in Fig. 464 shows an engine-cylinder which is assumed to be clamped to the carriage of the lathe, and to have been bored out by either a fixed-head bar or a sliding-head bar. The cutter-head which has just been described is used for machining the flanges of the cylinder. Having machined the faces of the cylinder-flanges, the cutter shown in the tool-block is removed and a cutter similar to that shown on the opposite end of the cylinder is used for turning the edges of the flanges. When turning these edges the trip that operates the star feed is dispensed with, and the feed is effected by the movement of the lathe-carriage, as previ-

ously described. The cutter-head must, of course, be moved to the other end of the bar for machining the opposite end of the cylinder.

Boring Tapering Holes with Boring-bar.—When boring a tapering hole with the boring-bar it is necessary to have the bar arranged at an angle to the axis of the bore. Fig. 457 illustrates one of the methods used. This view shows a vertical section through face-plate of lathe and work, the latter being secured to the lathe-carriage. The bar is supported at the tail-stock end in the ordinary manner, but at the head-stock end it is supported by an auxiliary center held in the face-plate. The distance between this auxiliary center and the center of the lathe-spindle is determined by the taper of the hole to be bored. In boring a tapering hole with work clamped to carriage as shown in this plate, the sliding-head bar is the right bar to use. Means of feeding the cutters of this bar have already been described. It is sufficient to observe that in this particular case, the cutter or cutters must be on one side of the bar only. Any cutters that might be placed opposite to the one shown would have no contact with the work, and would, therefore, be inoperative.

A tapering hole may be made with a boring-bar by *angling* the bar at the tail-stock end of the lathe; but in this case both lathe-centers are used in their normal position, the angularity of the bar being effected by securing an arm to the bar and making a work-center in this arm. In this method, as well as in the first method described for boring tapering holes with the bar, the work is supposed to be clamped to the lathe-carriage, the latter being held in a stationary position, and the feed effected by movement of the sliding head. As in the previous cases, the taper of the hole is determined by the distance between the normal center in the bar and the new work-center in the arm.

Under the head of Feeding Methods, an arrangement for boring tapering holes with the boring-bar and with work clamped to the face-plate has already been described. This arrangement is illustrated in Fig. 463. It will be unnecessary to further describe this method, but the student should observe that in this case the taper is effected by *setting off the tail-stock.*

In Fig. 466 * is shown a cutter-head with which a tapering hole may be bored without offsetting the tail-stock. In this case the head itself is tapering, and a dovetailed tool-block, sliding in a similarly shaped groove, carries the tool. The latter is fed by the star-feed mechanism. The bar, which is shown broken off at both ends, is carried on the lathe-

* Cut taken from an article in "American Machinist," vol. 27, page 529.

centers in line with the lathe-spindle, and is driven by a lathe-dog or otherwise. The head does not slide on the bar, being tightly secured to the latter.

Reboring Engine-cylinders Without Removing Same from Engine.—In repairing an old engine, it is sometimes cheaper to rebore the cylinder

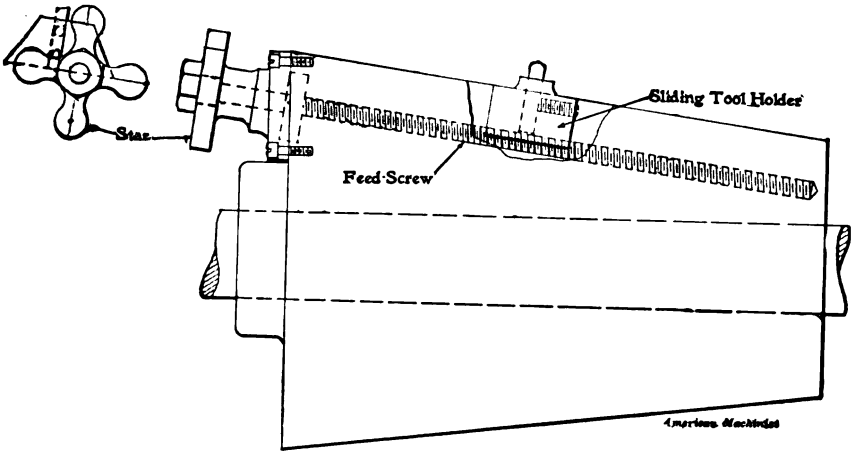

FIG. 466.

in its place than to take it to the shop. Manufacturers of machine tools furnish an elaborate apparatus for this purpose; but a satisfactory device may be improvised as follows: Remove the piston, one or both cylinder-heads, and sometimes the guides from the engine, and adjust a sliding-head bar in the cylinder, concentric with the *counterbore*. One end of this bar may be held in the stuffing-box—a bushing being used if necessary—the other end being supported by a guide bolted across the end of the cylinder by means of the studs.

The reason we adjust the bar by the counterbore is that this part of the cylinder, being beyond the travel of the piston, and larger in diameter than the normal bore of the cylinder, cannot wear out of true. When thus bored, the *original alinement* of the cylinder will be preserved, which is essential to the smooth working of the engine.

The bar may be operated by hand in connection with crank and gearing, or, if convenient to any revolving shaft, it may be operated by power. It would be necessary to support the end thrust of the cut by means of a shoulder or slip-collar on the bar. In the more elaborate apparatus mentioned above, the means for supporting the bar and the arrangement for holding the cutters admit of adjustment to various

sizes of cylinders. The gearing is also more complicated, a continuous feed being used instead of the intermittent. In some designs there is provision for more than one rate of feed, but this can also be effected in the star-feed device by using one or more trips.

Precautions Necessary in Smooth-boring. Causes of Chattering.—To insure smooth-boring the boring-bar should be as short and as rigid as practicable, and the cutters should be held rigidly in the bar. If the feed be effected by the movement of the carriage, there should be no unnecessary *looseness* in the adjustment in the carriage-gibs. If the sliding-head bar be used the head should fit the bar, and the feather or key which prevents the head from turning on the bar should be as close a fit as practicable.

The instructions which have been given respecting rates of feed in Chapter XI will apply to boring-bar work.

For taking a finishing cut the cutter should generally have a broad bearing in the bore and be fed faster than when taking the roughing cut. But when the broad bearing of the cutter causes *chattering*, as it sometimes does when a slender bar is used, it may be necessary to reduce the bearing.

One of the principal causes of chattering is too much heel clearance in the cutter. This should be thoroughly understood. Failing to appreciate this, and giving the cutter too much heel clearance, will result not only in rough work but in noisy operation. The heel clearance should never be more than sufficient for smooth-cutting. Reducing the heel clearance will sometimes enable us to increase the breadth of cutter contact and rate of feed.

Shapes of Cutters.—Fig. 467 is a diagram showing cutters placed at various angles with respect to radial lines through the axis of the boring-bar. This figure also shows respectively at (1) and (2) the face views of roughing and finishing cutters, and at (3) a form of cutter sometimes used when the slots in the cutter-head are parallel with the axis rather than at right angles. No. 1 is about right for finishing cuts also in such metals as wrought iron and steel. It will be seen that the distance between the heel of each cutter and the circle is very small, and that the curve of the heel is eccentric. Sometimes cutters are made with no clearance at this point, or only so much as may be given with an oil-stone. Such cutters cut on the advancing end or corner, at which points they must have clearance. The corner of the cutters should be well rounded, as shown at *A*. To get the best results, especially with cutters which have little or no peripheral clearance, the cutter after being fitted to the head or to the bar should be turned in the lathe.

The cutter at *C*, if well fitted and supported in a heavy bar, will cut wrought iron or steel very well. Under similar circumstances it will also cut cast iron, although it is not usually considered necessary to have so much rake for this metal. But, if the bar be of small diameter in proportion to its length, or the cutters project far beyond their sup-

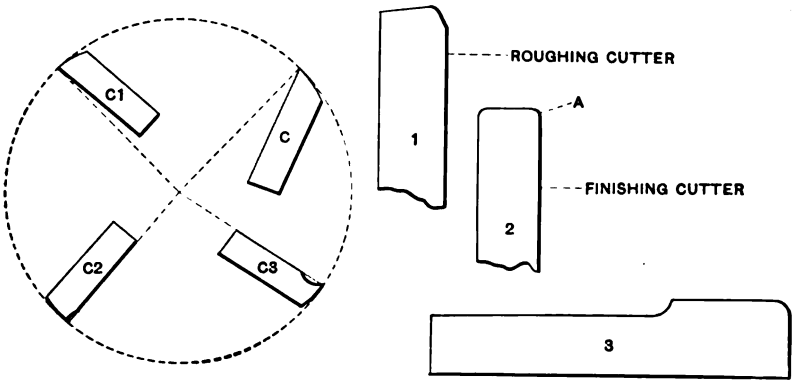

FIG. 467.

port, cutters placed as at *C* would be likely to cause jar and chatter. Under the unfavorable conditions referred to, and indeed under average conditions, the cutter is likely to do smoother work when made with little rake, as at *C* 1, or with no rake. In boring brass, and in some cases of boring cast iron when it seems difficult to overcome the chatter in any other way, the tool may be given negative rake, as in *C* 2.

The causes of chattering are various, and only the leading causes have been mentioned. Sometimes the difficulty may be overcome by placing a piece of *leather* or *waste* between the tail of the dog and the face-plate or stud by which it is driven.

The wear of the boring-bar centers may, by causing looseness of the boring-bar between the lathe centers, cause chattering. Boring-bar centers should therefore have ample bearing. Large cast-iron boring-bars should be made with steel plugs for the centers and oil-holes should be provided for oiling the center without loosening the tail-spindle.

Boring-bar cutters should be tempered about the same as other lathe-tools.

CHAPTER XXI

HORIZONTAL BORING- AND DRILLING-MACHINES AND WORK. CRANK-BORING MACHINE

Description of Typical Machines.—The horizontal boring-machine shown in Fig. 468 is designed mainly to enlarge and finish holes, as, for example, the boring of bracket-boxes, pillow-blocks, etc. It will also drill holes from the solid. The bed *B*, head-stock *H*, table-support *T* 1, and yoke *Y* comprise the main framework of the machine. The spindle *S* is driven by pulley *P* and back-gearing *G* as in a lathe. It is fed lengthwise by cone pulleys *P* 2 and other mechanism not shown in the cut. The hand-wheel *H* 1 gives the hand-feed. The table *T* is adjusted crosswise and lengthwise by the shaft *S* 2 and crank *H* 2. The vertical movement is effected by means of gearing and shafts *S* 3 and *S* 4, which operate the screws *S* 1 and *S* 5. The power for this purpose is applied by a hand-crank. The longitudinal movement of the table is 26″. The traverse of the spindle in a machine of this (medium) size is sufficient to bore a hole 20″ long.

The work is bolted to the table *T*, and is adjusted in line with *S* by the movement of the table as described. The boring-bar is then placed in position in the yoke and secured to the spindle by a key, one end of the bar being shaped to fit the hole in end of spindle *S*. (In some work the spindle *S* is used as a boring-bar.) The cutters in the bar are next adjusted and the bar fed through the work by the feed mechanism above described.

This is a very convenient machine for boring cylinders, hangers, small framework, etc. By using a suitable attachment for guiding the end of the bar much of the work done on this machine could be done on a radial drill, though not so conveniently and quickly.

Fig. 469 shows the "Binsse" machine of this class. It will be seen that the cone pulley is not placed on the main spindle in this machine. The speed changes are made by a lever *L* shown behind the large driving-gear. A motion to the left gives the quick-speed series, a

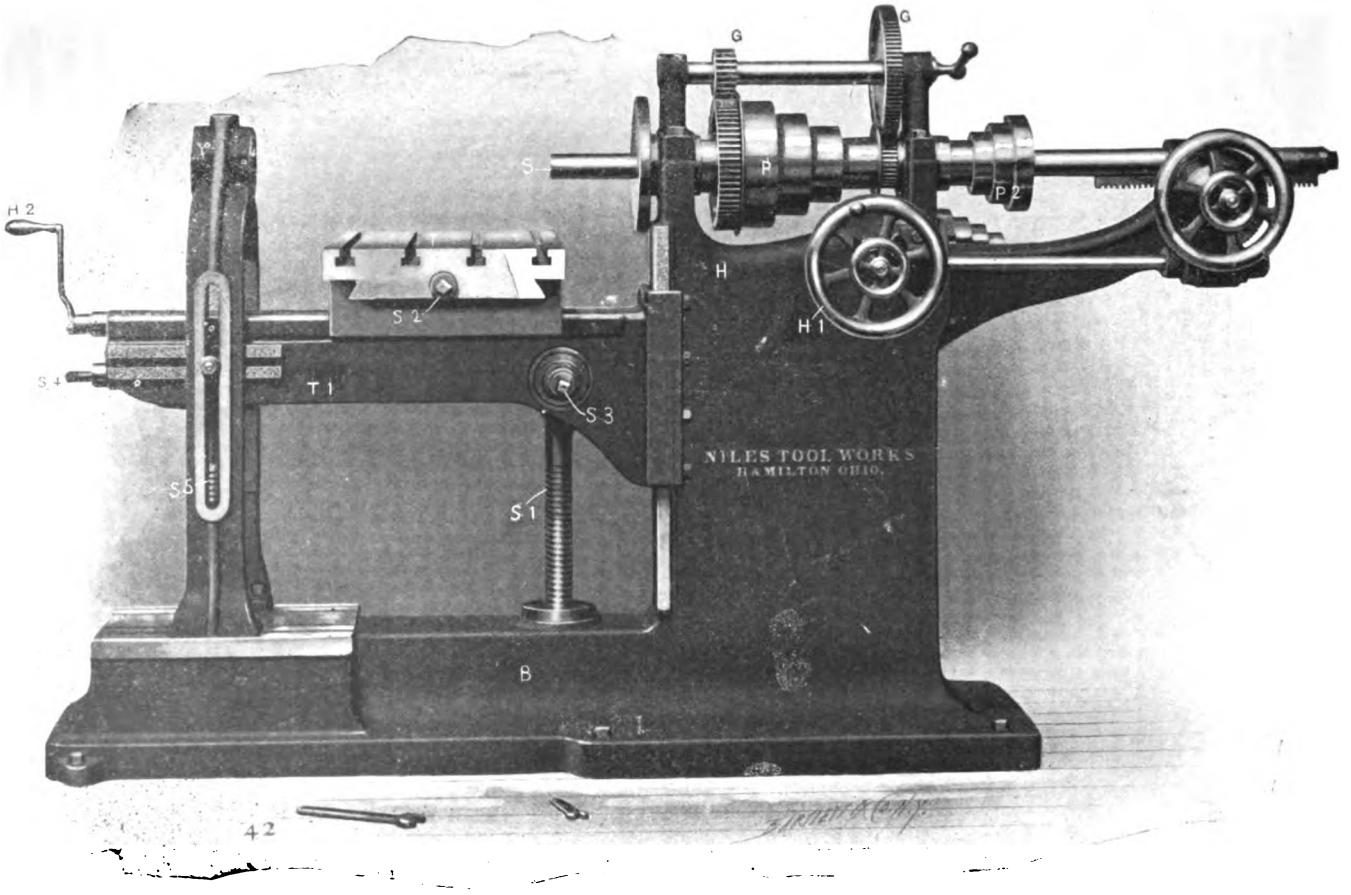
G
G
S
P
P2
H
H1
H2
S2
S4
T1
S3
S5
S1
B
NILES TOOL WORKS
HAMILTON OHIO.
42

Fig. 468.

contrary movement engages the slow or back-gear speeds, and the intermediate position of the lever stops the rotation of the bar.

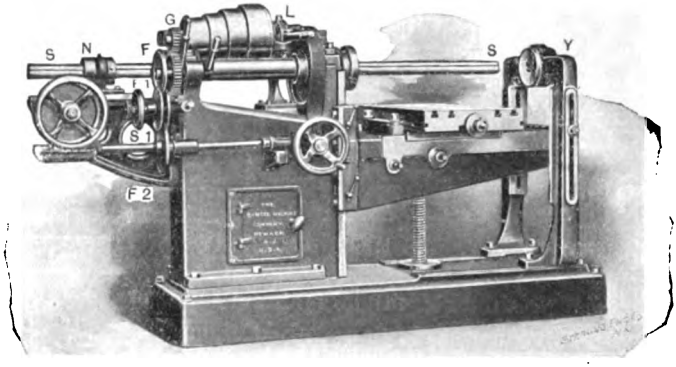

FIG. 469.

The Feeds.—These machines are made in both gear- and friction-feeds. The illustration shows the machine having friction-feed. Motion is trans-

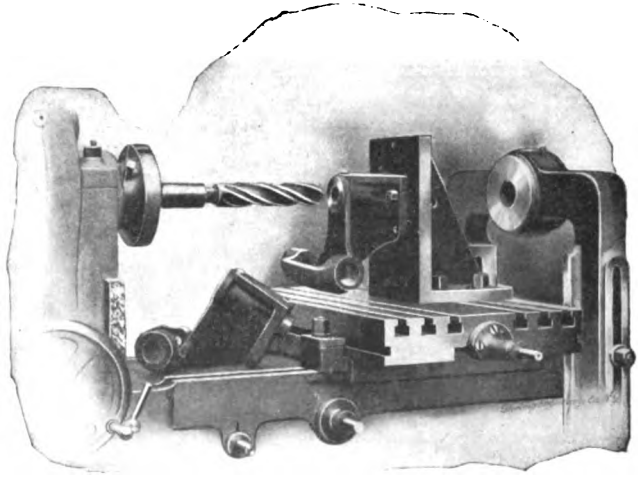

FIG. 470.

mitted to the friction-disks *F*. *F* 1 and *F* 2 by the gears *G*. On the worm-shaft *S* 1 is a worm engaging with a worm-wheel. The shaft of the latter gives a traversing motion to *S* by mechanism not shown.

This mechanism may consist of either two bevel-gears operating a screw passing through a threaded nut in *N*, or a rack and pinion, the rack being bolted to the under side of *N*. The feed may be changed by raising or lowering the disks *F* 1.

The Work. — Fig. 470 shows a casting in one of these machines secured to an *angle-plate* and ready to be roughed out with a *three-lip drill*. When the drilling is completed the hole may be *reamed* to final size. More accurate work, however, may be done by "truing" up the hole with a boring-bar before using the reamer.

Fig. 471 shows a casting in which three small holes are to be bored at each end. For this purpose a small bar is inserted in the socket of

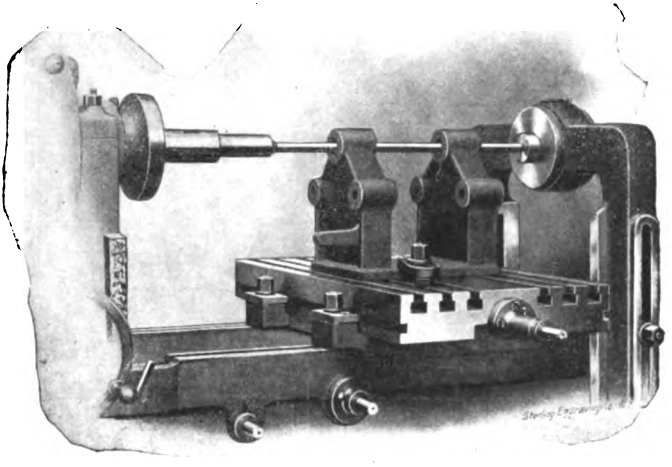

FIG. 471.

the main spindle and a reducing bushing is used in the yoke. Having bored the upper holes, the bar is removed and the table adjusted to bring the work into alinement for the next two holes. The screws controlling the table movements in these machines are furnished with index-dials reading to thousandths of an inch. These dials are of value in work of the above character or in any other work where accurate spacing of the holes is required. For work requiring a higher degree of accuracy, such as fine jig-work, etc., a *precision cross-feed screw* is furnished.

The Facing Attachment shown in Fig. 472 is parted in the middle

of its bore, and it may be readily secured by the two bolts and a key in any position lengthwise of the bar. The cutter is held at C, being clamped by the nut N 1, and it is fed radially by the star feed shown.

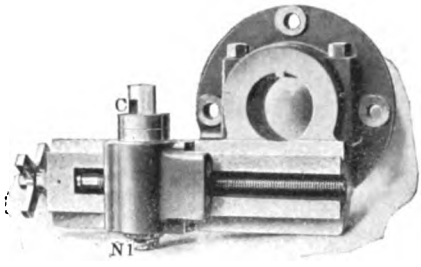

FIG. 472.

In Fig. 473 a slightly different facing attachment is shown in operation. In this particular case the bar and yoke cannot be used, and the

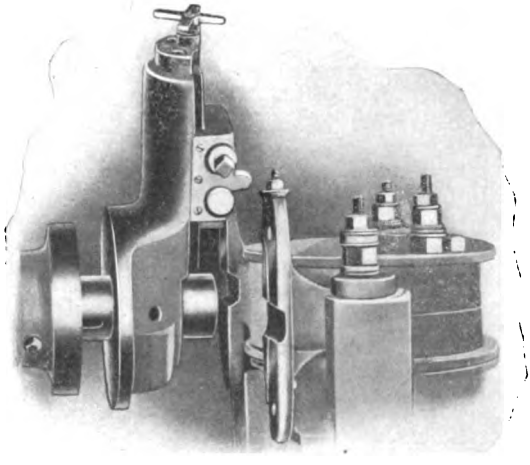

FIG. 473.

attachment is carried on the end of the spindle. Ordinarily the bar may pass through the work, and when necessary the attachment may be reversed and the opposite end of the work faced

Miscellaneous Work with the Facing Attachment.—The author of this work has used a facing-head in a horizontal boring-machine for a

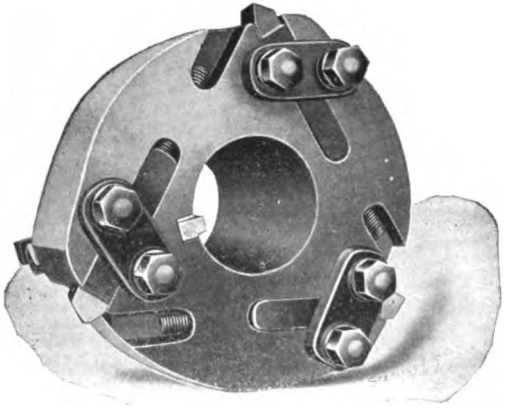

FIG. 474.

great variety of interior and exterior turning. With a tool similar to the boring-tool used in the tool-post of a lathe, shallow holes may be bored to size or merely "trued up" preparatory to the use of the reamer, and with a thread-tool interior threads may be cut. Also with suitable tools various shapes of turning may be performed on hubs, including thread-cutting.

Fig. 474 shows a boring-head for large holes. This is secured to the bar by a key or bolted to a face-plate on the bar. The cutters are adjusted by the screws and held by the straps as shown.

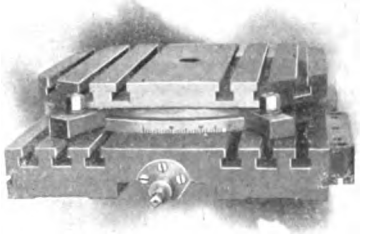

FIG. 475.

Rotary Tables.—These tables provide a means by which holes radiating from a common center may be drilled or bored. They are fitted to the cross-feed table or carriage as shown in Fig. 475. The one in the figure is graduated for 180° of movement.

Milling in the Horizontal Borer.—When supplied with either hand or power cross-feed the horizontal boring-machine may be used as a miller. Fig. 476 shows a large drum mounted on indexing centers. It is

required to mill four deep slots in the drum. Having milled the first slot as shown, the drum is turned through 90° by the indexing mechan-

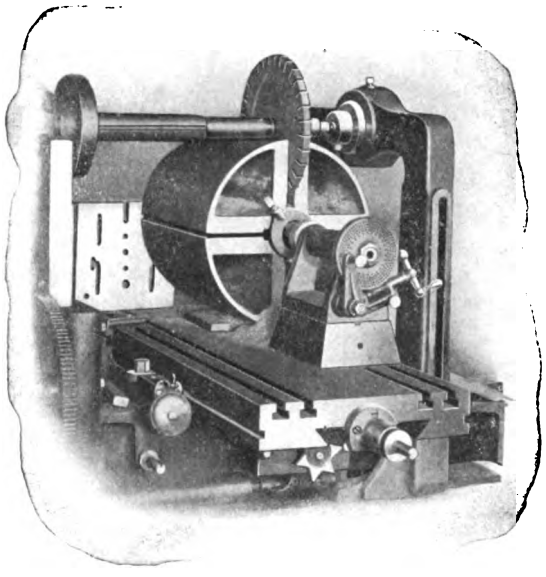

FIG. 476.

ism and the next slot milled, etc. This illustration shows only one method, but it is obvious that face-mills, end-mills, and other milling-cutters may be secured to the end of the spindle or on the bar and used on any work to which the cutters are adapted.

Base-boring and Drilling Machines.—In Figs. 477 to 480 inclusive is described a class of machines which, in order to distinguish them from the foregoing, we shall call base-boring machines. These machines are especially adapted to *heavy framework*, and this work is usually secured to the low base-plate of the boring-machine. There is considerable variation in the design of these machines, and in some of them tapping and milling may be done as well as drilling and boring. Fig. 477 is a perspective view of one of these machines and Fig. 478 shows the machine engaged in boring two large frame castings. These castings are bolted together in connection with their cross-girts, and in boring the two together more accurate alinement may be obtained than if they were bored separately.

In Fig. 479 is shown the same machine milling T slots in the table

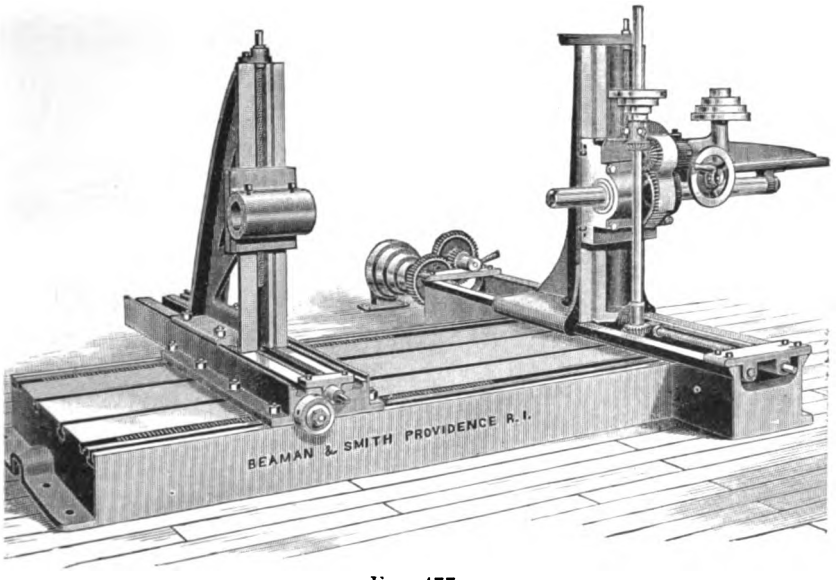

FIG. 477.

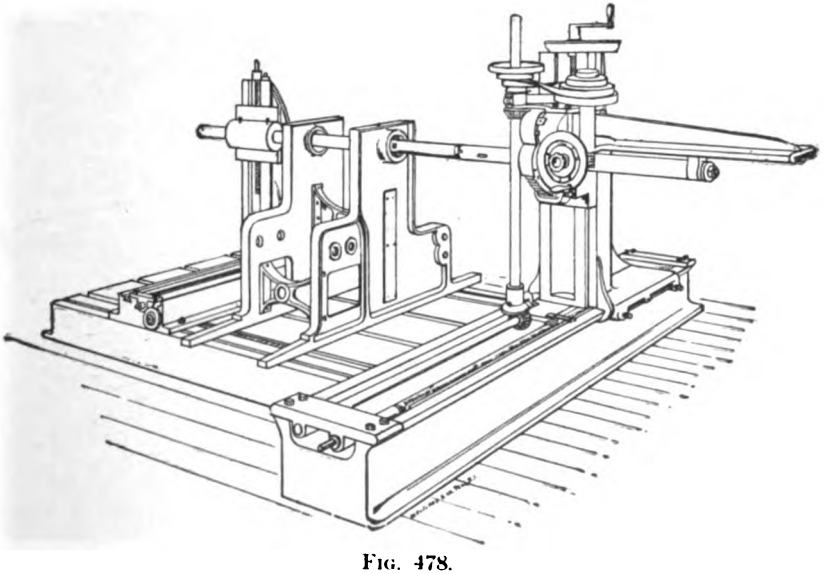

FIG. 478.

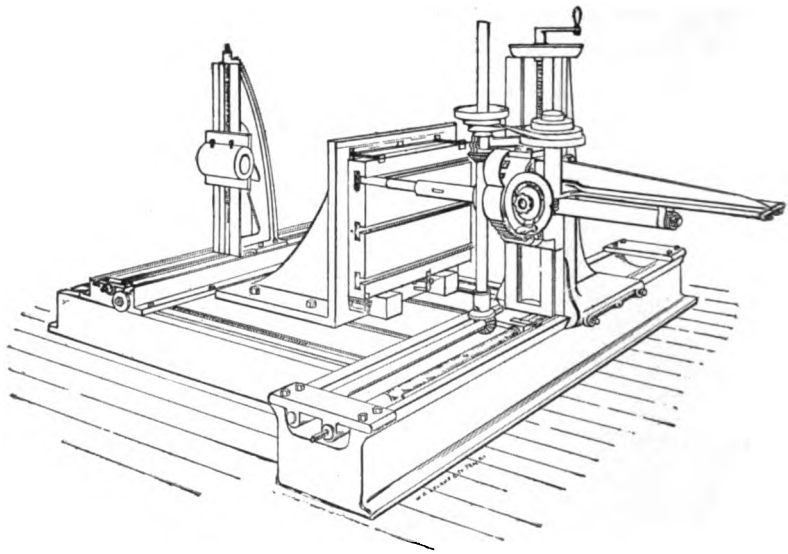

FIG. 479.

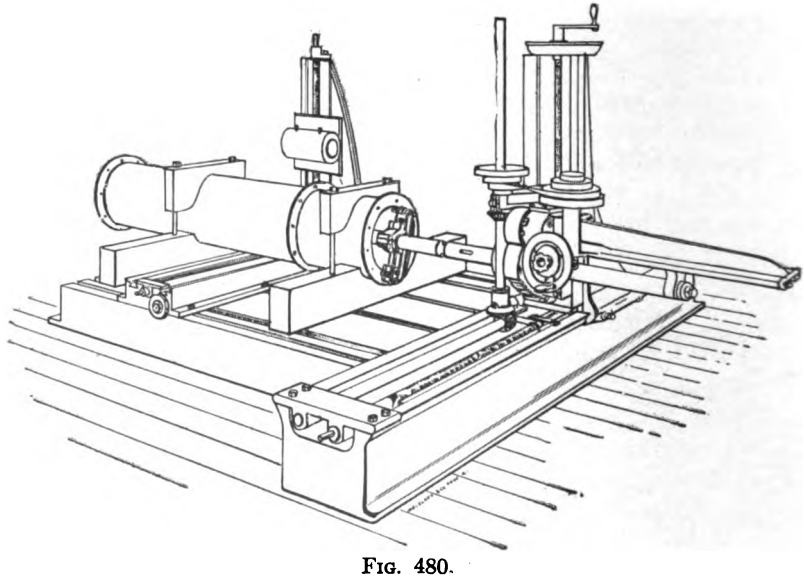

FIG. 480.

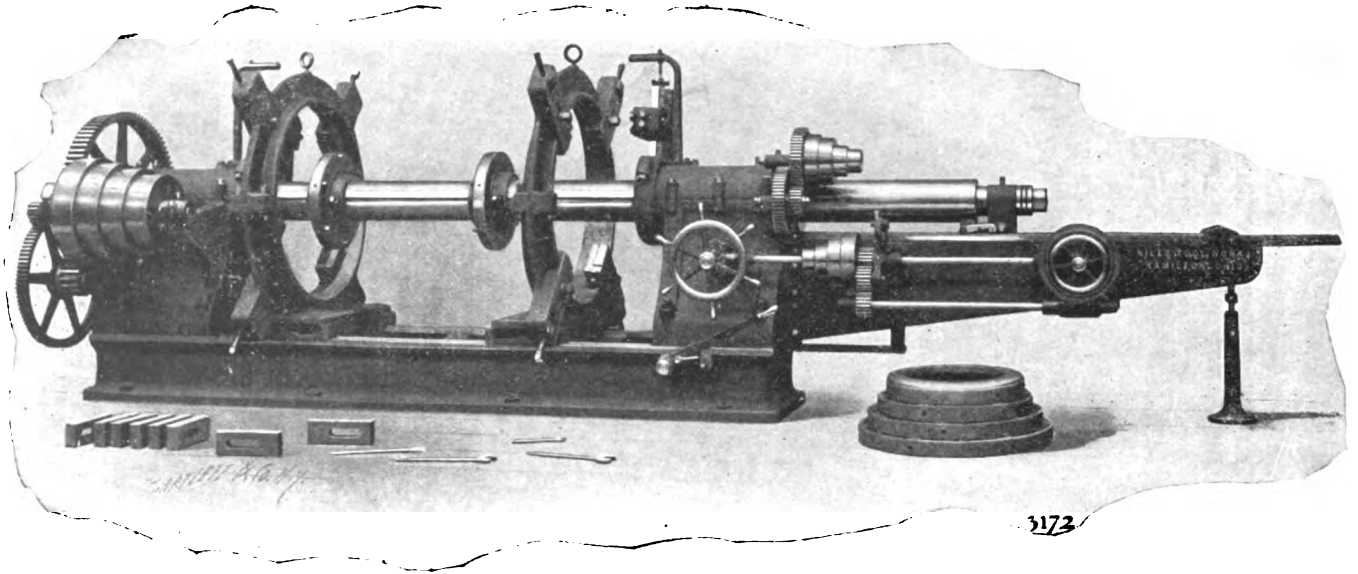

FIG 481.

of some machine. For this work two milling-cutters are required. First a rectangular slot of the full depth is cut with an end-mill. The under cutting is next done with a mill of the required shape.

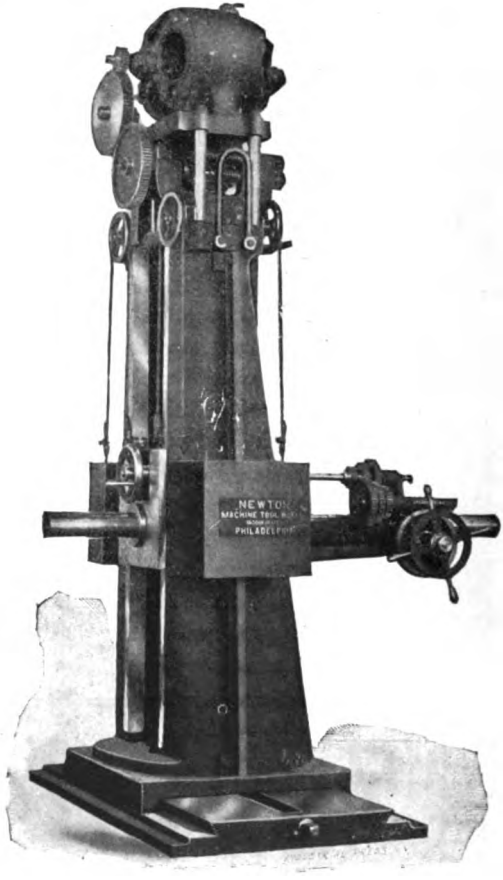

FIG. 482.

Machining a Flanged Cylinder.—The usual method of securing a plain cylinder to a machine-tool table is clearly shown in Fig. 480. In this case the flanges of the cylinder are to be faced, drilled, and tapped at one chucking. Two stout timbers upon which the cylinder is to rest are shaped to fit the cylinder. Two shorter pieces are similarly shaped and used as straps to hold the cylinder down. In some cases the timbers, having been cut out to the approximate shape, are bored out to fit the cylinder while strapped to the boring-machine base-

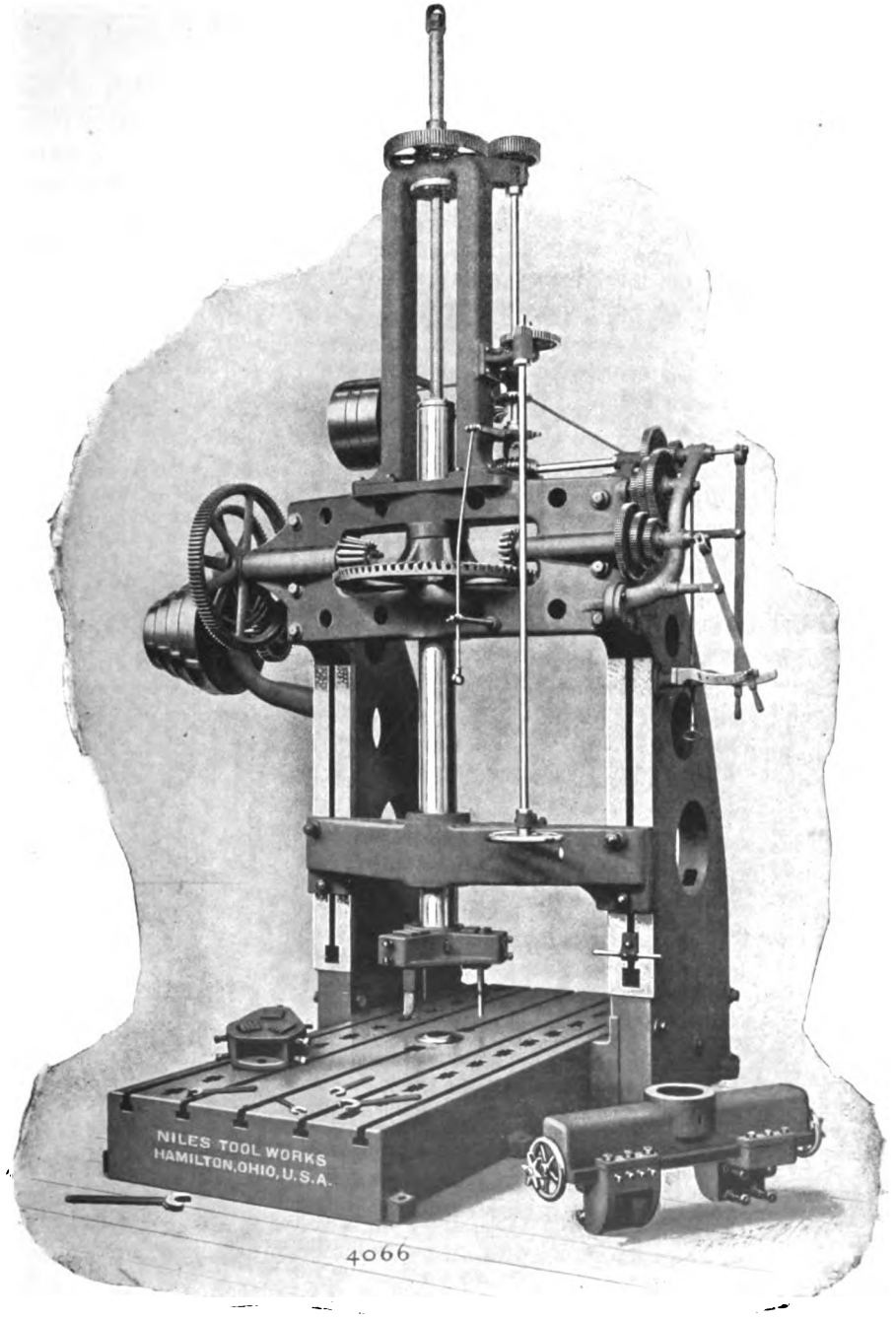

Fig. 483.

plate, or table. This method facilitates the accurate alinement of the cylinder in the boring-machine. The use of a wooden fixture is very desirable in clamping *frail* cylinders, the elasticity of the wood compensating for any irregularity there may be in the periphery of the cylinder. When a large number of cylinders are to be machined, a special cast-iron fixture is generally used; but in the case of frail work the fixture must be adjusted with delicacy and skill to avoid distorting the cylinder. The latter precaution is of especial importance in *boring* a cylinder.

The machines described in connection with the three preceding illustrations are designed for a large variety of work. Both heads are adjustable vertically on the standards, and both standards are adjustable lengthwise on the base. The left standard is also adjustable to and from the right-hand standard. These machines have the usual automatic and hand feeds.

Special Boring- and Facing-machine.—In Fig. 481 we show a machine designed especially for boring and facing gun-hoops. It is evident, however, that other cylindrical work can be bored as well. In addition to various sizes of interchangeable cutter-heads the machine has two facing-heads. These facing-heads are carried on revolving-sleeves in the head-stock and tail-stock. The driving mechanism consists of the cone pulley and gearing on the left. The machine has the usual hand and automatic feed, the latter consisting of the cone pulleys and gearing shown at the right.

The special fixtures used for holding cylinders are constructed on practically the same principle as a *steady rest* used in the lathe. In this machine two steady rests are used instead of a special fixture.

Portable Boring-, Drilling-, and Milling-machines.—These machines, one of which is shown in Fig. 482, are designed to be used in connection with a large base-plate and bolted in different positions on the plate instead of moving the work. This is advantageous in very heavy work. Being electrically driven, these machines are independent of the main shaft. The column swivels on a graduated base and the whole machine may be fed along a short distance on its sub-base without slackening the bolts which secure it to the floor-plate.

Boring-machines somewhat similar to the above are made with a head which swivels in a vertical plane in addition to the swiveling base. These are *Universal* boring-, drilling-, and milling-machines.

CRANK-BORING MACHINE

A good example of the crank-boring machine is shown in Fig. 483. As will be seen the spindle is *vertical*. On the lower end of the spindle is a cutter-head carrying three cutters. The cutters bore the shaft-holes and crank-pin holes in large crank-arms by making a circular groove which releases the central core. This is very much quicker than making chips of all the material removed. When facing is to be done the head on the spindle is replaced by the one on the floor.

Holes as small as 2″ in diameter are sometimes made with cutters arranged somewhat similar to the method described above. There is, however, this difference: a hole about $^3/_4$″ diameter is first drilled and the small cutter-head is made with a central pin or pilot which is guided by the small hole in the same manner that a pin-drill is guided. With this device the core removed is in the form of a hollow cylinder or ring. The tool is not adapted to drilling deep holes, but large holes may be drilled deeper because the cutters may be stronger.

Large cylinders for vertical engines are usually bored in a vertical boring-mill designed especially for such work. If bored in a horizontal machine the deflection of the cylinder-walls might cause the cylinder to be "out of round" when set on its permanent foundation. In 1882 the cylinder for the steamer Pilgrim was bored at the Morgan Iron Works in New York, where the writer was then employed. This cylinder was 110″ diameter by 14′ stroke. It was bored in a vertical machine with a sliding-head bar.

CHAPTER XXII

VERTICAL BORING- AND TURNING-MILLS, TOOLS AND WORK

Advantage of the Machine in Turning Heavy Work.—In the horizontal boring- and drilling-machine and in the upright drill the tool (with rare exceptions) revolves and the work is stationary. In the vertical boring- and turning-mill the work revolves while the tool is stationary—at least the tool does not revolve. The last-named machine is in reality a lathe, and could with propriety be called a vertical-spindle lathe. It is designed to do about the same class of work as is done on some short chucking-lathes, and is better adapted to such work, as we shall presently show. Fig. 484 shows a 37″ Bullard boring- and turning-mill. The table *T* serves the same purpose as the face-plate of a lathe, the work being secured to the table by straps and bolts, as shown in Fig. 484, or by a chuck, as shown in Fig. 485. In the first figure the machine is shown facing a boring-mill saddle and turning the edge, both tools being used, while in the second illustration the operation is that of turning the inner and outer diameters of a cylindrical shell. The machines shown in these two illustrations are designed for comparatively small work, but when we consider that the larger machines of this class will handle work of many tons weight, the advantage of the horizontal table or face-plate will be apparent. Thus, in securing an engine fly-wheel weighing, say, ten tons, to the vertical face-plate of a lathe, it is necessary to support this weight independently of the face-plate during the time of adjusting the work. If the same fly-wheel were turned in a vertical boring- and turning-mill its weight would be supported by the horizontal table, and for this reason it could be more quickly adjusted concentric with the spindle of the machine. Another advantage of the latter machine is that the weight of the revolving mass does not tend to wear the spindle out of correct alinement, as it does in the ordinary lathe.

Fig. 486 shows a sectional view of the table and spindle of the machine illustrated in Fig. 484. The weight is supported on the angular bearing *B*, and the spindle is held to its bearing by the adjusting-nut *N*.

In Fig. 487 is shown a rear view of the same machine as arranged to be driven by a constant-speed motor. Power is transmitted from the

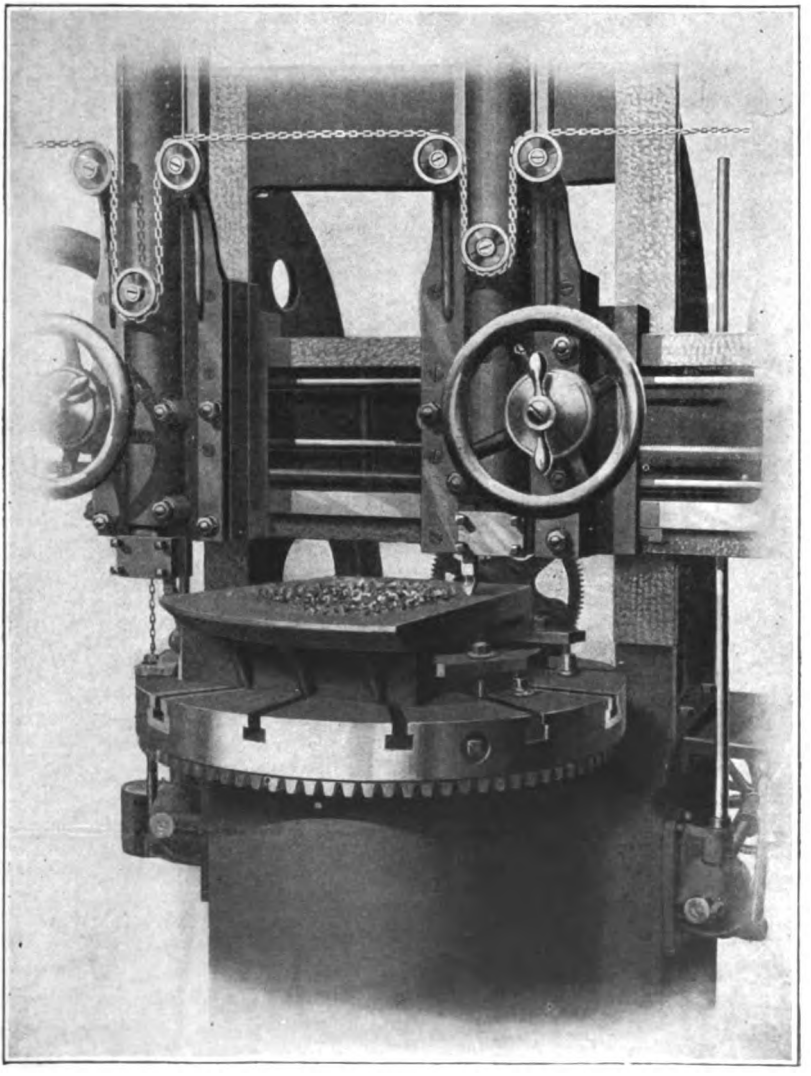

FIG. 484.

motor to the cone-pulley shaft by a Renold silent chain. We may say by way of parenthesis that this chain furnishes a very efficient and

satisfactory drive. The lower cone-pulley P is connected to the upper by a leather belt. On the same shaft with the lower cone pulley is a

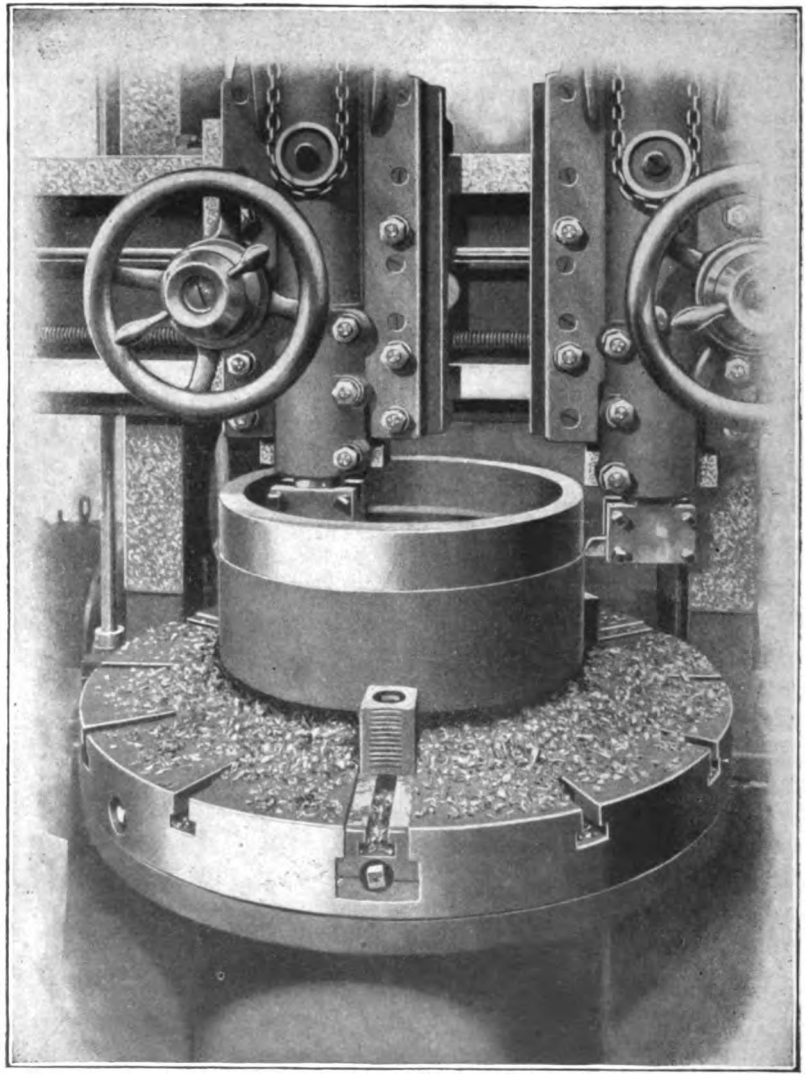

FIG. 485.

bevel-gear G meshing with the bevel-gear $G1$. The latter drives the table through the reducing gears shown, the last gear in this train being

the bevel-gear *G* 2, which meshes with a large gear on the under side of the table.

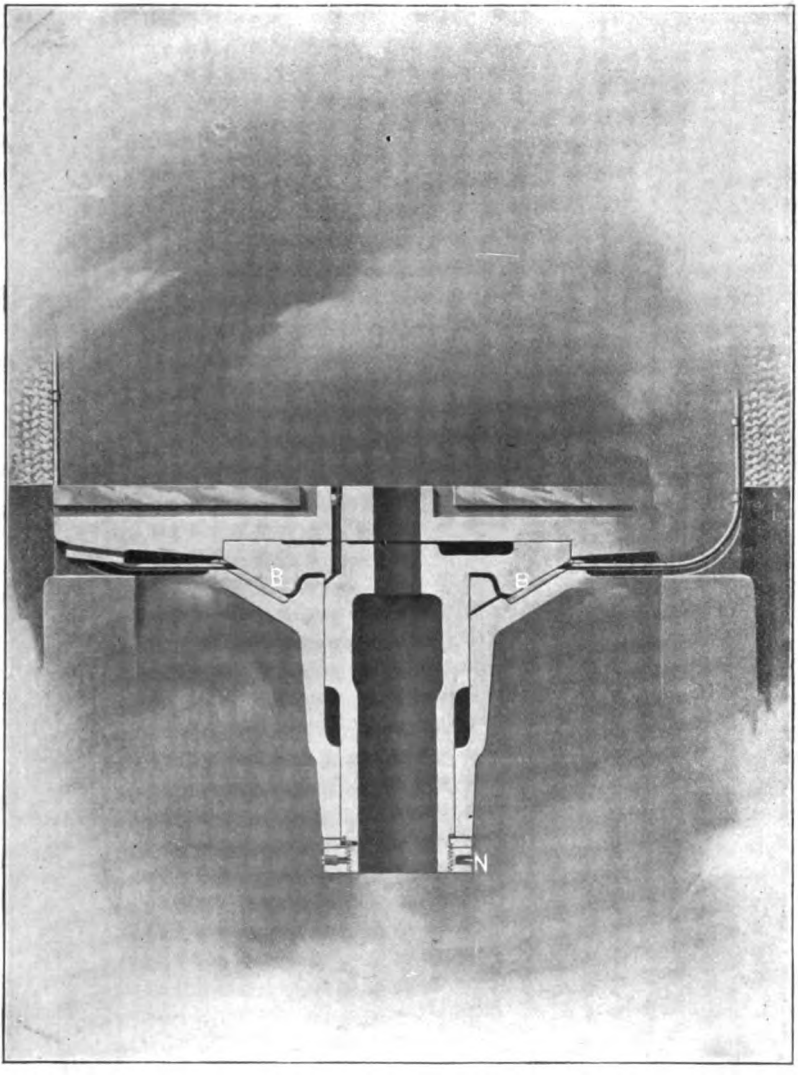

FIG. 486.

Fig. 488 shows a complete front view of the 37″ machine. The two side-castings *H*, called the housing, are bolted to the bed *B* and

the whole is supported on a foundation of masonry. Movable vertically on the housing is the cross-rail R carrying the two heads H 1. Both of

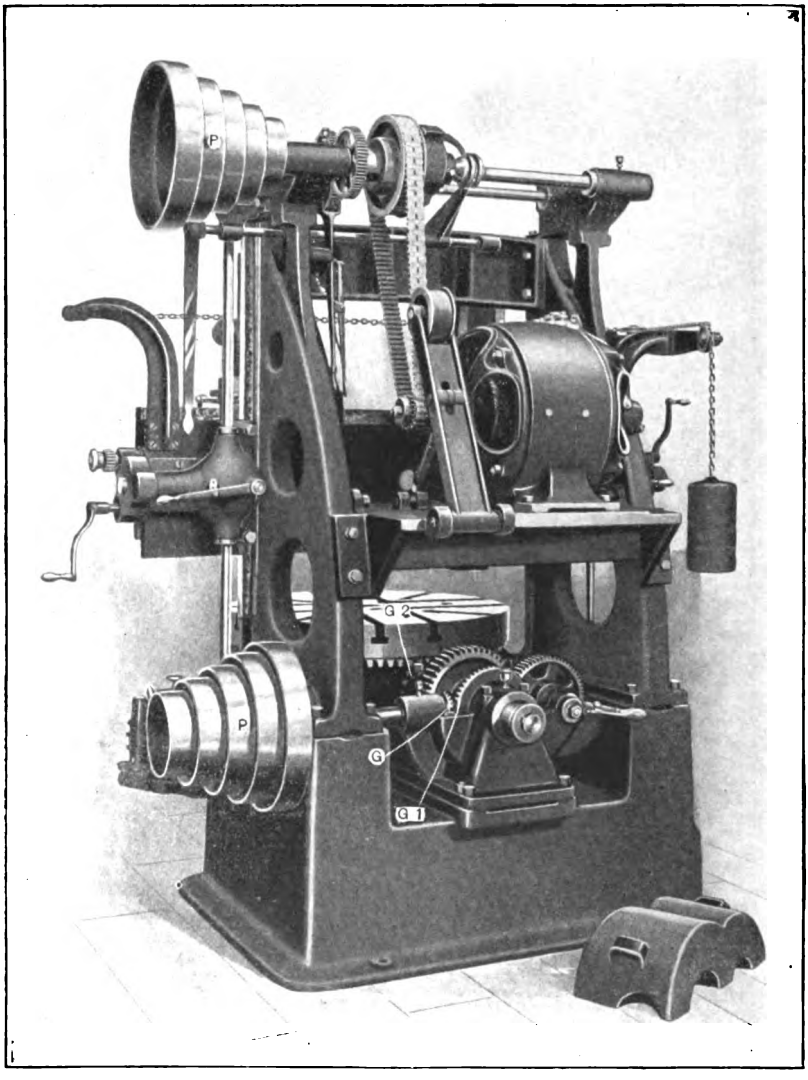

FIG. 487.

these move on R, and each carries a tool-holder T. The vertical slides have vertical movement and angular movement in a vertical plane.

They are fed automatically by the feed-gearing *G* 3, screw *S*, and rod *R* 1. They may also be operated by hand-cranks shown. The table *T*, to

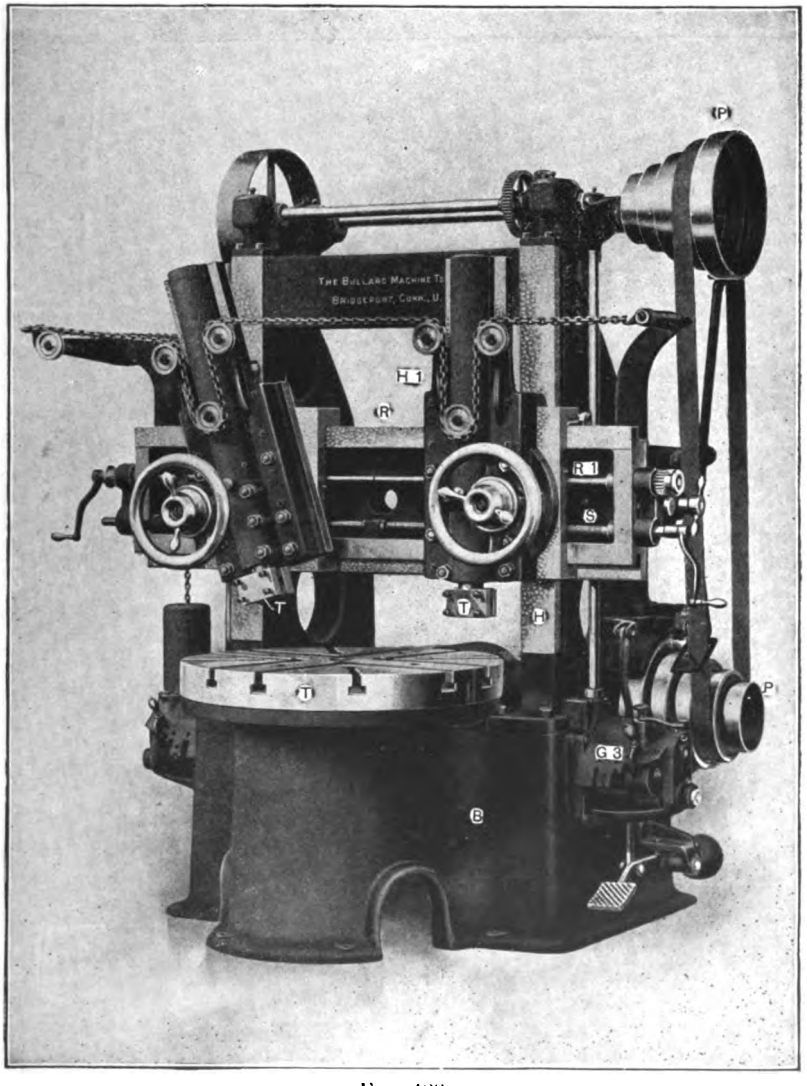

FIG. 488.

which the work is bolted, is operated by cone pulleys *P* and gearing described in connection with Fig. 487.

Each of the two tool-heads may be moved to a central position over the table, the vertical slides being bored to receive boring-bars in this

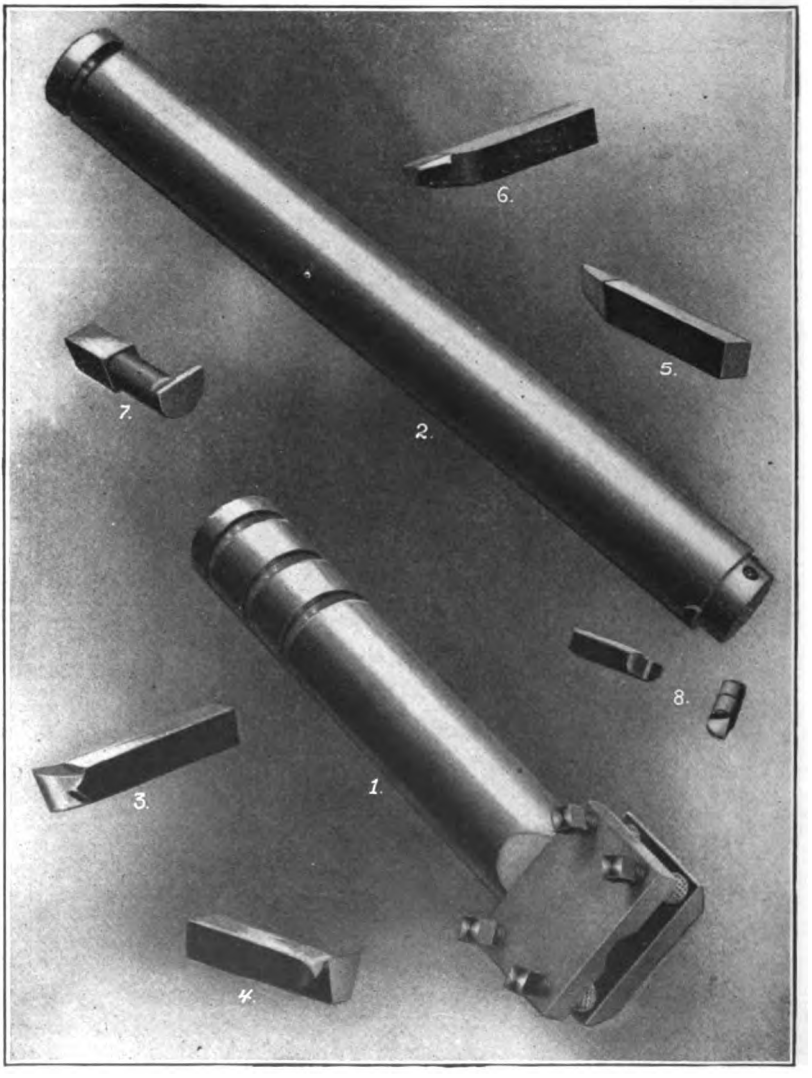

FIG. 489.

position. The table is also bored to receive bushings to fit different sizes of bars. By this arrangement a boring-bar may be supported at each

end, and this makes it a great deal stiffer for taking heavy cuts. Large reamers, drills, etc., may also be held in the vertical slide. To receive

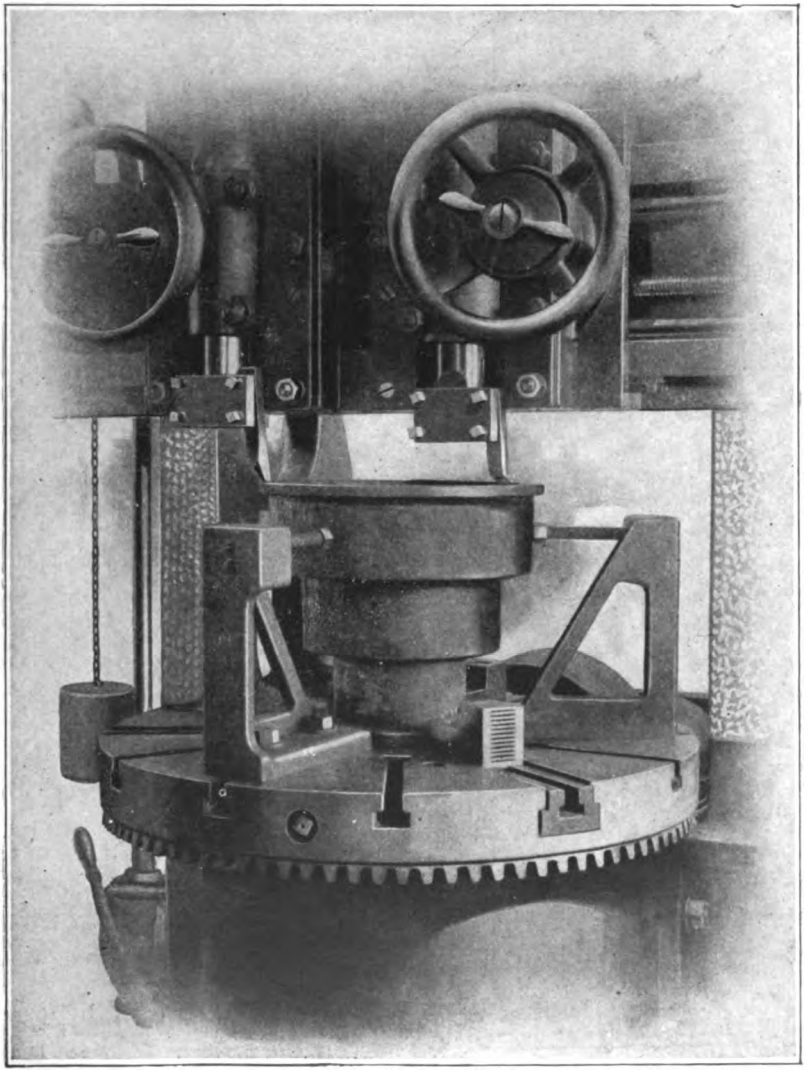

FIG. 490.

small drills and reamers, the tool-post is bored to the Morse taper, and these smaller tools may be used without removing the tool-post from the

slide. In drilling and reaming each of the heads may be moved up against a fixed stop. This stop brings the drill or reamer into exact alinement with the center of the table.

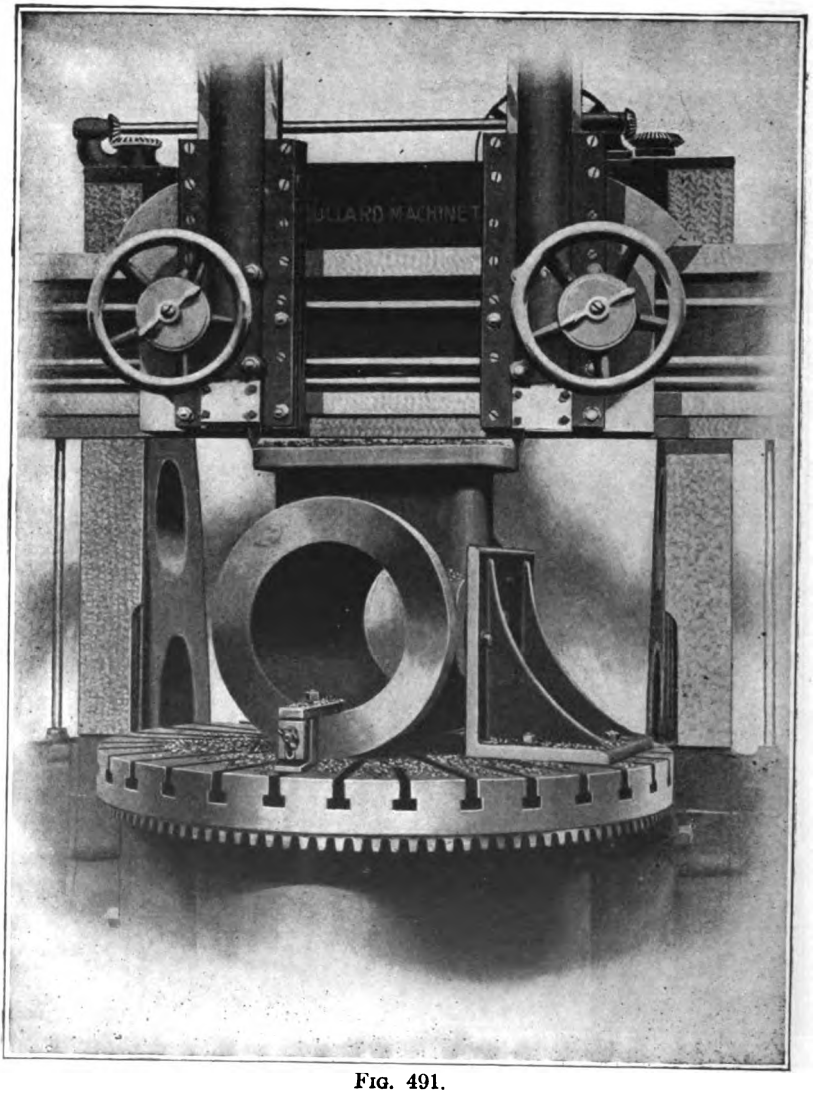

FIG. 491.

This machine appears to have some one of the modern "cone-of-gears" feeding systems. The feed has ten changes ranging from $^1/_{32}$

to $^3/_4$ inch horizontally, and from $^1/_{50}$ to $^1/_2$ inch in angular and vertical directions.

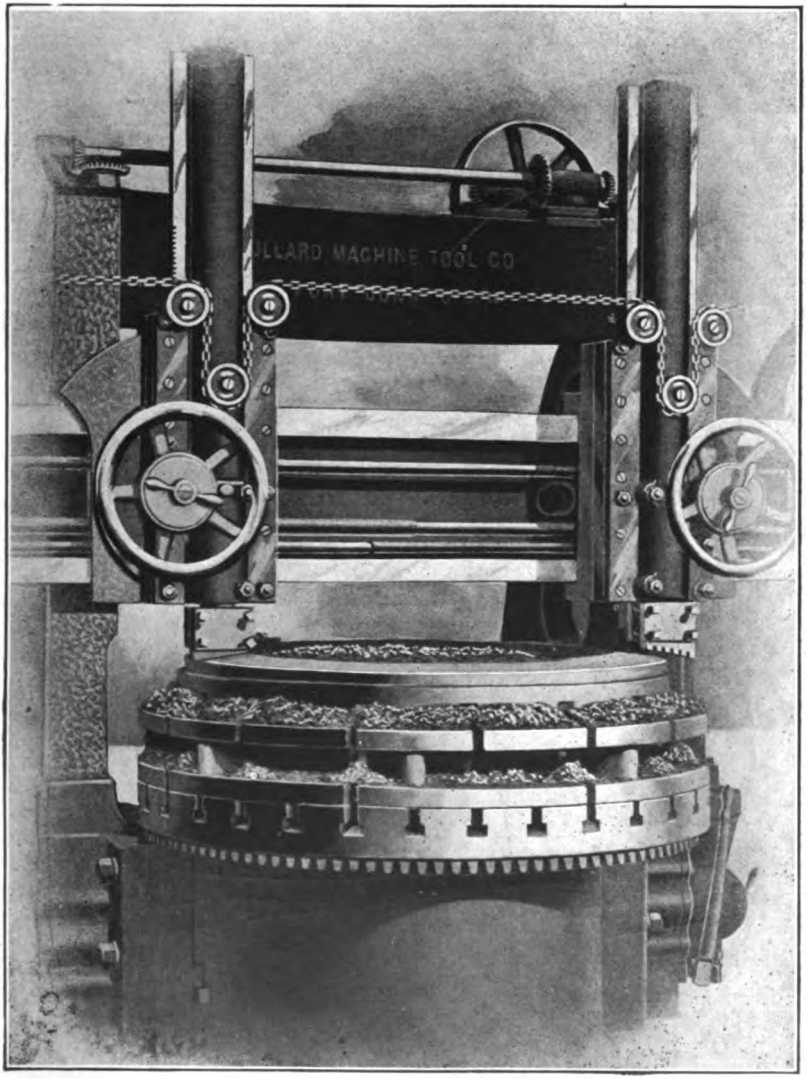

FIG. 492.

The Tools.—In Fig. 489 we show some of the tools used in a vertical boring- and turning-mill. The names of these tools are as follows: No. 1,

tool-holder; No. 2, boring-bar; No. 3, hog-nose turning-tool; No. 4, wide finishing-tool; No. 5, round-nose tool; No. 6, side finishing-tool; No. 7 boring-tool; No. 8, cutters for boring-bar.

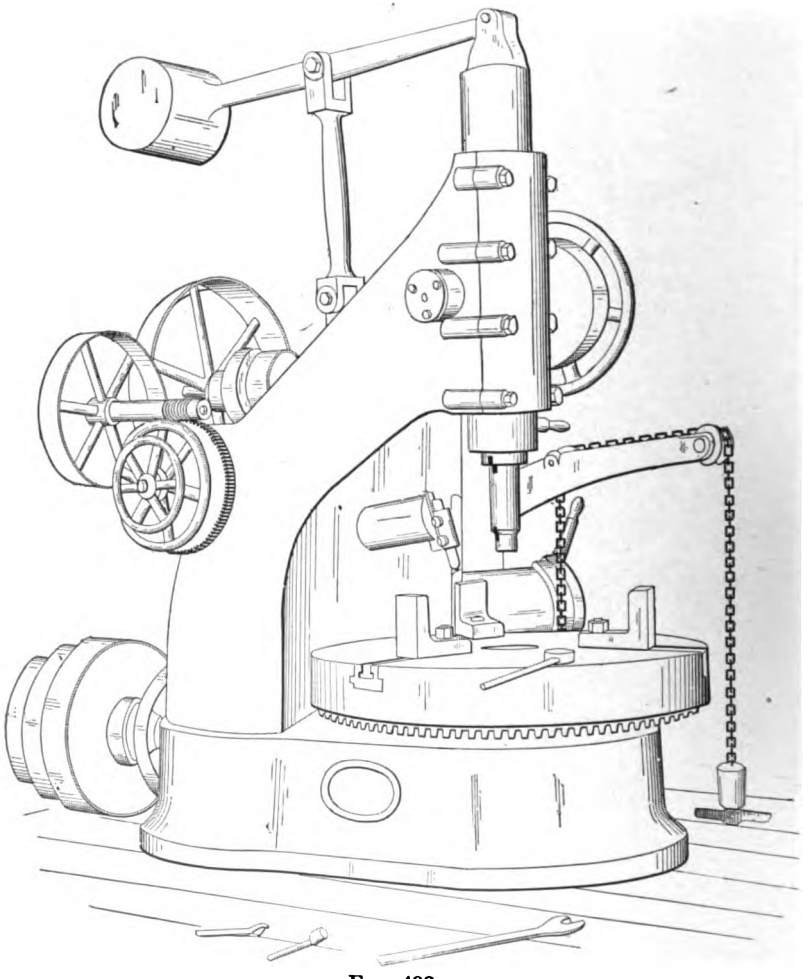

FIG. 493.

In Fig. 490 is shown a method of *bracing a high casting*, and in Fig. 491 we show how the angle-plate may be used in holding work having a face at right angles to the surface to be machined.

In roughing-out a casting with a broad tool it is often advantageous to notch the cutting-edge of the tool as was explained in connection

with Fig. 203. In Fig. 492 we show the principle as used on work in a vertical boring- and turning-mill, a notched tool being shown at the right and a plain tool at the left.

The boring-mills described in this chapter are of small size. The

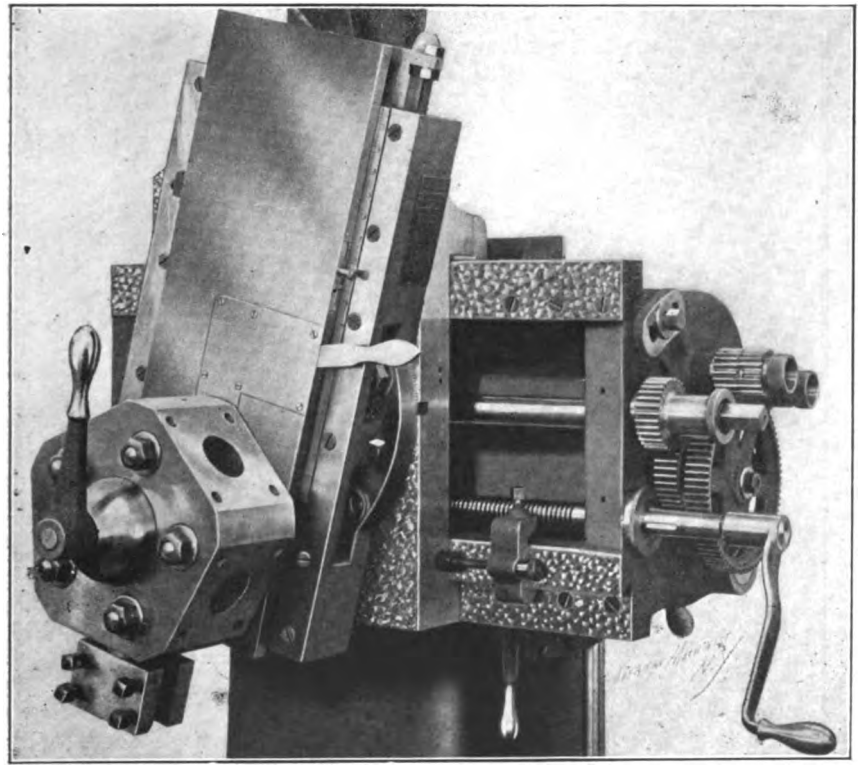

FIG. 494.

same manufacturers, however, make them also in large sizes. Some machines are made smaller and with only one tool-head.

Special Boring-mills for Car-wheels.—A boring-mill designed especially for car-wheels is shown in Fig. 493. This machine carries a universal chuck in connection with the table. The jaws of this chuck fit under the flange of the wheel in such a manner that by one movement of the chuck-wrench the car-wheels are chucked true. Attached to the machine is a hoisting device for lifting the car-wheels on and off. The boring-bar is counterbalanced, as boring-bars are in all vertical boring-mills. This machine is for boring and facing the hubs only.

Turret-heads on Vertical Boring- and Turning-mills.—The turret principle, which has been described in connection with other machines

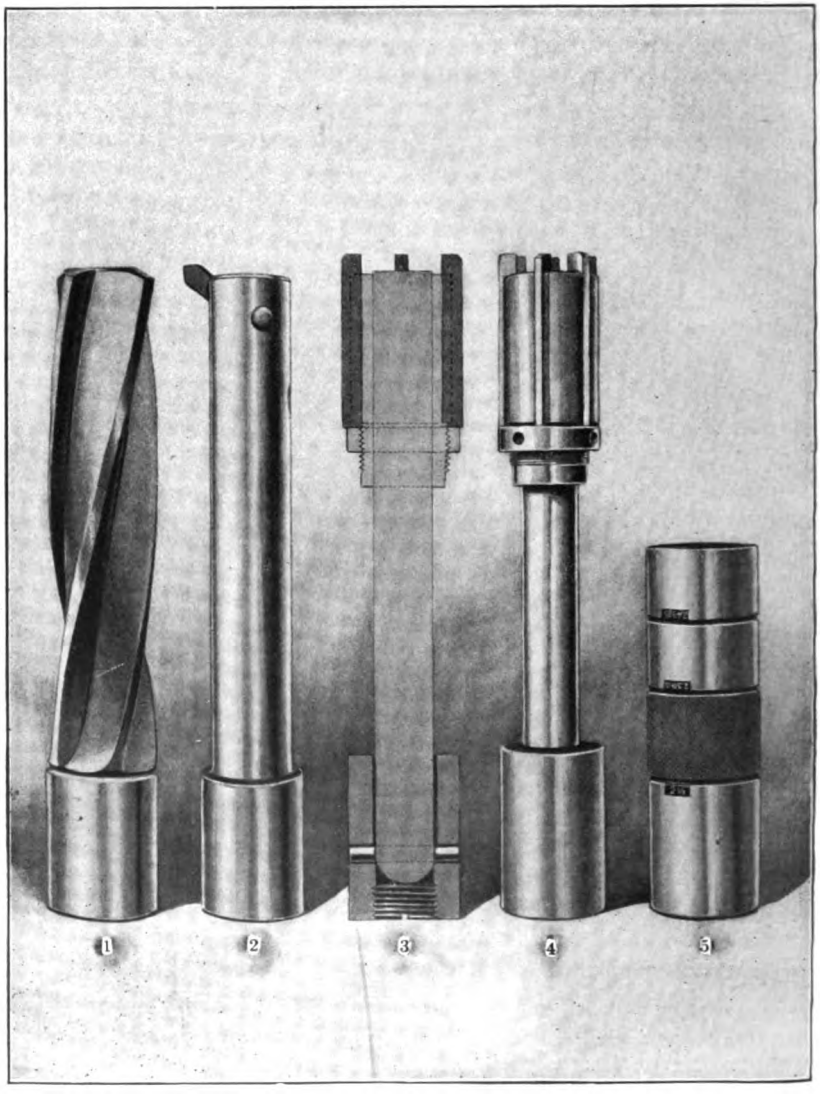

FIG. 495.

in this book, is used also on vertical boring- and turning-mills. In Fig. 494 is shown a five-tool turret as applied to machines of this class.

In machining a pulley, for instance, all the tools for this work, including the reamer for the bore, could be held in the turret-head. In Fig. 495 we show several tools used in connection with the turret-head, the names of which are as follows: No. 1, four-lip drill; No. 2, boring-bar; No. 3, sectional view of adjustable reamer with floating shank;* No. 4, perspective view of same reamer, and No. 5, limit-gage.

Vertical boring- and turning-mills can be furnished with gearing for cutting thread. The turret-machine shown in Fig. 494 is provided with thread-cutting mechanism, and the driving- and feeding-gears, which are of novel design, are fully described in vol. 27, pages 116–118, of the "American Machinist."

---

* The shank end of the floating-shank reamer is so constructed as to admit of a small degree of looseness or freedom, the object being to compensate for a possible error in the alinement of the machine.

CHAPTER XXIII

PLANERS AND SHAPERS AND PLANER AND SHAPER WORK

The Metal Planer.—In Fig. 496, which shows a typical metal planer, *B* is the bed, *T* the work-table, *R* the cross-rail, *C* the cross-head carrying tool-slide *S* and tool-block *T* 1, *H* 1 the housing, and *P*, *P* 1, *P* 2, *P* 3 tight and loose pulleys on driving-shaft. The housing castings *H*1 are bolted on either side of the bed *B*. Cross-rail *R* is movable vertically on the housing by a crank on shaft *H*, which shaft operates, through the gears *G* 2, two screws passing through threaded lugs on *R*. Cross-head *C* has automatic movement on *R* by feed-disk *D*, feed-gearing *F*, and rack *F* 1. The slide *S* may be clamped on *C* at any angle in the vertical plane, and when so clamped may be fed automatically by the feed mechanism noted.

Feed-disk.—Fig. 497 shows a sectional view of a feed-disk similar in principle to the one on this machine. A side elevation of the disk and its accompanying mechanism is shown in Fig. 498. The shaft *S* 3 in Fig. 497 is driven by gearing, and its motion is reversed when the planer-bed reverses. Integral with *S* 3 is flange *F* 2. The disk *D* is in two parts, *D* and *D* 1, and these are held together on *F* 2 by the screws *S* 4. Between *F* 2 and the disc are the two *leather* washers shown. Now when *S* 3 revolves, *D* is caused to revolve with it *by friction* between the leather and the disks. Being driven by friction, which may be increased or diminished by the screws *S* 4, the disk *D* may be stopped independently of *S* 3. While *S* 3 makes a number of revolutions, depending upon the length of table-stroke, *D* always makes less than one revolution. The motion of *D* is limited by *S* 5 operating between two fixed projections on the side of the housing. Referring back to Fig. 496, while *D* always moves the same, the feed may be varied by moving *B* 1 nearer to or farther from the center of the disk. For this purpose knob *K*, in connection with the screw *S*, shown in Fig. 498, is used.

Feed-gearing in Cross-head.—The immediate connection of the feed mechanism with *C* and *S* is made by the screw *S* 1 and feed-rod *F* 3.

This will be more clearly understood by reference to the sectional view, Fig. 499. This figure shows a vertical section through center of *C*, *S*,

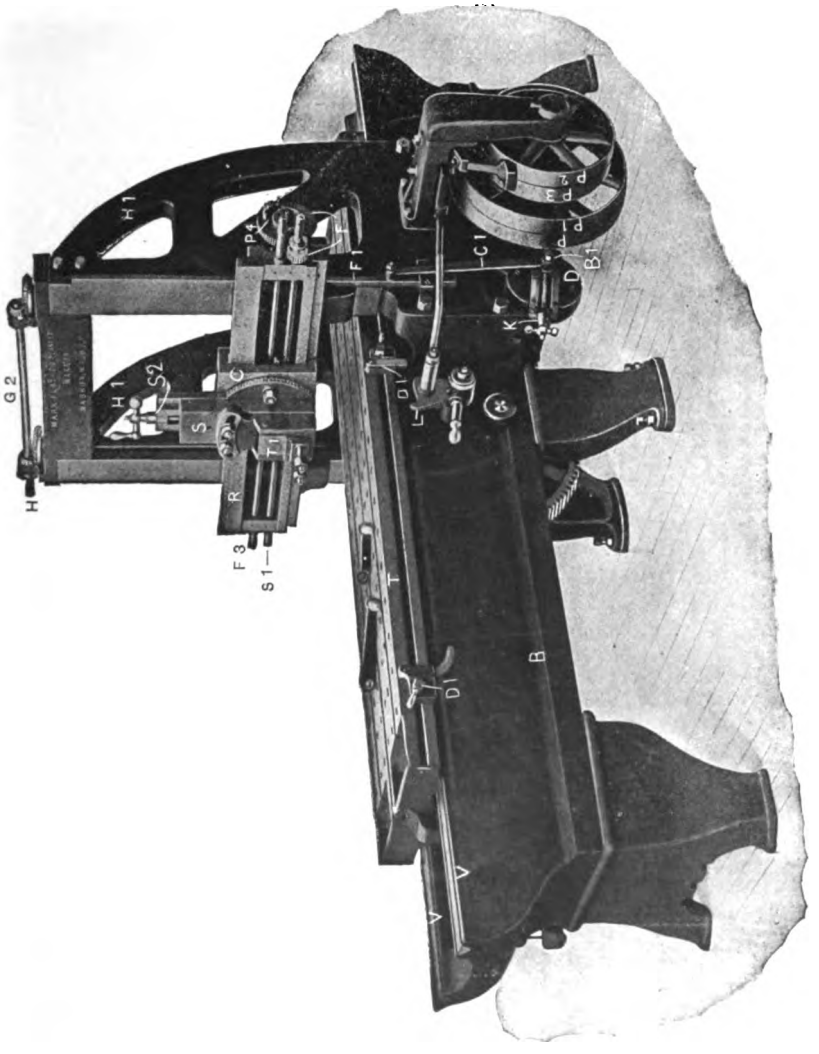

Fig. 496.

and *T* 1. It will be seen that *S* 1 passes through a threaded lug fastened on *C*. *F* 3 drives the miter gear *G* 3 by means of a feather key, which permits *G* 3 to slide on *F* 3. Meshing with *G* 3 is the miter gear *G* 4, operating the screw *S* 2 by means of gears *G* 5 and *G* 6. When *S* 2 is

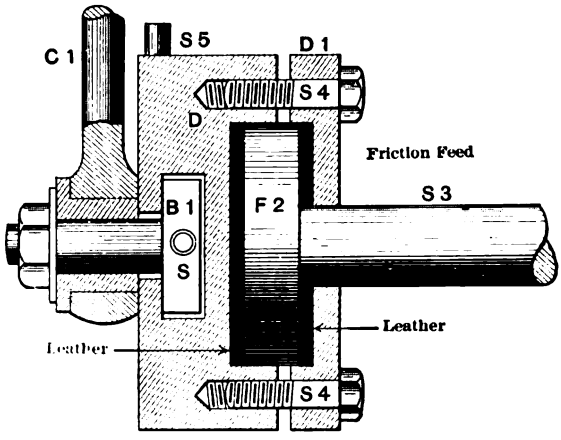

FIG. 497.

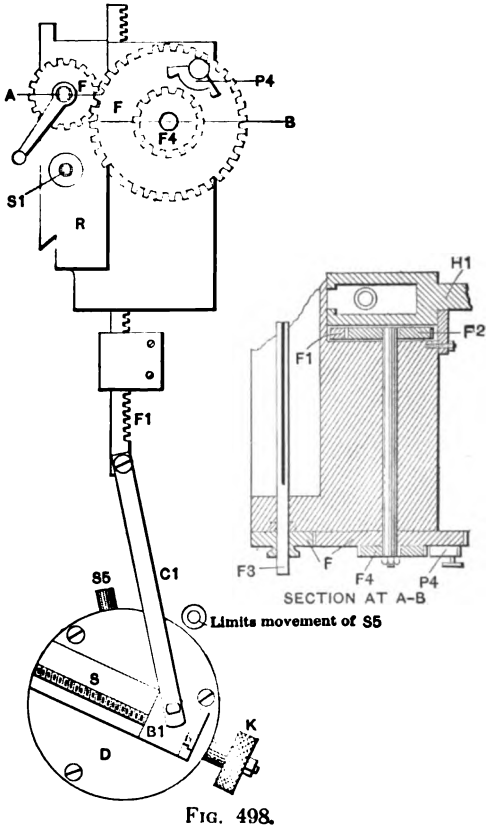

FIG. 498.

in operation it causes the slide S to move up or down, depending on whether the pawl P 4 (Fig. 498) is in forward or reverse connection with its ratchet-wheel F 4. Cross-head C (Fig. 499) may be fed independ-

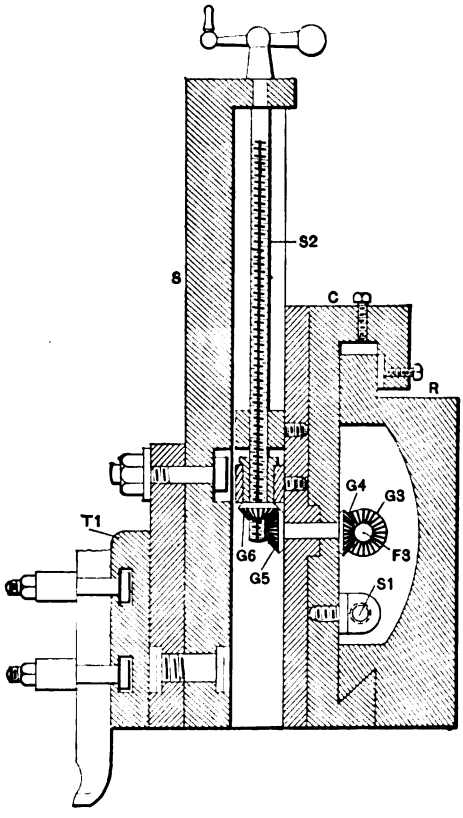

FIG. 499.

ently of S and vice versa, and by placing the pawl in a neutral position, as shown in Fig. 498, both feeds may be disengaged.

Table Movement, etc.—The table T (Fig. 496) traverses the bed backward and forward, being guided in the V-shaped ways V. The work is secured to the table, and for each stroke of the table the cross-head C, carrying the cutting-tool, is fed a distance of from about $^1/_{64}$ to $^1/_2$ inch, depending upon the nature of the work. The movement of the table toward the tool is effected by an open belt which runs on the pulleys P and P 1 (Fig. 500). The first of these pulleys runs loosely and the other is tight on shaft S 4. On the same shaft are two other

pulleys, tight and loose, with a crossed belt. When the table reaches the end of its stroke the *belts* are *automatically shifted*, so that the belts

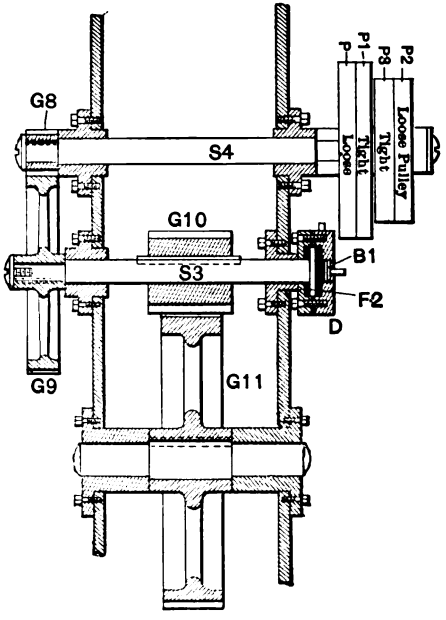

FIG. 500.

which were on the tight and loose pulleys $P1$ and $P2$ are now on P and $P3$. In other words, when the open belt is driving the table for-

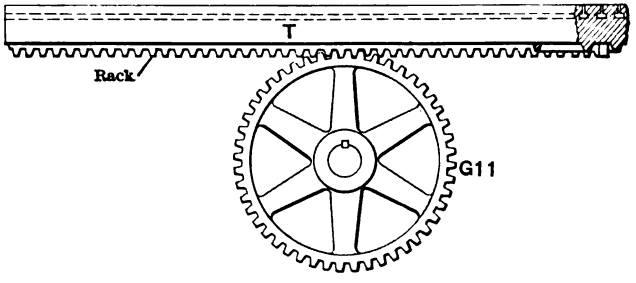

FIG. 501.

ward the cross-belt is running idly on $P2$. and when the cross-belt is running the table backward the open belt is running idly on P. Keyed to $S4$ is pinion $G8$. This gear, with its connecting-gears $G9$

and G 10, gives motion to the large gear G 11, which meshes with a rack on the under side of the table. A side view of this larger gear, with a section of the table, is shown in Fig. 501.

Referring again to Fig. 496, the belts are caused to shift by the dogs or tappets D 1 engaging with lever L. L is connected to the belts by a system of levers not clearly shown. As the tool does not cut on the reverse stroke the table traverses several times *faster on* the *reverse stroke* than on the forward.

"Second-belt Planer-drive."—Fig. 502 shows a planer the driving-gear of which is a departure from ordinary construction. It will be

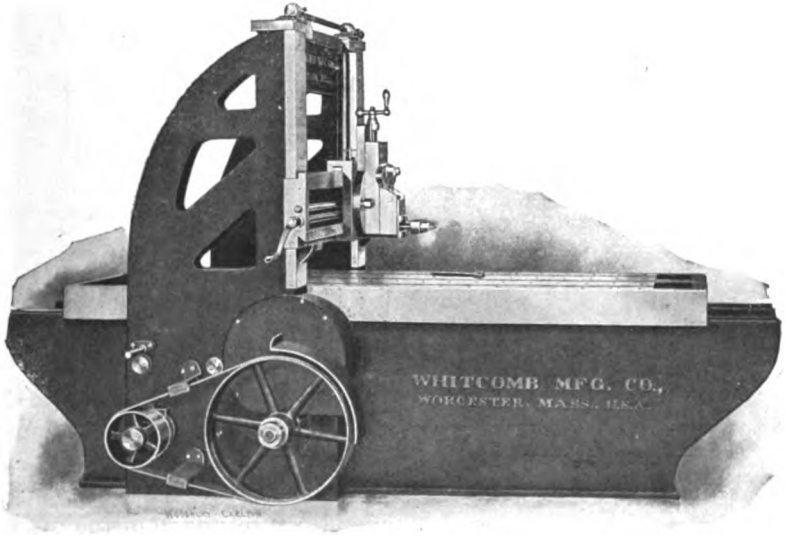

FIG. 502.

noticed that in place of the two gears usually seen on the rear side of the planer, this machine has a short open belt. The connection of this belt with the other elements of the driving-gear is clearly shown in Fig. 503. From the three driving-pulleys K, upon which the usual narrow shifting belts are employed, it is easy to follow the driving mechanism up to the pinion J which engages directly with the bed-rack. The tension of the belt E is maintained by the weight B as shown. The principal claim of the manufacturers is *softness of action*, due to the substitution of a belt in place of high-speed gears. This softness of action they say "assists greatly in turning off smooth, finely finished

work," and at the same time admits of higher *cutting* and *return speeds*. Since the introduction of high-speed steel there has been a growing demand for higher planer speeds, but the difficulty is due in a considerable measure to the reciprocating movement of the heavy table.

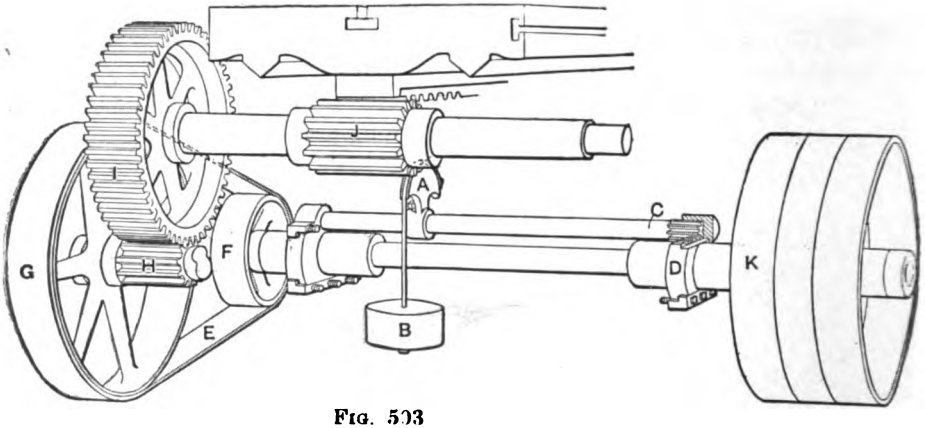

FIG. 503

Designers are beginning to see the necessity of providing some means for cushioning this mass of metal, and some efforts have been recently made with this in view.

Open-side Planer.—Fig. 504 shows a rear view of the Detrick & Harvey open-side planer. As will be seen this machine has but one housing casting. The object of this design is to provide for wider work than would pass between two castings. The overhang necessitates a very heavy cross-rail and housing casting, and one rear view of the machine is presented in order to better show the proportions of these parts. In these machines the pulley-shaft is parallel to the planer-table, spiral gears being used to operate the latter. The tables are reversed "at a ratio of from three to four, to one, depending upon the size of the planer." In this respect the open-side planer is about the same as other planers.

For work extending much beyond the end of the cross-rail a supplemental rolling table is furnished with the open-side planer. This supplemental table is shown in connection with Fig. 505, which is a front view of the planer.

Extension-heads.—In the absence of a planer of the above description, wide work may be planed by the use of the extension-arm shown

in Fig. 506. This extension is fastened to the tool-slide by the same bolts which ordinarily hold the tool-block, the latter being secured

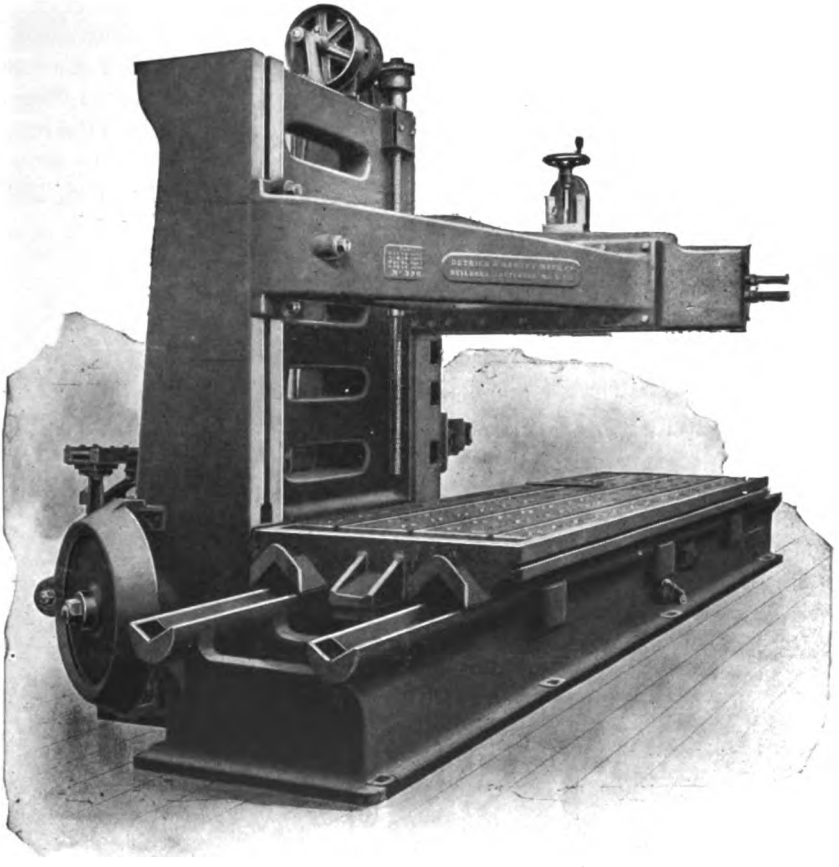

FIG. 504.

on the outer end of the arm. This device is, of course, not so satisfactory as the open-side planer.

Extra Heads on Large Planers.—Some of the larger size planers have two cross-heads or tool-heads and take two cuts at once; and the largest planers have, in addition to the above, one head on each of the housing castings, making four heads. The planer shown in Fig. 505 has three tool-heads.

Difference Between the Shaper and Planer. Different Designs of Shapers.—The shaper is a kind of small planer. One essential difference between the two machines is that in the typical planer the work moves to the tool, while in the shaper the tool moves to the work.

Shapers are made in two leading designs respecting the ram movement, namely, crank-shapers and geared shapers. In the crank-shaper the ram is driven directly or indirectly by a crank movement. In the geared shaper the ram is driven by a gear meshing in a rack on the under side of the ram.

General Description of a Crank-shaper.—Fig. 507 is a perspective view of a "Cincinnati" back-geared crank-shaper, and Figs. 508, 509,

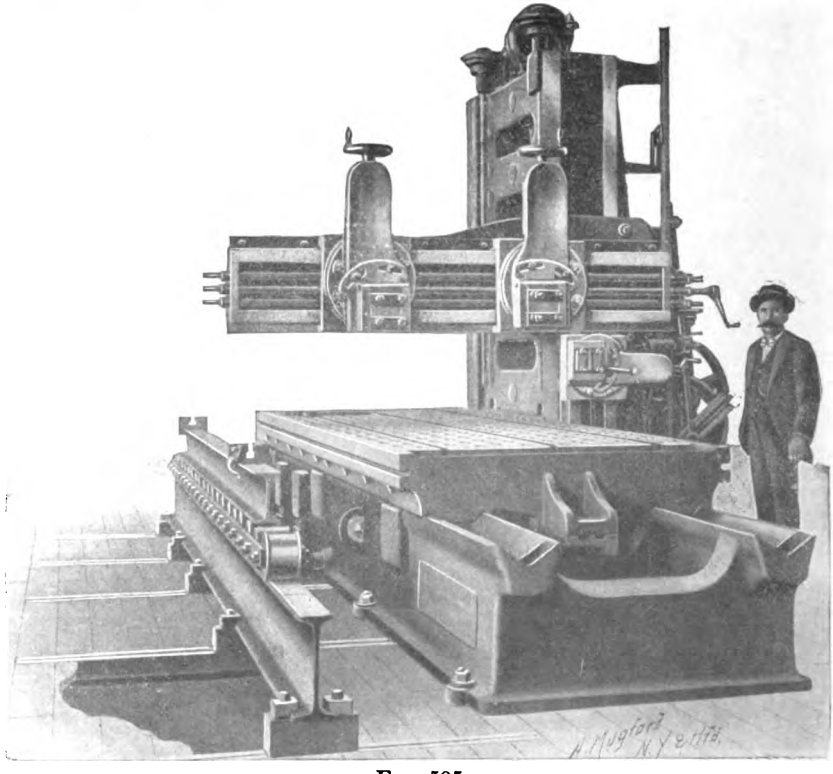

FIG. 505.

and 510 are sectional views. Similar letters refer to similar parts in all the views. Referring to Fig. 507, A is the box frame or column; B the ram sliding in guides on top of A, and carrying the cutting-tool; C the graduated swiveling-plate, which may be locked in any angle in a vertical plane; D the tool-slide; E the apron or tool-block on D; F the

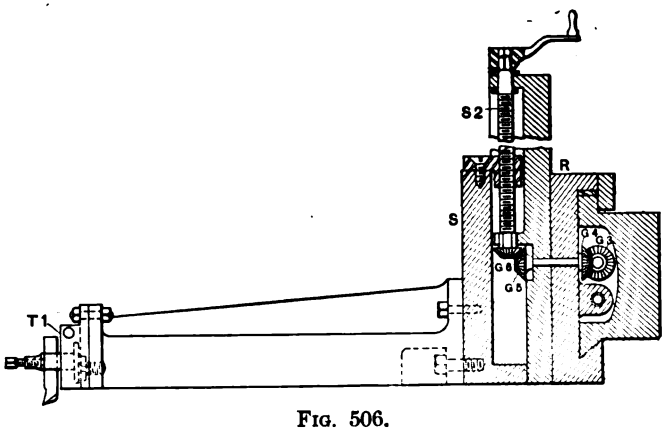

FIG. 506.

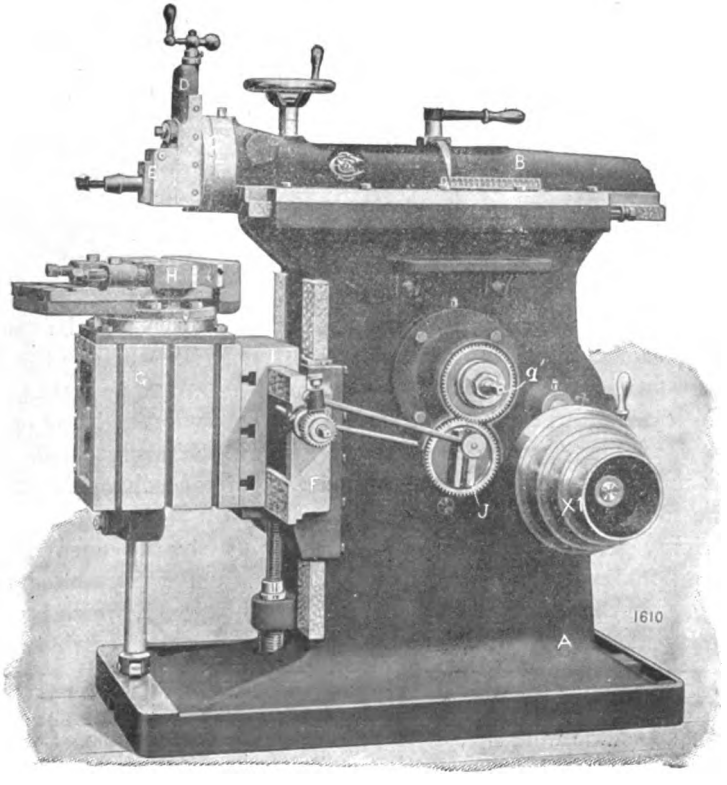

FIG. 507.

cross-rail; *G* the table and *H* a vise detachably secured to the table. The work may be held by bolts in T slots on either of the three faces

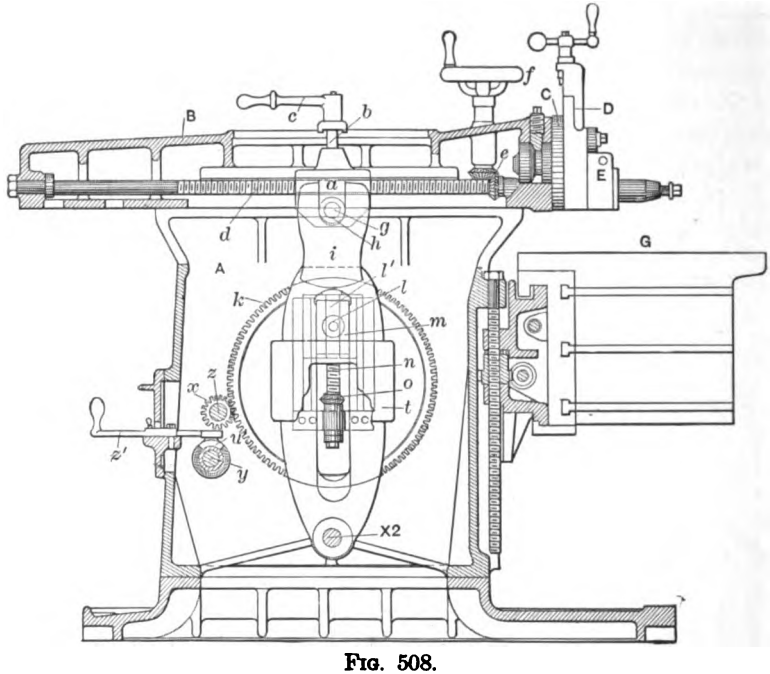

FIG. 508.

of the table, or it may be held in the vise. The table may be removed from the saddle *I* and certain kinds of work may be bolted to the latter.

Feed-gearing.—The saddle is fed along the rail *F* by means of the slotted crank *J* and ratchet and pawl device shown. The latter operates a screw passing through a threaded nut on the saddle. The cross-rail is moved vertically on the planed face of the column by a crank on the lower square-end shaft.

Driving-gear.—The ram *B* is driven primarily by the cone pulley *X* 1. The sectional view, Fig. 509, shows that this pulley is secured to the shaft *y*. On this same shaft is keyed a pinion-clutch *u*, which by means of the lever *z'* (Fig. 508) may be engaged with the clutch-teeth on gear *w* (which turns freely on *y*), or brought into mesh with the gear *v*. In the former case the train of gears *w*, *x*, and *k* would be set in motion and the machine would be running in *single gear*. In the latter case the gears *u*, *v*, *x*, and *k* would be caused to revolve and the machine (or ram) would run slower, being in *back-gear*.

The ram B receives its motion from its connection at g with the oscillating beam or "link" i, and the operation of this link is as follows: Secured to the gear k is an adjustable crank-pin, l, shown in Figs. 508 and 510. This pin is journaled in a rectangular block m. When k rotates

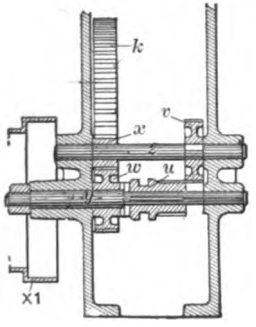

FIG. 509.

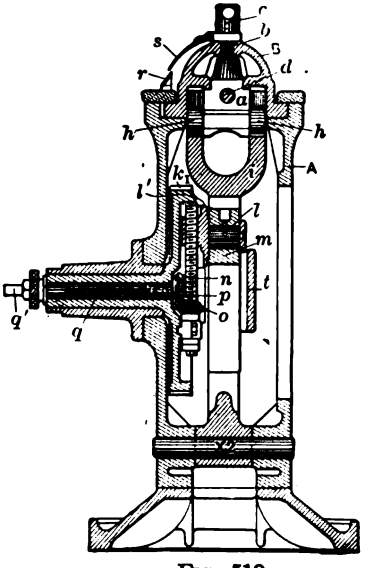

FIG. 510.

it carries m with it, and as m is a sliding fit in the slot in the link, the latter is caused by m to oscillate through an angle depending upon the radial distance of the crank-pin from the axis of the gear k.

Quick Return.—During the time that the crank-pin is moving in the upper part of its circular path the ram is moving forward. In the lower portion of its path the crank-pin approaches closer to the pivot X 2 of the link, and the motion of the ram is reversed at a higher velocity.

Stroke Adjustment.—The length of ram-stroke is adjusted by moving the crank-pin l (Fig. 510) toward or from the center of the gear k, the movement of l being effected by the screw n, gears o, p, and a crank-handle at q'. The square end of shaft q to which the crank-handle is applied is seen just above the cone pulley in Fig. 507. The lengthwise position of the ram is changed by moving the lever c (Fig. 508) and turning the hand-wheel f. The connection of the latter with gears e and screw d is clearly shown. The ram may be adjusted while the machine is in motion.

Geared Shapers.—The general construction of the geared shaper with respect to the framework, table, cross-rail, and feed mechanism is much the same as that of the crank-shaper. The quick return, however, is generally effected by making a difference in the diameters of the driving-pulleys. As previously stated, the ram is driven by a rack and gear movement. The driving mechanism of a geared shaper does not differ sufficiently from that of a planer to justify a detailed description here.

The Traverse Shaper.—In the ordinary shaper the ram has only one movement—the reciprocating movement—the work being fed by the intermittent movement of the table on the cross-rail at right angles to the ram movement. The traverse shaper illustrated in Fig. 511 is so called from the fact that the ram, in addition to its reciprocating movement, is given an intermittent traverse or feeding motion at right angles to its reciprocating motion.

These machines are made either with two rams or one, but they nearly always have two tables. As indicated above, the tables do not need any feed motion, but they may be independently adjusted in vertical and horizontal directions on the main frame. The driving mechanism of this machine consists of the pulley P, the gears operating the crank-gear G, and the rod C connecting G with the ram. The means of changing the length of stroke by moving the crank-pin toward or from the center in the slot in G will be readily understood from the engraving. The hidden end of the connecting-rod C is journaled on a stud or wrist-pin, which is adjustable in a slot lengthwise of the ram, and it is by this means that the position of the ram is changed. The intermittent feed of the ram by means of gears, screw, etc., is but little different from that of the table feed of the common shaper. These machines are especially adapted for very long work.

Ram Movement on Geared Shapers and Crank-shapers Compared.—In the geared shaper the motion of the ram is uniform as to velocity, but not well controlled as to length of stroke; that is to say, when adjusted for a given length it may travel a fraction more or a fraction less. This is due to a slight irregularity in the action of the belts. In the crank-shaper the motion is not uniform, but the length of stroke is accurately controlled by the positive connections. In such exceptional cases as necessitate planing to a line, the crank-shaper has the advantage.

Variable-speed Shaper-gear.—The tendency to substitute tooth gearing for cone pulleys has been referred to elsewhere in this work. In Figs. 512 and 513 illustrate the variable-speed gearing adapted to a

shaper. Referring to Fig. 512, on the shaft *d* is a nest of gears which serve the same purpose as a cone pulley. These in connection with the back-gearing give a wide range of speeds to the ram. The shaft *a*, to

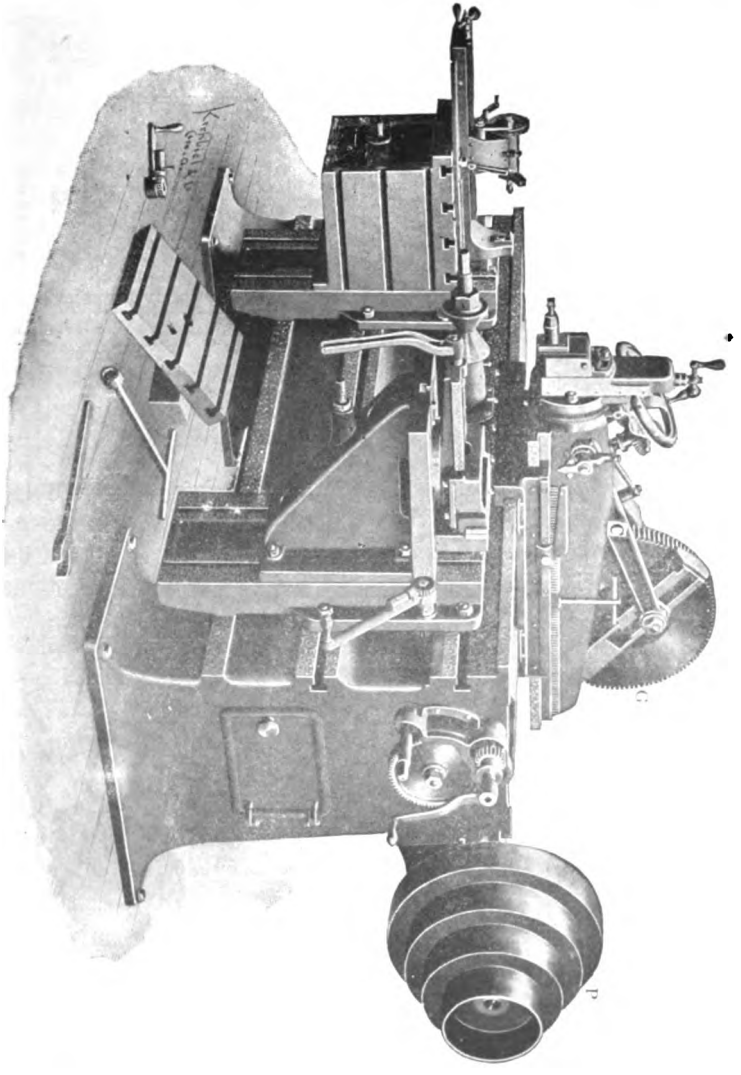

Fig. 511.

which the long pinion *b* is keyed, is driven directly by the belt, or indirectly by the back-gears. These are not shown in the engraving. The inner end of the shaft *a* is journaled in the bracket as shown. Journaled in

the same bracket is a short shaft to which is keyed a frame *e* and a large spur-gear. For each gear in the cone-of-gears at *c* an idler gear is

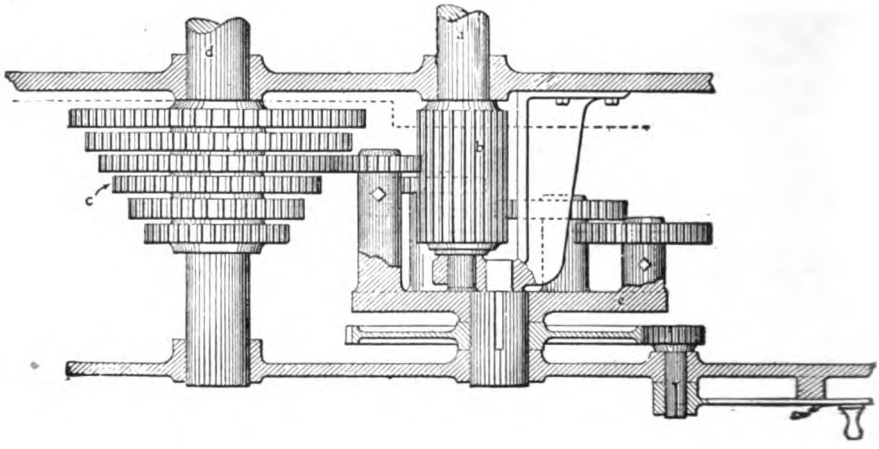

FIG. 512.

mounted on the frame *e*. By a pinion meshing into the large gear referred to and the handle seen on the outside, the frame *e* may be rotated to bring any one of the six idler gears in mesh with its mating gear on the shaft *d*, and with the long pinion *b*. Thus a number of

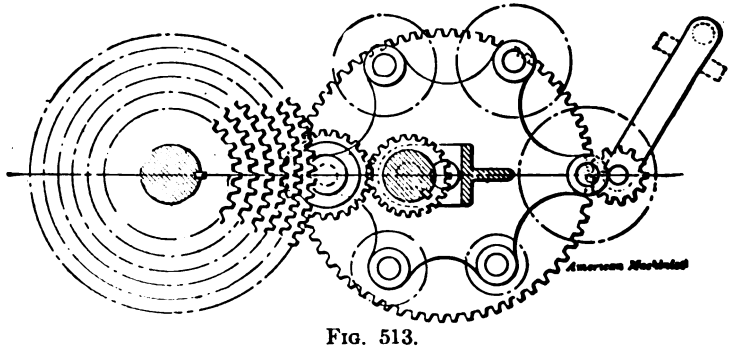

FIG. 513.

speeds of the ram are obtained, each depending on the ratio of the long gear *b* to the one in mesh on the shaft *d*.

Swiveling the Tool-slide and the Tool-apron.—The principles of swiveling the compound rest for turning bevel-gears, as explained in Chapter XVII, apply equally well to the tool-slide of the planer or shaper. As in

the previous case, the workman is very apt to take the complement of the angle for the required angle, both in setting the tool-slide and in testing the work with the protractor. If the angle on the drawing is given from the vertical, the tool-slide may be swiveled directly to that angle; but if an angle less than 90° be given from the horizontal, that angle subtracted from 90° will give the angle at which the tool-slide is to be clamped.

As indicated, the object of swiveling the tool-slide is to plane the work at some angle other than a right angle with the table. The object of swiveling the tool-apron is entirely different. The tool-apron is swiveled in downward cuts to relieve the friction of the tool against the work on the return-stroke. For this purpose the lower end of the tool-apron should be inclined *toward the work.*

A Tool-lifter.—In making an under cut parallel with the surface of the planer-table, it is necessary in the absence of a special device to

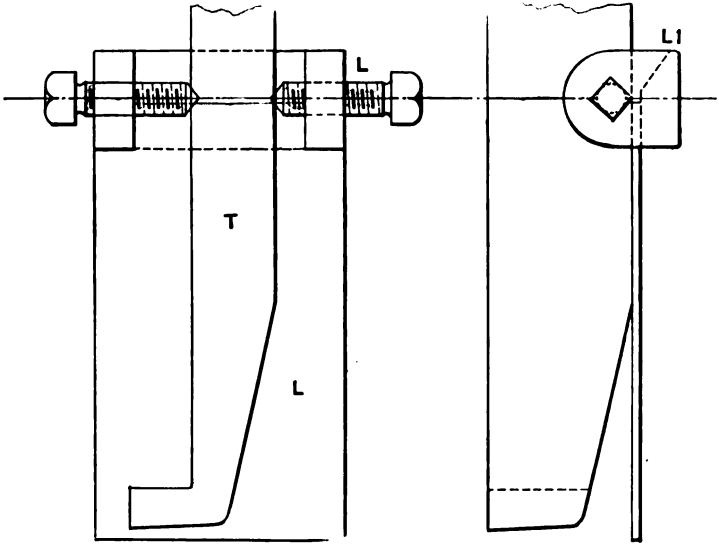

FIG. 514.

either *strap the tool down* so that it cannot lift at all or to lift it by hand at the end of each cut. The first method is injurious to the tool; the second plan, if forgotten for just one stroke, will result in disaster to the tool, or the work, or both. Fig. 514 * shows a very simple device which

* The cut was made after an illustration accompanying an article signed "Workman," published in "American Machinist," Nov. 3, 1888, page 5.

may be used for both upper and under cutting. In this illustration *T* is a front view of a tool shaped for under cutting a T slot, and *L* is a front view of the lifter. The latter consists of a thin plate of metal having two lugs bent as at *L* 1 to receive pointed set-screws which engage with prick punch-marks in the sides of the tool. The operation of the device needs but little explanation. During the cutting-stroke, the lifter, being pivoted at the rear of the tool, strikes the work and lifts above it without disturbing the tool. On the return-stroke the lifter strikes the work and swings upward on the pin to which the tool-apron is pivoted, carrying the tool with it. In using such a device the gibs of the vertical tool-slide must be snugly adjusted, otherwise the drop of the tool and the tool-apron just before the beginning of the cutting-stroke may cause the tool-slide to drop slightly.

Adjusting the Cross-rail.—In raising the cross-rail, the last movement just before clamping the rail should be upward. If the rail be raised and then lowered a slight amount, its parallelism with the table may be disturbed.

Planer and Shaper Work.—As to the work done on the planer and shaper, it will be understood that both are designed mainly for plane surfaces as distinguished from round work done on lathes. The short stocky work can be more conveniently done on the shaper, while the planer is used for larger work.

Fig. 515 shows a vise much used on planers and shapers. The method of clamping the work between the jaws will be readily under-

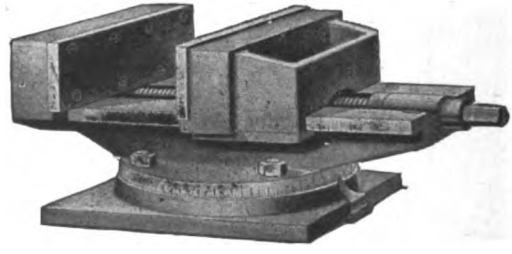

FIG. 515.

stood. The vise swivels on its graduated base, thus providing for planing work at various angles with the jaws.

There is some difficulty in accurately clamping the work in a vise like that of Fig. 515. There is of necessity some freedom in the sliding jaw, and the pressure required to hold the work tends to slightly lift the latter. Many different vises have been designed with the object of

overcoming this difficulty. Fig. 516 shows one of these designs. The illustration represents a piece of work held by pins which are in contact with the work at one end and with the vise jaws at the other. When

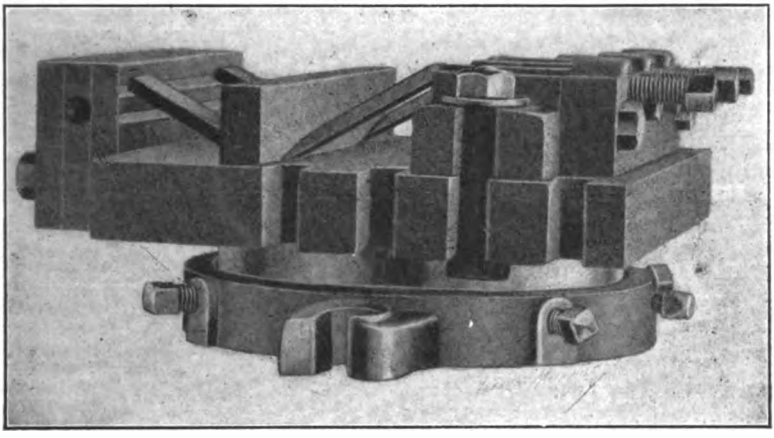

FIG. 516.

the jaw is screwed up it tends to force the work down rather than up. This arrangement admits of planing very thin work without blocking it up.

By light firm taps of the hammer, in which the hammer is not permitted to rebound, the experienced workman can overcome the difficulty referred to in the use of the common vise. By pulling strips of tissue-paper placed under the ends of the work, he is enabled to ascertain when the work is properly *bedded*. If the vise-jaws are not square it may be necessary to use paper or tin between the jaws and the work to square the latter.

Holding Work by Pins and Stops.—The principle employed in connection with Fig. 516 is also used in clamping work without a vise. In Fig. 517 is shown a piece of work held to the planer-table in this manner. The stops *S* closely fit round holes drilled in the planer-table, and by tightening the set-screws in connection with the pins *P* the work is forced down against the table. These pins are usually made of $^3/_8$- to $^1/_2$-inch round tool steel, having hardened conical points at each end. The set-screws are countersunk, the angle being greater than the points of the pins. If the work be inclined to tip on one side, lowering the point of contact between the work and the pins on that side will tend to bring it down.

These pins should not be relied upon to take the *thrust of the cut.* For this purpose long and short planer stops like *S* 1 with or without the set-screws are commonly used. These stops are sometimes made with the set-screw holes parallel with the planer-table, two or three

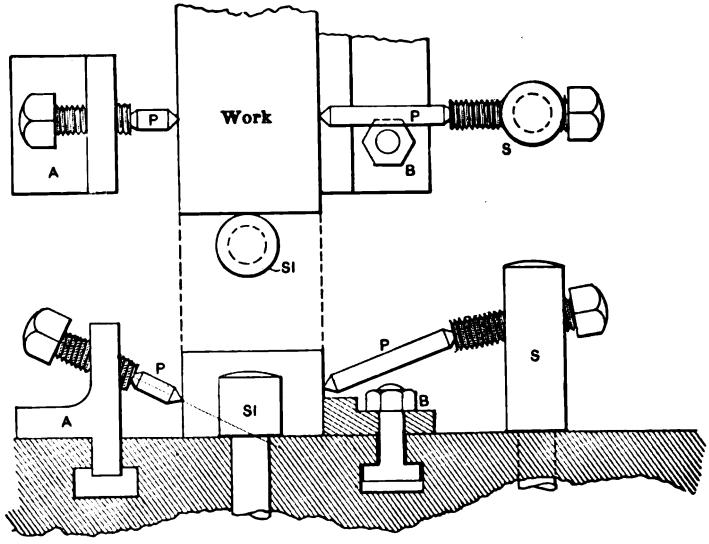

FIG. 517.

holes being provided in the longest stops. When thus made they can be used as adjustable stops to take the thrust of the cut, or by turning them so as to bring the set-screw out of the way they may be used without the adjustment. At *A* is shown a device which may be used (in connection with pins) in the T slots instead of the round stops. These may be made about $^7/_8$″ thick and about 3″ long in the direction of the planer length. It is well to have both kinds.

At *B* is shown a small *angle-plate* having a tongue to fit in the slots of the table. In some cases work may be clamped with one edge against the angle-plate *without any pins*, the pins on the other edge of the work holding it down. In this case the points of contact between the pins and the work should be raised so that the points of pressure shall fall approximately in a line extending centrally along the base of the work.

The V blocks, straps, bolts and angle-plates, shown in connection with drill-press work, boring-machine work, etc., may be used in clamping work on the planer. Special V blocks are shown in Figs. 581 and

592, and a very convenient strap is described in connection with Fig. 585. V blocks and special fixtures for the planer should usually have a tongue fitting the central table slot, and the upper part of such fixtures should be planed while the fixture is clamped in the slot.

In planing light work on the planer, and, indeed, most work that requires accuracy, it is necessary to rough-out the work all over before taking the finishing cuts. The pressure of the straps or pins should be *barely sufficient to hold the work* when the final cut is made, otherwise the work may be warped. The work should be firmly held for the roughing cuts and just before the final cuts are taken the pressure of the straps should be relieved.

Blocking-up Under the Work.—In planing a rough casting or forging, even when the base of the latter is nominally flat, it is usually necessary to block up under the work with tin, paper, etc. Good judgment is necessary in doing this to avoid warping or springing the work. Take, for instance, a piece of rectangular plate, say 12″ wide by 24″ long. In blocking up this work two corners diagonally opposite should be taken care of first. When these are properly leveled up with the "surface gage" (see Fig. 35), the other two corners may be blocked up in a similar manner. If, however, the casting is of such a design as to be appreciably sprung by its own weight, it may be necessary, in order to balance the weight, to put the first blocking some distance from the ends. After this is done, the work may be blocked at intermediate points from about 4 to 16 inches apart, depending upon the length and shape of the piece.

Some otherwise good workmen use very poor judgment in "bedding" work on the planer. They seem to think that anything that will fill up the cracks will answer. This is a mistake. If the work be blocked or bedded with strips of tin which are *bent out of shape, these will "give"* under the pressure of the straps, *causing the work to spring* out of shape. To avoid the same difficulty any fine lumps of sand or scale left on the casting by the foundryman should be "rasped" off with an old file. Small narrow strips of tin and sheet iron hammered true and having the ragged edges filed off should be used. In addition to these, the workman should collect small blocks of cast iron, parallel blocks and jacks. Common bolts with one or two nuts on the end may be used for jack-screws in the absence of a better device. *Adjustable parallel blocks* like those shown in Fig. 518 are very useful in blocking up finished work on the planer. The cut was made after a design by Fred I. Getty, which was illustrated in "American Ma-

chinist," May 8, 1886, page 6. However, the author used a slightly different design previous to the above date.

Planer Tools and Work.—The principles governing the shape of planer-tools being in the main the same as those which apply to lathe-

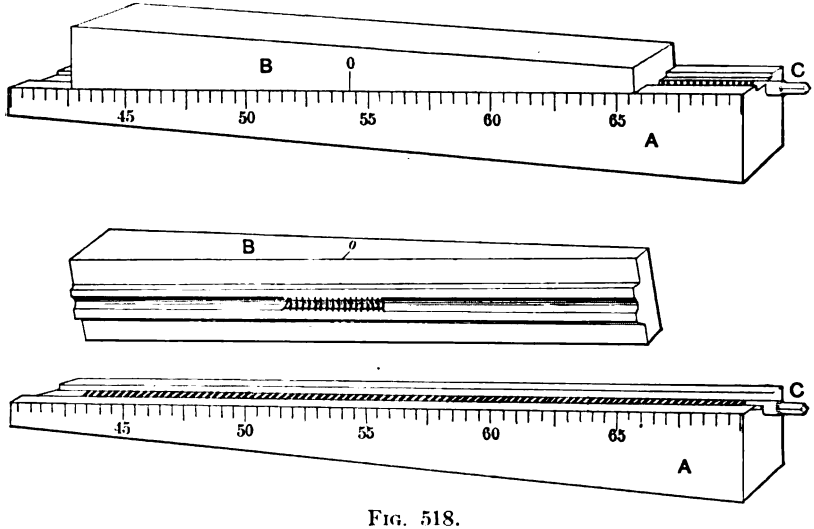

FIG. 518.

tools, the two classes of tools have been treated in one chapter. Figs. 300, 301, 302, and 311 in that chapter indicate methods of doing certain kinds of planer work. One principle which applies to the use of tools having a broad bearing should be emphasized, namely, that such tools if held on the tool-apron chatter less and work better otherwise, when so made that the spring of the tool and freedom of the tool-apron pin cause the tool to move from the work rather than toward it. This principle requires that the tool have a backward offset, as shown in Fig. 311.

The capacity of the planer for doing work rapidly is not understood by the majority of mechanics. With a planer sufficiently rigid and tools properly constructed, surprisingly wide cuts may be taken. Fig. 519, which illustrates an article in the "American Machinist," vol. 27, page 41, shows a broad-edge tool planing the flat surface between the V's on a lathe-bed. This tool is held in a special holder which is gibbed to the guides of the tool-slide in the same manner that the tool-slide itself is gibbed. To make room on the guides the tool-slide is raised to its highest position, the holder being connected to the regular tool-

apron by a link as shown. Thus connected, the tool-holder may be fed down with the tool-slide screw.

Top and front views of the holder are shown respectively in Figs. 520 and 521. The broad tool is held by three bolts, and a slight adjust-

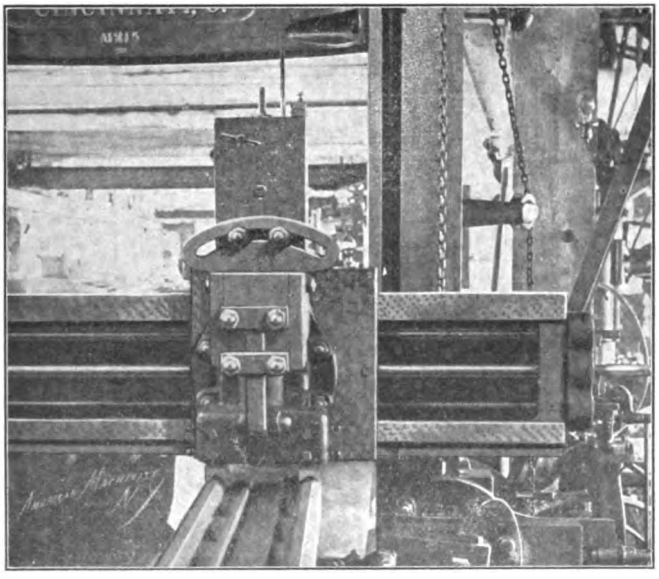

Fig. 519

ment is provided by two set-screws. Being independent of the tool-apron pin and set well back of the latter, the tool does not need to be bent backward. As will be seen, it is placed at an angle of about 30° with the cross-rail, thus giving it a shearing cut. This arrangement, together with the extra rigidity secured by placing the tool nearer to the cross-rail, overcomes the tendency toward chattering and contributes to general smoothness of action.

The above tool was used on cast iron, but steel is sometimes planed very smoothly by giving the tool a *shearing* cut. However, the edge of the tool is only about 1″ wide and is rounded so as to touch only in the middle, a fine feed being used.

Planing Curved Work. — Although the planer and shaper are designed mainly for plane surfaces, round work, irregular forms, and even gears may be cut on both machines. Referring to Fig. 522, *T* represents the planer-table and *C* and *C* 1 planer-centers. These

are something like the head- and tail-stock of a lathe. The hanger *B*, which obviously cannot well be turned in the lathe, is driven on the mandrel *M* and placed between centers. For each stroke of the planer, *B* is, by means of the handle *H*, caused to move around its axis a small

FIG. 520.

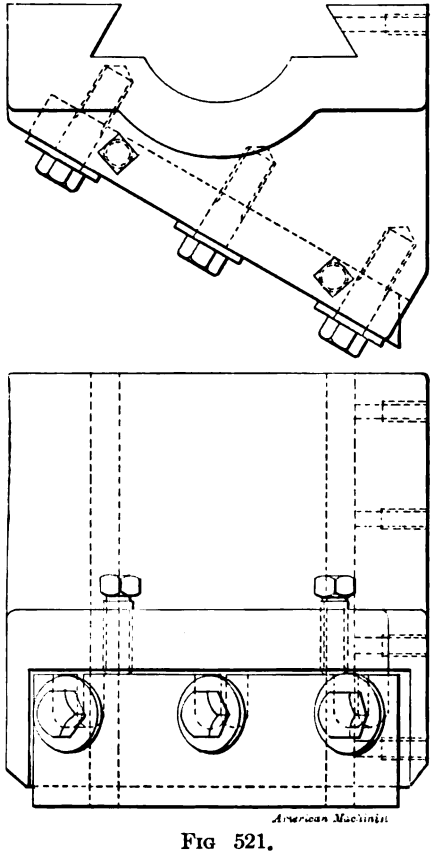

FIG 521.

fraction of a revolution. *H* gives motion to the spindle in *C* by means of the worm-gearing shown. When the hanger is rotated the pin *P* must be withdrawn. This process of feeding the hanger to the tool is continued for each successive stroke of the planer-table until the work is finished.

This method can be used in the shaper also.

"The Concave Attachment."—The object of the attachment shown

in Fig. 523 is indicated by its title. The movement of the ram causes the lower lever to swing in an arc. This actuates the pawl and ratchet

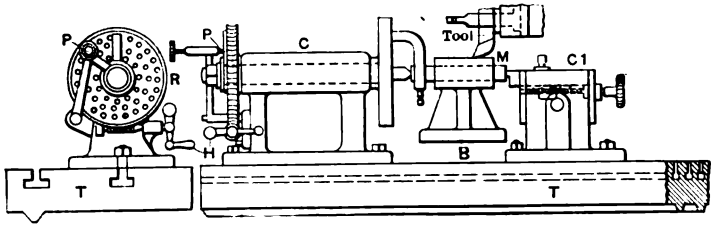

FIG. 522.

mechanism, which by means of the spur- and worm-gearing shown gives the circular movement to the tool. This device cannot be used on the planer.

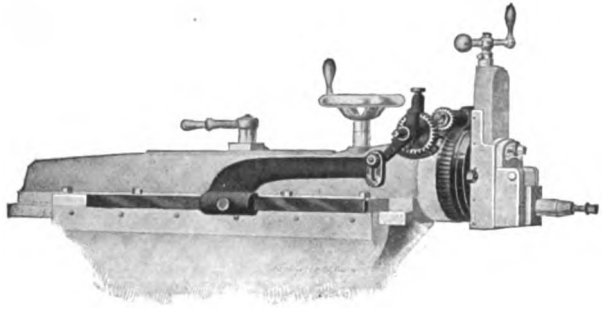

FIG. 523

The Convex Attachment.—Referring to Fig. 524, it will be seen that the table of the shaper is removed and a device having an arbor with two cones is bolted in its place. This is a circular attachment for round and convex surfaces. The work is held on the two cones just the same as in the case of the arbor for tapering work shown in Fig. 359. This attachment has automatic feed, which is operated substantially in the same manner as the table. The principal difference is that the worm and worm-wheel are used in place of the screw and nut.

Planing Irregular Forms.—The attachments mentioned above are designed more particularly for round work or regular curves. The *former* principle, as was stated in the chapter on lathe work, may be used in machining either regular or irregular curves. In Figs. 525 * and

* Figs. 25 and 526 were copied from cuts used in connection with an article by "I. W." in "American Machinist," April 21, 1892, page 6.

526 is shown the end of a round rod which is widened and flattened at *E*, the two elements being joined by a curved surface. The work in this case is to be machined on both sides of the flat end, and to facilitate the operation the work is held between planer-centers. As in the case of

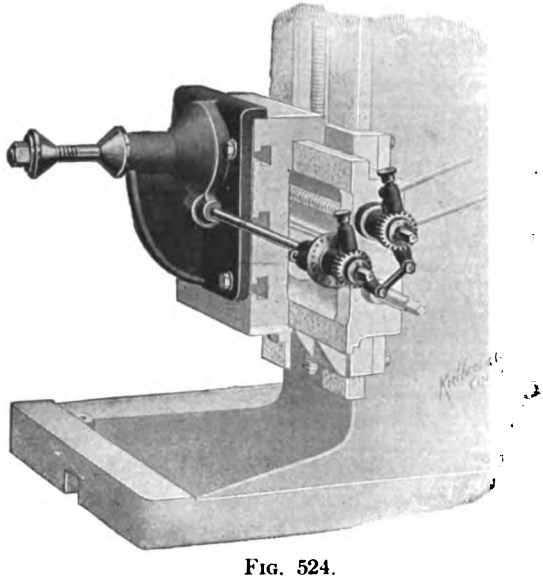

FIG. 524.

lathe work, the screw by which the tool is fed to the work is removed, the movements of the tool being controlled by the former shown. To force the tool to follow the curved form, the bracket *C* is bolted to the tool-box, and in the projecting arm of this bracket is a bolt *D*, on the lower end of which is a roller, or some equivalent, in contact with the former. To adjust the tool for a deeper cut the set-screw holding the bolt *D* is loosened and the nut tightened. The tool-slide is weighted down at *A*. The weight at *B* is designed to balance the pressure and prevent the cramping of the tool-slide in its guide

The *former principle* may be applied also when the curved surface lies crosswise the planer. In this case the former may be fixed to the cross-rail or to the housing.

It should be understood that the curve produced by the method above outlined *will not be a duplicate* of that of the former. The difference arises from the difference in shape between the point of the tool and the roller. This is well understood by mechanics who have had experience

in laying out cams. For the benefit of the inexperienced, the following, from an article in the "American Machinist," April 21, 1892, page 2, by Fred J. Miller, is given. As suggested by Mr. Miller the form in the

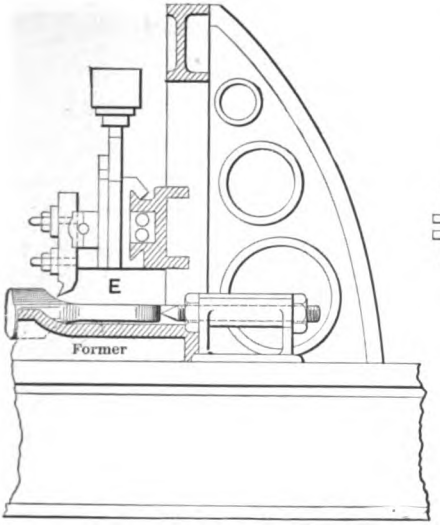

FIG. 525.

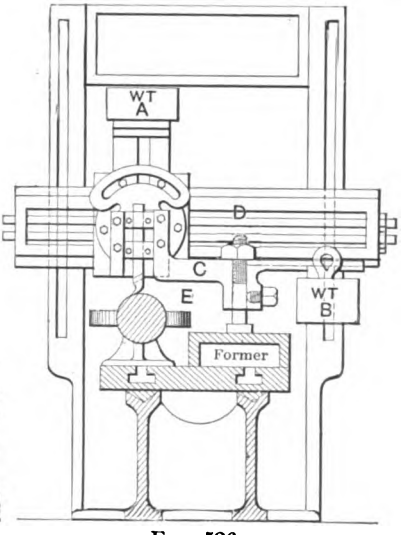

FIG. 526.

accompanying illustration is of such abrupt curvature as would be difficult of duplication on the planer, but Mr. Miller takes an extreme case in order to show the principle more clearly. He says: "Having

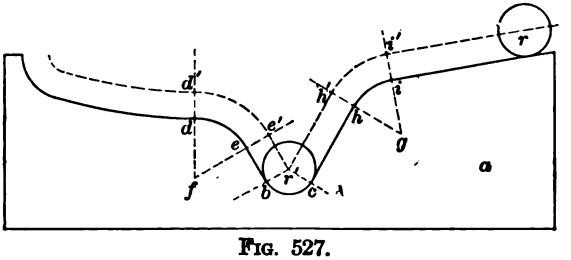

FIG. 527.

shown that a template of the exact form of the work will not reproduce itself, the question is how we shall determine the form of template to produce a given form. To do this we have only to lay out the form of the work, and having decided the size of the roller we are to use, draw another line parallel to the first and at a distance from it equal to the radius of the roller. Suppose, for instance, we wish to reproduce a

form corresponding to that of the template *a*, Fig. 527. We draw a line *ab*, Fig. 528, of the desired form, and taking many points on this

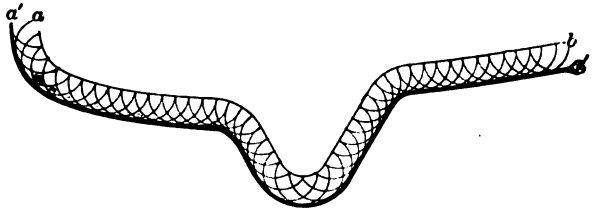

FIG. 528.

line as centers, we strike arcs as shown, the radius of these arcs being equal to the radius of the roller we are going to use. A line *a'b'* drawn tangent to all these arcs is the desired form of template."

A number of different methods of planing irregular forms are shown in "American Machinist," vol. 27, pages 512 and 544.

Cutting Gears in Planer and Shaper.—Fig. 529 shows a method of cutting teeth in gears. For this purpose the index-plate *R* has several

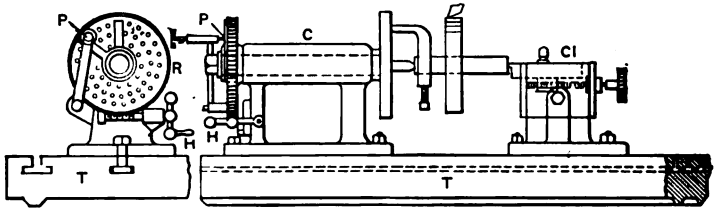

FIG. 529.

circles of holes answering to various numbers of gear-teeth. If we wish to cut 20 teeth, the pin *P* is adjusted to the circle of 20 holes. Having tightened the cross-head to prevent lateral movement, the tool is next fed downward until the first space is cut. We now stop the planer, pull the index-pin out and turn the index-plate (and gear) $^1/_{20}$ revolution for the next space, continuing the process until the gear is finished.

Cutting Rack-teeth.—Fig. 530 illustrates an article by the author in "American Machinist," March 31, 1904. Referring to the figure, *R* is a cross-section of the toothed ram belonging to the arbor-press shown in Fig. 367. The ram was held crosswise on the planer-table by the straps *S*, parallel block *B* (also strapped to table), and pin *P*. The pin was driven into the ram to resist the tendency of the latter to roll. Having firmly secured the ram, the teeth were next roughed out with a common

square-nose tool, the straps being alternately changed when approached by the tool in its movement across the table. To finish the teeth a B. & S. four-pitch rack-cutter was bolted to a bar of steel, the latter being held in the tool-post as shown. The side of this bar was planed by securing a tool to the table and feeding the bar to the reciprocating tool.

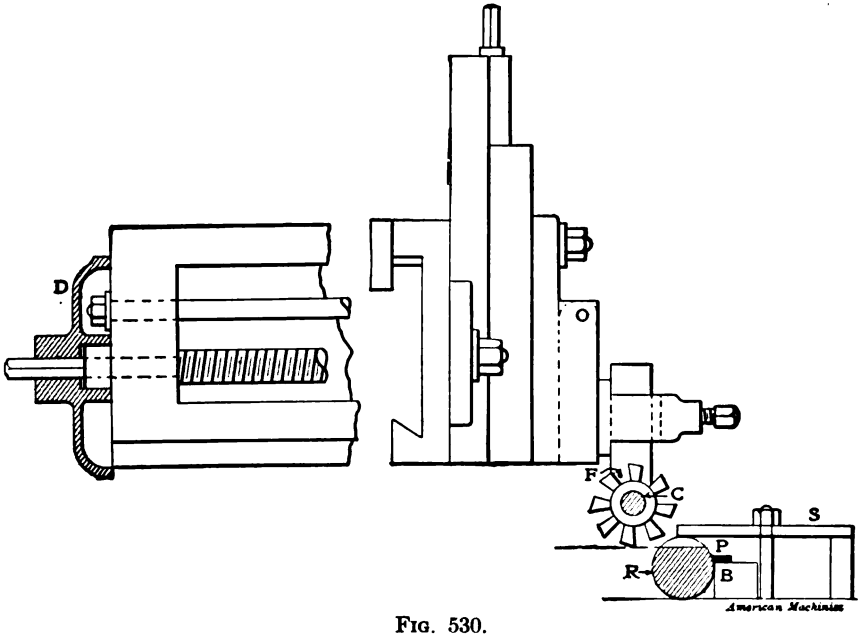

FIG. 530.

The most important part of this apparatus is the disk *D*, by which the rack-teeth were spaced. This was made for the job, but has since been used in cutting other racks. The periphery of the disk is divided by 250 lines. As the planer-screw is $^1/_4$″ lead, each division on the disk represents .001″, and .0005″ can be measured by estimation. In spacing the teeth, the tool had to be moved .7854″ (practically .7855″). The stopping-point on the disk for each spacing was indicated by making a light line, in a "touch" of red lead, corresponding to the zero-line on the cross-rail. Thus *.7855″* was measured from a new starting-point for each tooth.

With a more expensive fixture the cutter could of course be made to revolve, and thus *mill* the work.

One is justified in using the planer or shaper in cutting gears only when a milling-machine or gear-cutter is not available.

Grinding Attachments for Planer and Shaper.—Fig. 531 shows an attachment for the planer which should prove of great value in many shops where a regular surface-grinder is not available. The bracket carrying the emery-wheel arbor is shown at *B*. It is held on the tool-block or tool-slide by four bolts, and the emery-wheel arbor is driven from an auxilliary countershaft as shown. The latter is driven from

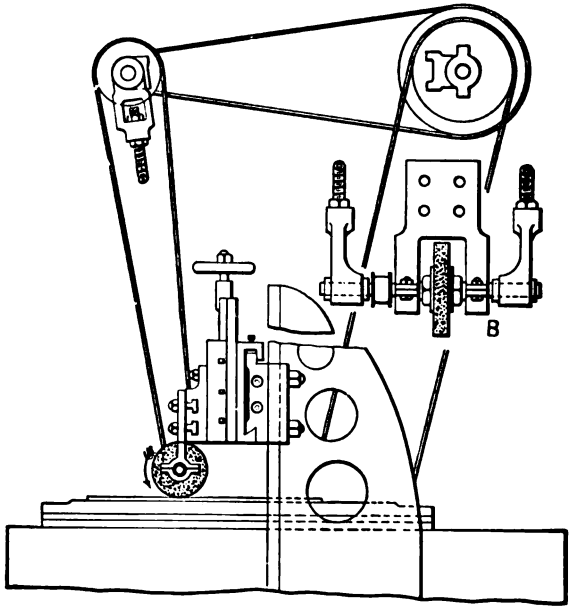

FIG. 531.

the main countershaft of the machine. To provide for the crosswise feed of the emery-wheel, a long pulley or drum is generally used on the auxiliary countershaft of such attachments when work of considerable width is to be ground. The small flanged pulley shown keeps the lower part of the belt in position.

The attachment shown in Fig. 531* was designed to be used either in the planer or lathe. Fig. 532 shows the same emery-wheel and bracket secured to the compound rest of an engine-lathe. The work is that of grinding a narrow-face wheel. In such work the drum on the countershaft is unnecessary.

---

* Figs. 531 and 532 are from cuts accompanying an article by C. H. Alexander in "American Machinist," vol. 26, page 1121.

In Fig. 533 is shown a surface-grinding attachment * for the shaper, and it is also held on the tool-apron. On account of the reciprocating motion of the ram, it is necessary to use a tightener as shown at *D*. This tightener automatically maintains the tension on the belt. Unless the attachment is used on the traverse shaper, a narrow-faced pulley may

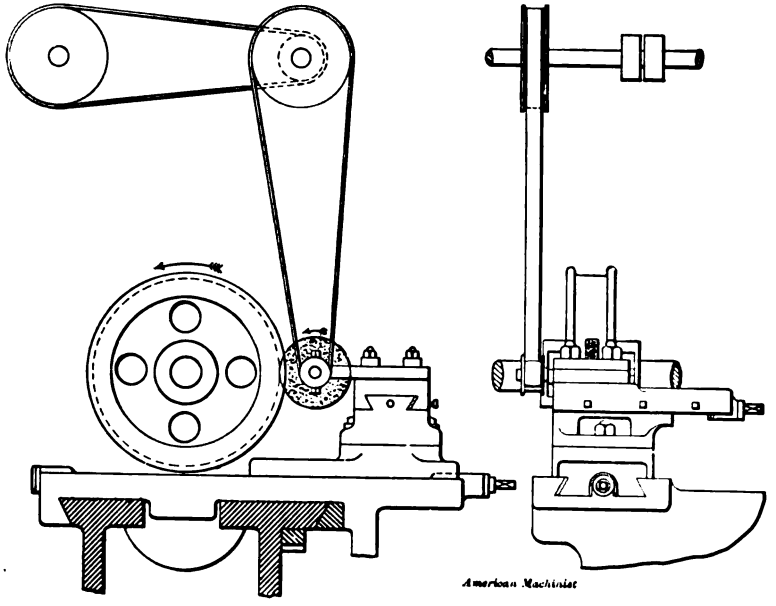

FIG. 532.

be used on the auxiliary countershaft instead of the long drum referred to in connection with Fig. 531.

Care of Planer-table. — The planer-table is *curved or peened* by driving down the stops too hard, by letting heavy work fall on it, by hammer-blows, etc. Not only is the table curved by such usage, but lumps are raised on it which prevent planed work from resting solidly. It is difficult to get the beginner to see that *the smallest bruise or scratch or speck of grit* may cause the last-mentioned difficulty. Before clamping such work it is often advantageous to *sweep* an old smooth file over the table surface in such a manner as to scrape off fine lumps and show

* Fig. 533 is taken from a cut which accompanied an article entitled "The Shaper as a Surface Grinder," by S. Bliss, in "American Machinist," vol. 27, page 595.

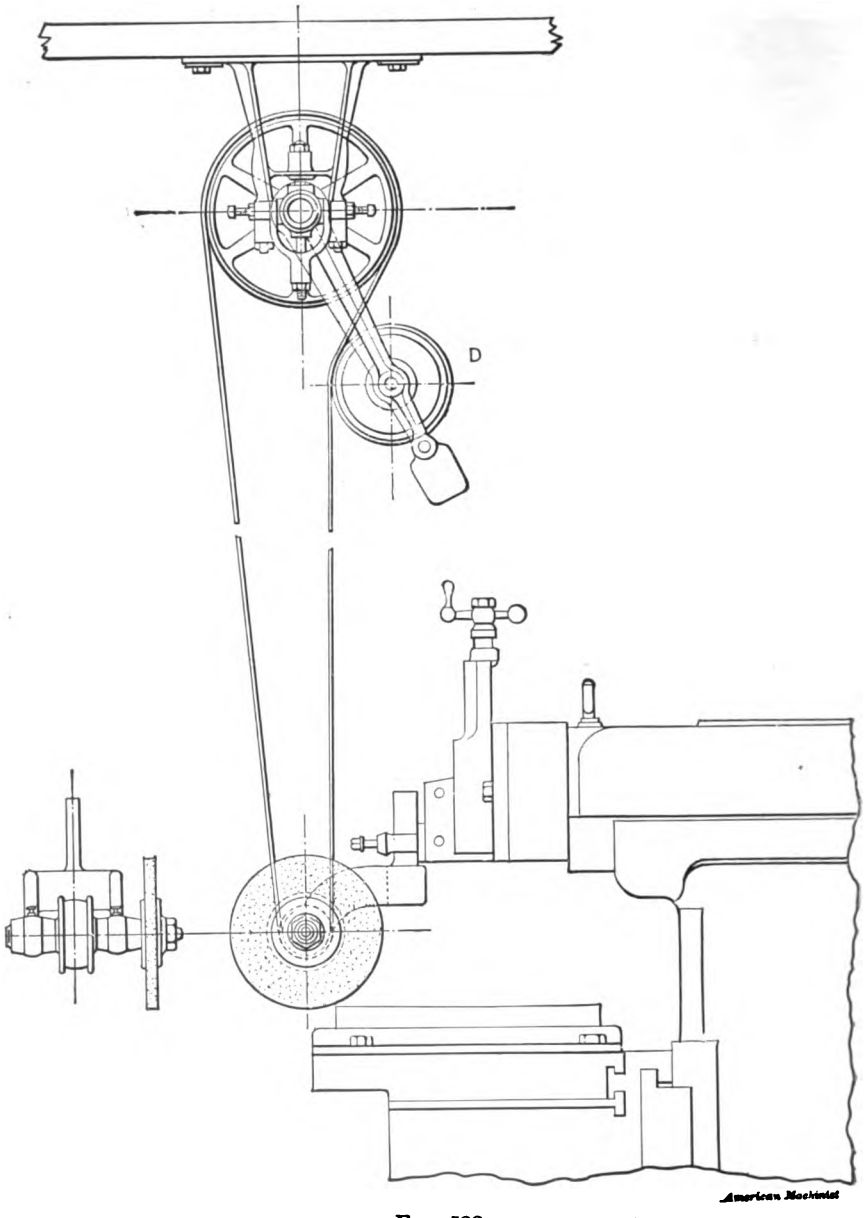

FIG. 533.

up the large ones. After using the brush, fine grit may be best wiped off with the hand.

Testing the Bed.—The planer-table should be planed when necessary. The bed also may occasionally need attention. A method of

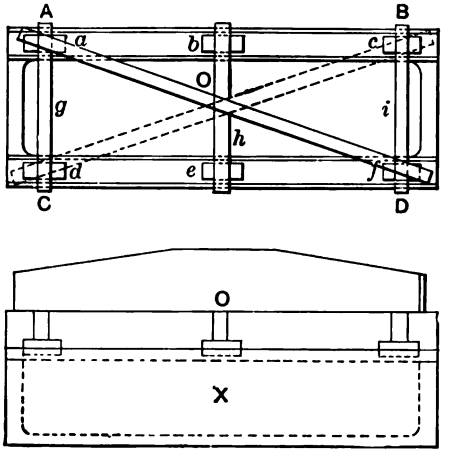

FIG. 534.

testing the V's by using three rollers equal distances apart in each V, one straight-edge or parallel block crosswise on each pair of rollers, and a long straight-edge applied diagonally, is illustrated and described by "Jarno" in the "American Machinist," August 11, 1888. See Fig. 534 for the illustration.

CHAPTER XXIV

SLOTTING-MACHINES AND THE WORK TO WHICH THEY ARE ADAPTED

General Description of the Slotting-machine.—The slotting-machine is similar in principle to the shaper. Its ram, however, moves at right angles to the table, while in the shaper the ram moves parallel with the table. Referring to Fig. 535, *B* is the bed cast integral with the upper column *C*; *T* the table; *R* the ram; *P* the driving-pulley; *G* the driving-gear; *C* 1 the slotted crank connecting with *R* by the connecting-rod *R* 1; *F* and *F* 1 the table-feed gears; *C* 3 a cam on *G* for operating the feed-gearing; and *W* the counterbalance for *R*.

Table and Ram Movement.—The table has two movements at right angles in a horizontal plane, and also turns about its axis. These are all automatic and intermittent movements effected by the feed mechanism *C* 3, *F*, and *F* 1. The table may also be moved in all the directions by hand by means of cranks on the several table-shafts. The ram movement may be increased or diminished for different thicknesses of work by the slotted crank. The cutting-tool is secured to the lower end of the ram. The operation of the ram by means of the driving-pulley *P*, gear *G*, etc., will be understood without further explanation.

Character of Work Done on the Slotting-machine.—In machining a piece of work which is required to have its sides at right angles, the work is bolted to the table, and by means of the two right-angular movements of the table the four sides of the work are finished with but one adjustment of the work on the table. If the bolts which hold the work on the ends, for instance, are in the way when machining the ends, other bolts are placed on the two finished sides before removing the bolts on the ends. More adjustments would be required if the same piece of work were machined in the shaper or planer, and an offset-tool would be needed for the interior of a rectangular shape.

Much of the short stocky work done on the shaper could be done on the slotter, but the slotter is specially adapted to cutting various shaped slots, to finishing the interior and exterior of curved surfaces

etc. Among the details which can be machined advantageously on the slotter may be mentioned the fork-end connections for the reversing gear of a steam-engine, the engine connecting-rod straps, the half boxes for locomotive driving-axles, and many kinds of die work. The slotting-machine was formerly used to a great extent in cutting key-seats in pul-

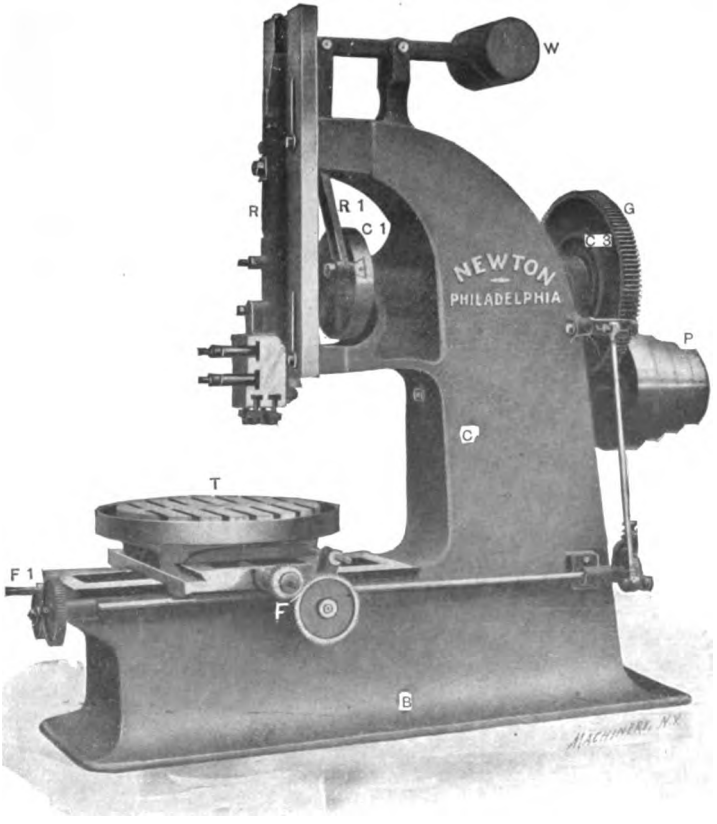

FIG. 535.

leys, gears, etc. For this purpose it has been superseded in a measure by special key-seating machines.

Portable Slotting-machines.—In Fig. 536 we show a portable slotting-machine. This slotter is used on a large base-plate for very heavy work in which it is more convenient to move the slotter than the work. The vertical movement of the tool-head is effected by pulleys, tooth-gear-

ing and a screw, but the machines are also made with a rack and pinion movement. This machine has a limited traverse on its sub-base, and

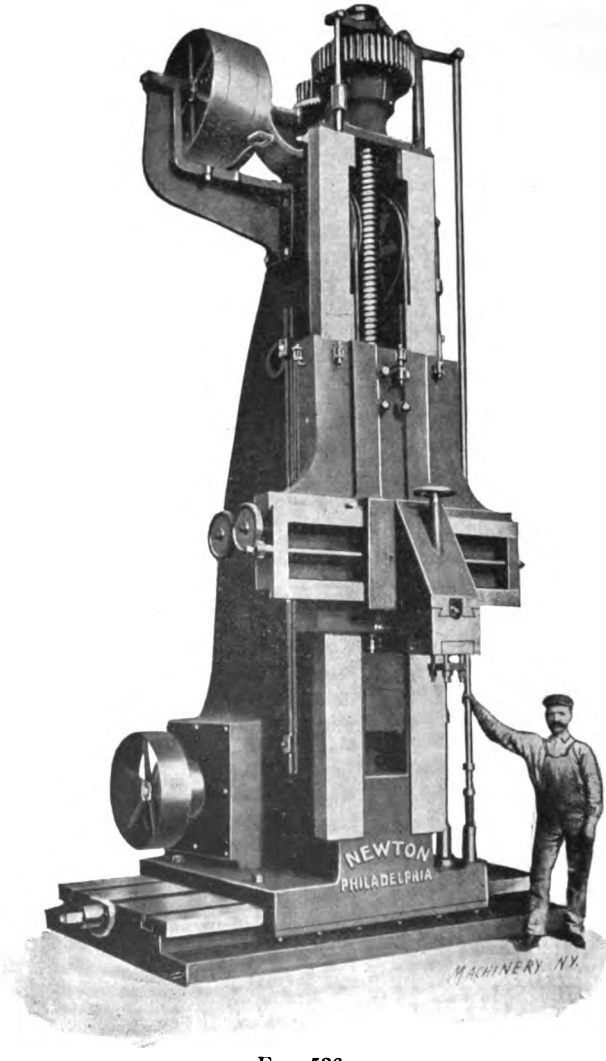

FIG. 536

the tool-block has a movement in the same direction on the cross-rail. It has the usual automatic and hand feeds.

The construction of the machine is such that it is not well adapted

to machining slots and interior surfaces. Indeed, the machine could with propriety be called a vertical planer.

Slotting-machine Tools.—The tool used in machining narrow slots, etc., cuts on its end and is forged on the end of a bar of steel in a similar

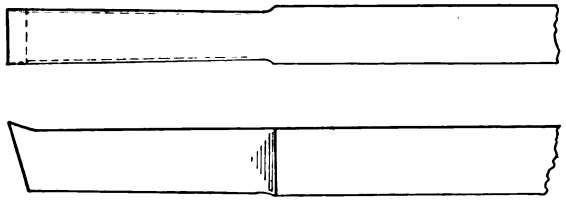

FIG. 537.

manner to a common planer-tool. The cutting angle and clearance of these and all other slotting-tools should be about the same as those of planer-tools, excepting that the direction of these angles should be determined with respect to a vertical plane rather than a horizontal.

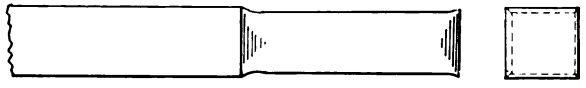

FIG. 538.

Fig. 537 shows the front and side views of a slotter-tool such as has been mentioned. The tool must, of course, be forged down small enough to enter the slot, and in very narrow slots the tool is sometimes made to cut on both the front and rear side, one cut serving to brace the other. In Fig. 538 is shown a square-end finishing-tool which is sometimes used as last described. Having taken the finishing cut on both sides of the slot the ends of the slot are finished separately with the same tools. When the slots are so narrow as to require the tools to be used in this manner the work could usually be done more advantageously in the milling-machine. Some mechanics make slotter-tools for fillets of circular cross-section at the cutting-end. The shapes of the cutting-edges for the roughing-tools are determined on the same general principles which apply to lathe- and planer-tools.

In Figs. 539 and 540 is shown a rotary tool-holder which we shall presently describe. The lower part of this tool, which is shown broken from the upper part, represents the slotter-tool commonly used for exterior slotting, and also for interior when the opening is large enough to admit such a tool. The tool T is held by two set-screws in a block

which is pivoted to the bar at P. The spring S tends to hold the block in proper relation with the bar, but on the return-stroke this spring

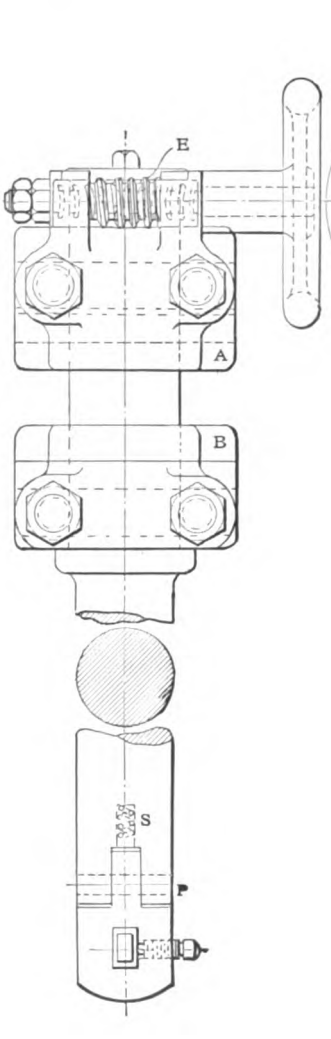

FIG. 539.

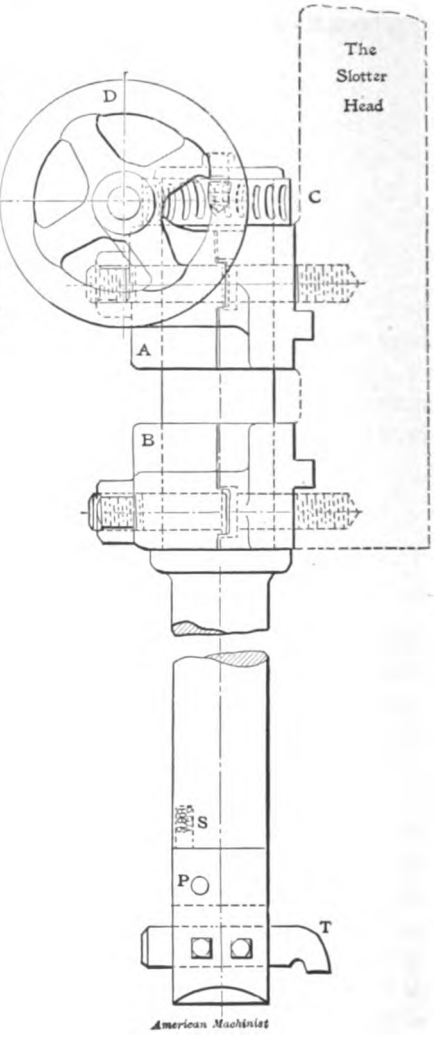

FIG. 540.

permits the tool to rock slightly on the pivot P, and thus relieve the wear that would otherwise occur. If the tool be secured directly to the bar, as it sometimes is, there must be considerable pressure and consequent wear during the return-stroke.

The slotting-tool shown in Fig. 541 is somewhat similar to the lower end of the tool just described. The cutting part of the tool, however, is held in the block at an angle, giving it the proper rake for free cutting.

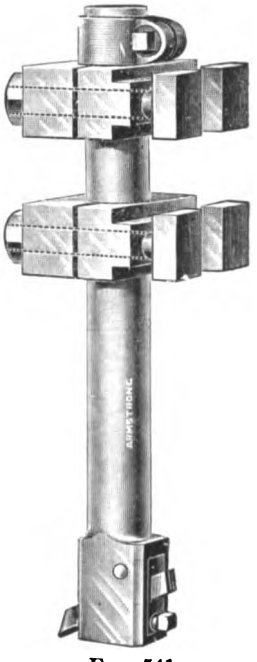

FIG. 541.

A Rotating Tool-holder. — Some slotting-machines are made without provision for rotating the table. In such a machine the tool-holder shown in Figs. 539 and 540 could be used for curved surfaces of small radii. Referring to the illustrations, the boxes *A* and *B* are held to the slotter-head or ram by four studs as shown. The upper part of the bar is turned to fit the boxes and also to fit the worm-wheel *C*. The bar is rotated by the hand-wheel *D*, which operates the worm *E* meshing with *C*.

This tool, however, was primarily designed for finishing fillets and other curved surfaces on large framework, which cannot be rotated on an ordinary slotting-machine. It is fully described by T. B. Burnite in "American Machinist," vol. 27, page 125.

CHAPTER XXV

KEY-SEATING MACHINES AND KEYS

Key-seats and Key-fitting.—Before describing the key-seating machine it will be necessary for the benefit of the younger student to explain what a key is. In Figs. 542 and 543, which show a pulley

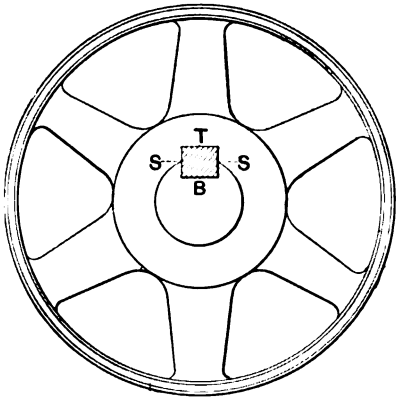

FIG. 542.

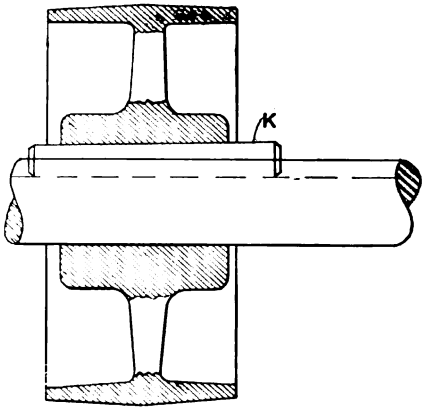

FIG. 543.

keyed to a shaft, *K* is the key. The rectangular grooves cut into the pulley and shaft are called key-seats or keyways.

In this connection it may be well to consider the method of fitting keys. Some machinists think a key should fit best at top and bottom (*T* and *B*); others prefer to have it fit best on the sides, as at *S*. In important cases the key should fit well on both sides, and at top and bottom. Sometimes set-screws are placed in the hub of the pulley so as to press on the top of the key; this obviates the necessity of close-fitting at this point. A key should not be filed so as to have a tight bearing at top and bottom on one end and miss on the other end. Such fitting is likely to force the pulley slightly out of square with the shaft. Keys which are to fit at the top and bottom are usually tapered on the

top from $^1/_8$ to $^3/_{16}$ inch per foot. They are never tapered on the sides, and when held by set-screws are not tapered on top.

In shops where very little key-seating is required the work is sometimes done with the chisel and file, but where a great deal of key-seating

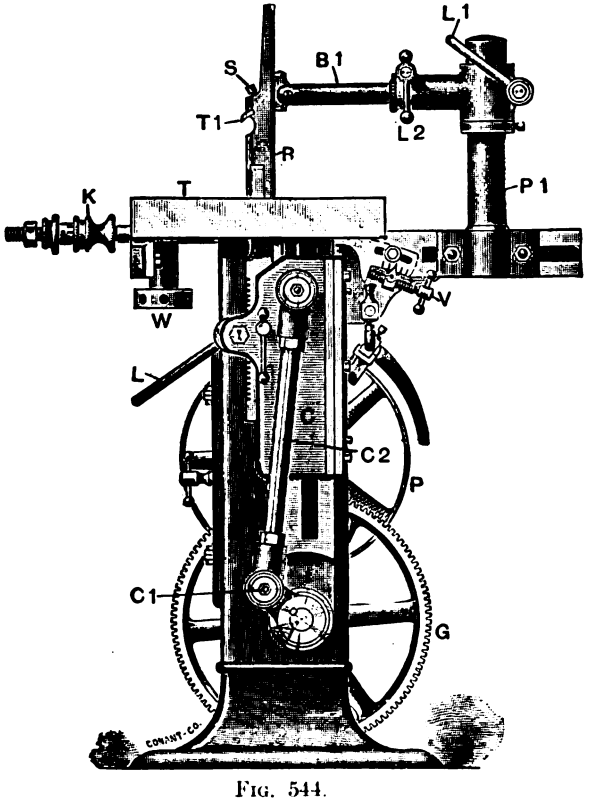

FIG. 544.

is required it pays to purchase a key-seating machine. Key-seats in the shaft may be cut on the milling-machine, planer, or shaper.

There has recently been introduced a system of keys of the shape of a sector of a circle, the top of the key being of exactly the same shape as those shown in the illustration. The key-seats in the shaft for such keys cannot be planed, but must be sunk in by a revolving cutter. The key-seats in the pulley may be made by the ordinary process.

Key-seating Machines.—Fig. 544 shows a key-seating machine of modern type. In accordance with the most advanced ideas in machine-tool design the column *B* is of hollow or box form. Working in guides

on top of this column is the table T to which the work is fastened. The tight pulley P (there is also a loose pulley not shown) is on the same shaft with a pinion (not shown) which operates the gear G. Keyed to the same shaft as G is a crank C 1 which, by means of the connecting-rod C 2, operates the cross-head C. The cutter-bar or ram R is secured to the cross-head by a kind of ratchet-cam which is operated by the lever L. T 1 is the cutting-tool held by a set-screw S. To support the bar against the pressure of the cutting, brace B 1 is provided. This is so constructed that it may be adjusted vertically and horizontally by the levers L 1 and L 2, and may be swung around on the post P 1 when work is to be removed.

In cutting a key-seat, the cutter is fed to the work by the hand-wheel W; by the same hand-wheel the cut is relieved on the return stroke. The knob K, which has micrometer adjustment, regulates the depth of the cut; and by means of this micrometer adjustment, any number of key-seats may be cut to the same depth. Key-seats are often made tapering, and for this purpose the table is tilted by the thumb-screw V.

The machine above described is one of the smallest and simplest made, but it shows the principle better than the more elaborate designs.

Key-seating Attachments.—Various small key-seating devices have been designed for use in connection with the arbor-press, with the planer, and with drilling-machines. In Fig. 545 is shown a key-seating attachment for the latter machine. The shank at the upper end is driven by the ordinary drill-chuck, or when made to the Morse taper it is driven in the socket of the drill-spindle. On the end of the same shaft of which this shank is a part are a number of pins which serve as gear-teeth, and which revolve the cutter shown at the bottom of the device by engagement with its teeth. The tool is guided by one of the bushings shown, these being made to fit different sizes of holes, and it is fed in the same manner as a drill. For taper keys the hole in the bushing is made at an angle with the outside. While the inner shaft and cutter revolve, the outer shell is prevented from turning by the horizontal lever at the top.

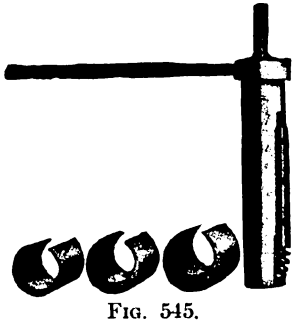

FIG. 545.

For large fly-wheels, large gears, etc., portable key-seating machines driven by power are sometimes used.

CHAPTER XXVI

MILLING-MACHINES AND MILLING-MACHINE WORK

General Description.—The milling-machine probably derives its name from the fact that the operation of the milling-cutter is somewhat suggestive of the old millstone processes. Fig. 546 shows a Brown & Sharpe Universal milling-machine. The frame *A* is of the box form common to machines of this class. Within the hollow frame are shelves for the smaller accessories belonging to the machine, there being a door on the side opposite to that shown in the engraving. The head-stock *B* is cast integral with the frame. Journaled in the head-stock is the spindle, the end of which is shown at *C*. The spindle of this machine is not driven by a cone pulley, but by a system of gearing which we shall presently describe.

The bracket-shaped casting *D* is called the knee. It is movable vertically and guided by planed surfaces on *A*. This movement is effected by the hand-wheel *E*, which, by means of bevel-gearing, operates the telescopic screw *F*. The construction of the latter is such that no hole is required in the floor to receive the screw when the knee is in its lowest position. Supported on top of the knee are three members, of which *G* is called the clamp-bed, *H* the saddle, and *I* the table. *G* can be moved on *D*, parallel with the spindle *C*, by the hand-wheel *J*. This hand-wheel operates a screw working in a nut secured to *G*. The table *I* slides in the saddle *H*, for most purposes at rigth angles to the spindle; but inasmuch as *H* may be swiveled on its graduated base, *I* may be fed at various angles with the spindle. The dividing head *K* (otherwise called the spiral head) and the foot-stock *L* are bolted to the lathe.

The long shaft *M*, together with its pendent arm *N*, is called the overhanging arm. The smaller cutters are carried on an arbor which has a tapered shank to engage with the tapered hole in the spindle, and the object of the overhanging arm is to support the outer end of the arbor. When extra-heavy cutting is being done, the arm itself is tied to the clamp-bed by the slotted links *O*, which are called harness, or braces. The work

is secured either directly or indirectly to the table, and is fed to the revolving cutter by hand or by power.

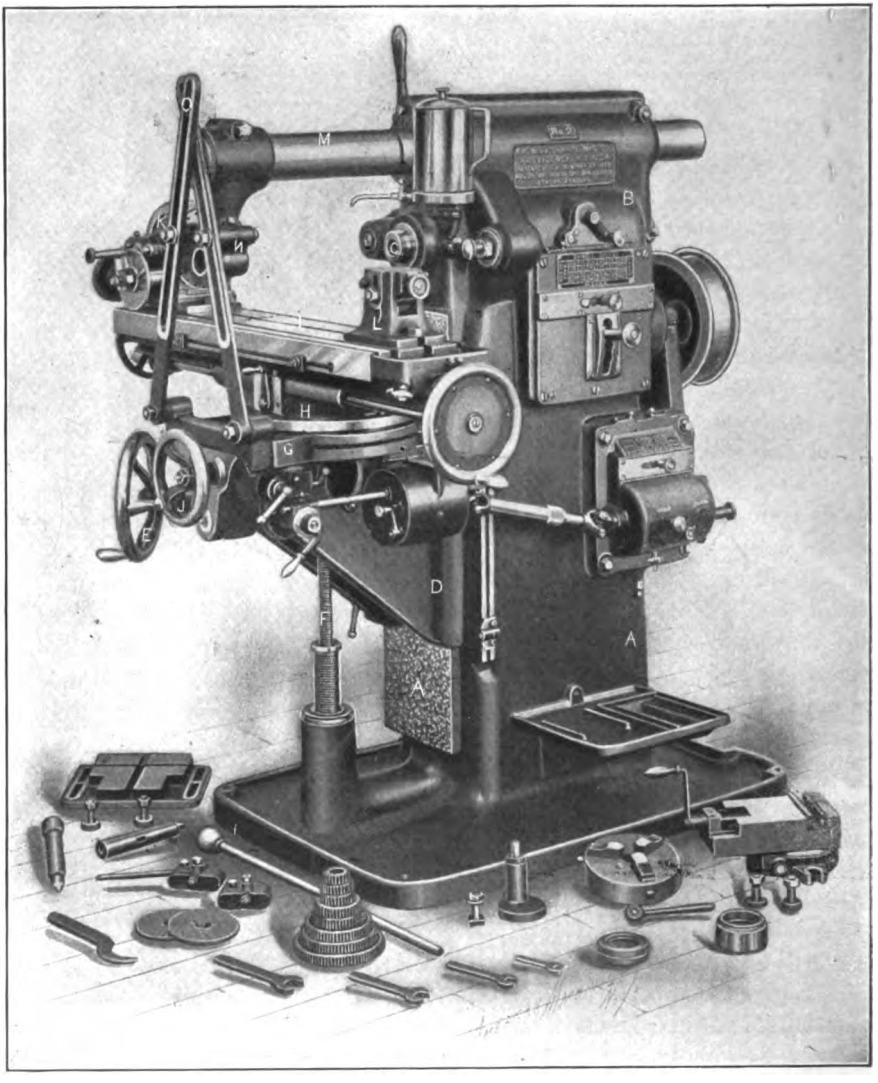

FIG. 546.

The Driving-gear.—Fig. 547 is a sectional view showing the driving-gear, and Fig. 548 is an end view showing the gears in dotted lines. The

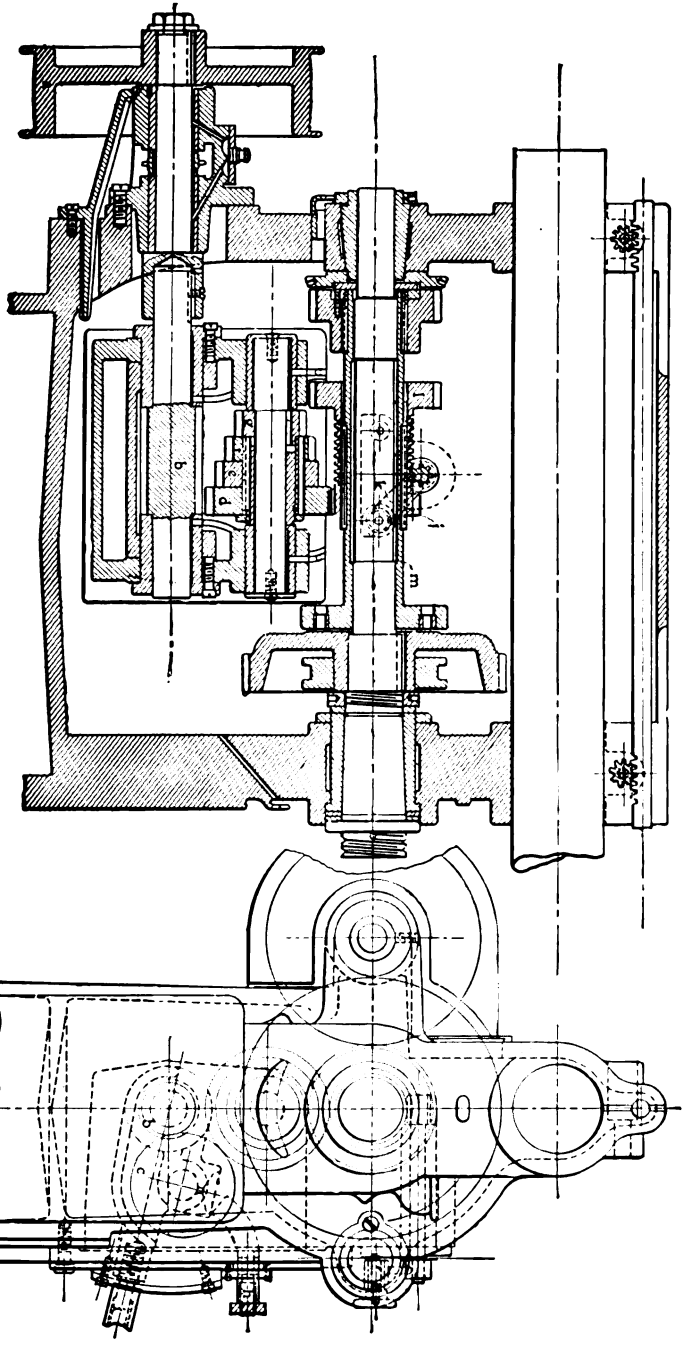

FIG. 547.

FIG. 548.

first gear in the system is a long pinion *b*. This runs at a constant speed, being driven by the pulley *a*. Meshing with *b* is an intermediate *c* (Fig. 548) which by levers *h* and *i* may be brought into mesh with *d*, *e*, *f*, or *g* (Fig. 547), giving four different speeds to the shaft bearing these four gears. By means of the lever *k* either *j* or *l* may be brought into mesh with one of the four gears, thus multiplying the number of speeds by two and giving eight speeds. The levers *k*, *h*, and *i* are the upper, middle, and lower levers shown at the left of the flanged pulley in Fig. 546.

Back-gearing.—The design of the back-gearing is similar in principle to that ordinarily used, but the details are quite different. The gears

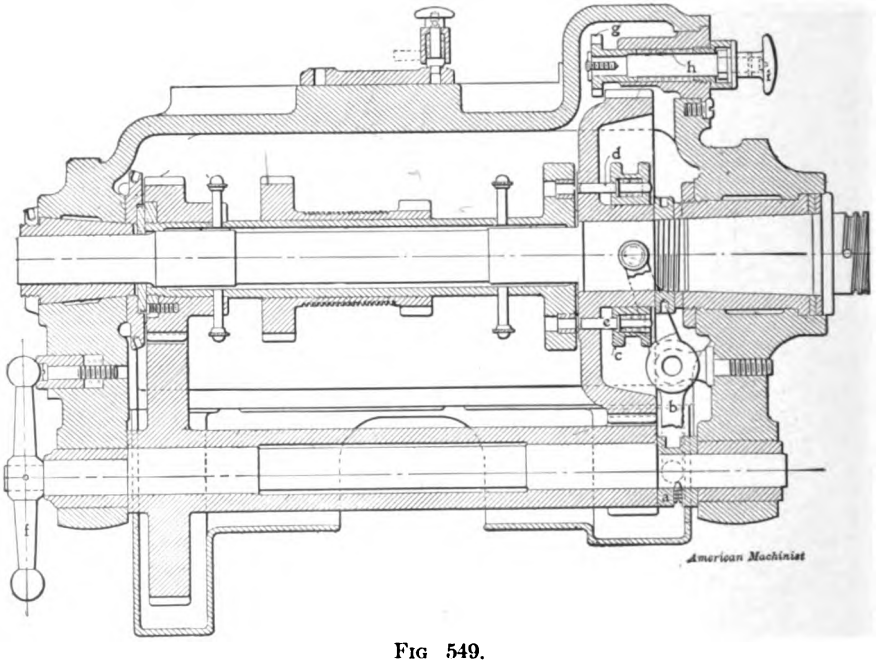

FIG 549.

j and *l* of Fig. 547 are keyed to the quill *m*, upon the left end of which is a pinion answering to the pinion commonly secured in the end of a cone pulley. Integral with *m* at the right hand is a flange to which the usual large gear of the main spindle is locked when the machine is in single gear. The locking-pins are seen at *d* and *e* (Fig. 549). When by means of the lever *f*, the back gears are brought into mesh, a cam at *a* on the back-gear shaft moves, through the lever *b*, a collar *c*, thus

withdrawing the locking-pins. When the back-gears are disengaged, small springs pressing against the locking-pins *d* and *e* are compressed, causing these pins to enter the sockets in the flange during the first revolution of the spindle. Thus the locking-pins are automatically engaged or disengaged by the back-gear lever.

By the back-gears the number of speeds is again multiplied by two, giving the machine sixteen spindle speeds.

Feed-gearing.—Referring again to Fig. 546, just below and to the

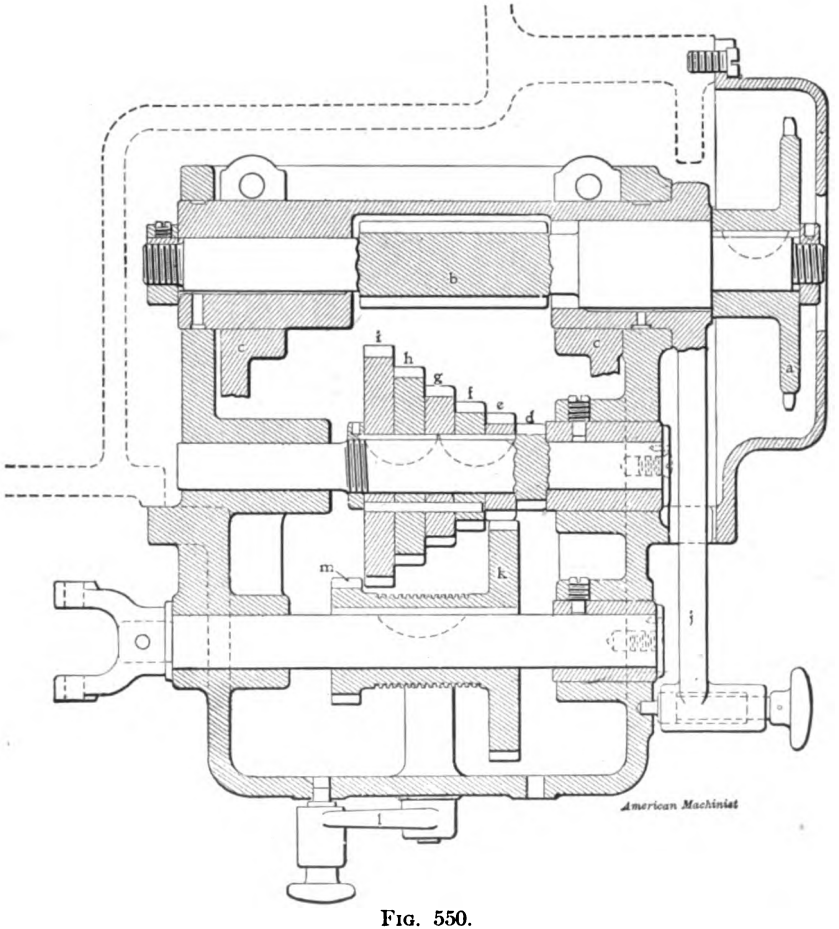

FIG. 550.

left of the driving-pulley is seen the *feed-box* and gears, a sectional view of which is shown in Fig. 550. The sprocket *a* is driven from the pulley-

shaft through a "pitch chain." On the same shaft and driven by *a* is the long pinion *b*. This pinion, through a shifting intermediate gear (not shown), drives the cone of gears *d*, *e*, *f*, *g*, *h*, *i*, two of which alternately engage with the shifting gears *k* and *m* and drive the universal-joint shaft. Thus ten different feeds are given, the mechanism being similar to the main driving-gear with the back-gears omitted.

Motion is communicated from the feed-gearing to the work-table by means of mechanism consisting principally of the telescopic shaft shown

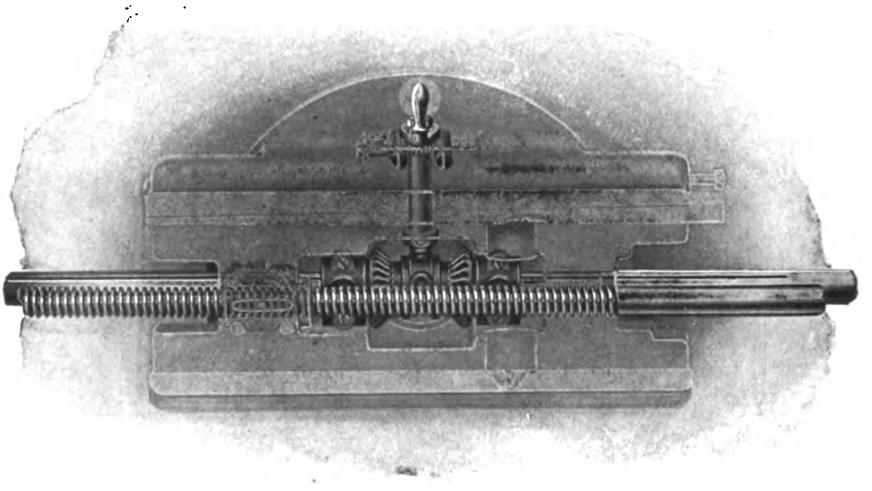

FIG. 551.

inclined toward the feed-box in Fig. 546, suitable gearing, and a screw. The latter is shown in connection with the saddle in Fig. 551.

Plain Milling-machine.—In one of its principal forms the plain miller is in general similar to the machine just described. The main difference is that the plain miller has no clamp-bed, the table being guided in ways in the saddle, which is clamped directly to the knee. The table of the plain miller, therefore, cannot be fed at any other angle than a right-angle with the main spindle. Fig. 552 shows a plain miller designed in 1897, in connection with a class in machine design, of which the author was instructor. A knowledge of the friction mechanism employed in this machine may be of some value to the student. The friction-disk shown at *D*, the *driving-face* of which is covered with *leather*, was used to a greater extent in machine-tool construction when this machine

was designed than it is at present. This disk is driven by the gears *G*. The small *cast-iron* pulley which is shown near the middle of *D*, and which is driven by the latter, gives motion to a train of gears some of which are seen inside the knee. The last of these gears, a miter, by meshing with two miter-gears on the table-feed screw, gives the table a forward or reverse traverse, depending upon which gear is in engagement with the shifting clutch. This reversing mechanism is similar in principle to that shown at *g*, *h*, *i*, *j*, in Fig. 221. In some milling-machines the table is driven by pinion and rack.

The small friction-pulley runs in a sleeve which has rack-teeth cut on one side. A pinion meshing with this rack is rotated by the hand-

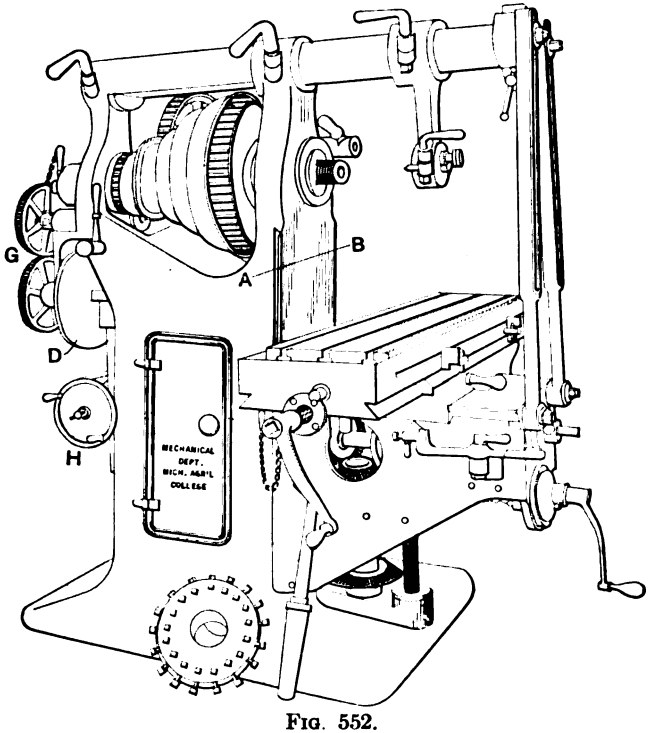

FIG. 552.

wheel *H*, and thus the pulley is moved from the center, or zero position of the disk, to the periphery, or position of maximum feed. This movement may be effected while the machine is in motion. The excessive thrust on the bearings, which is one objection to the friction-feed, is

largely overcome in this machine by the use of ball bearings, and the mechanism works quite satisfactorily.

In addition to the socket for taper-shank arbors the spindle in this machine is threaded to receive large facing cutter-heads like that shown in the lower part of the cut. In this respect the spindle of the machine in Fig. 546 is similarly designed.

"Planer-type" Milling-machine. — As indicated by its title, the machine shown in Fig. 553 is constructed on the same general plan as

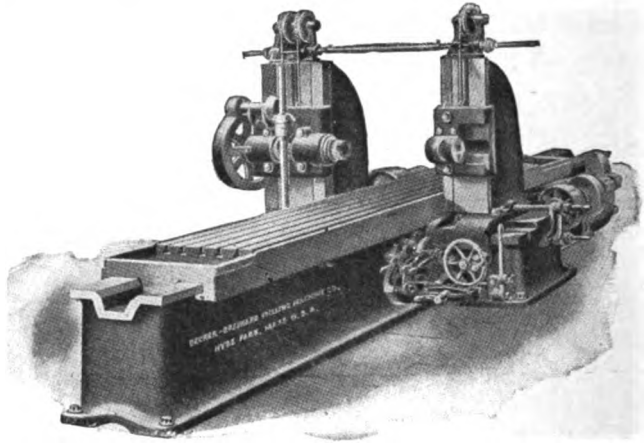

FIG. 553.

a planer. The table affords ample area for clamping large heavy work, and the arbor, which is adjustable vertically on the uprights, is firmly supported at both ends.

In Fig. 554 is illustrated an open-side milling-machine, which serves the same purpose in miller work as the open-side planer serves in planer work. Starting with the cone pulley seen projecting just above the table, it is easy to follow the driving mechanism through the train of gears to the vertical spindle. The feed of the spindle along the cross-rail is effected by two pairs of cone pulleys, the first being shown to the right of the spindle and the second pair near the overhanging end of the cross-rail. At the front end of the machine are seen two cone pulleys which, through the worm-gearing shown on the outside, and other mechanism on the inside of the frame, give the lengthwise feed of the table.

Planer-type milling-machines are sometimes made with as many as four spindles, two of these being horizontal spindles supported on

the uprights or housing castings, and the other two vertical spindles which are journaled in a cross-head sliding on a cross-rail as in Fig. 554.

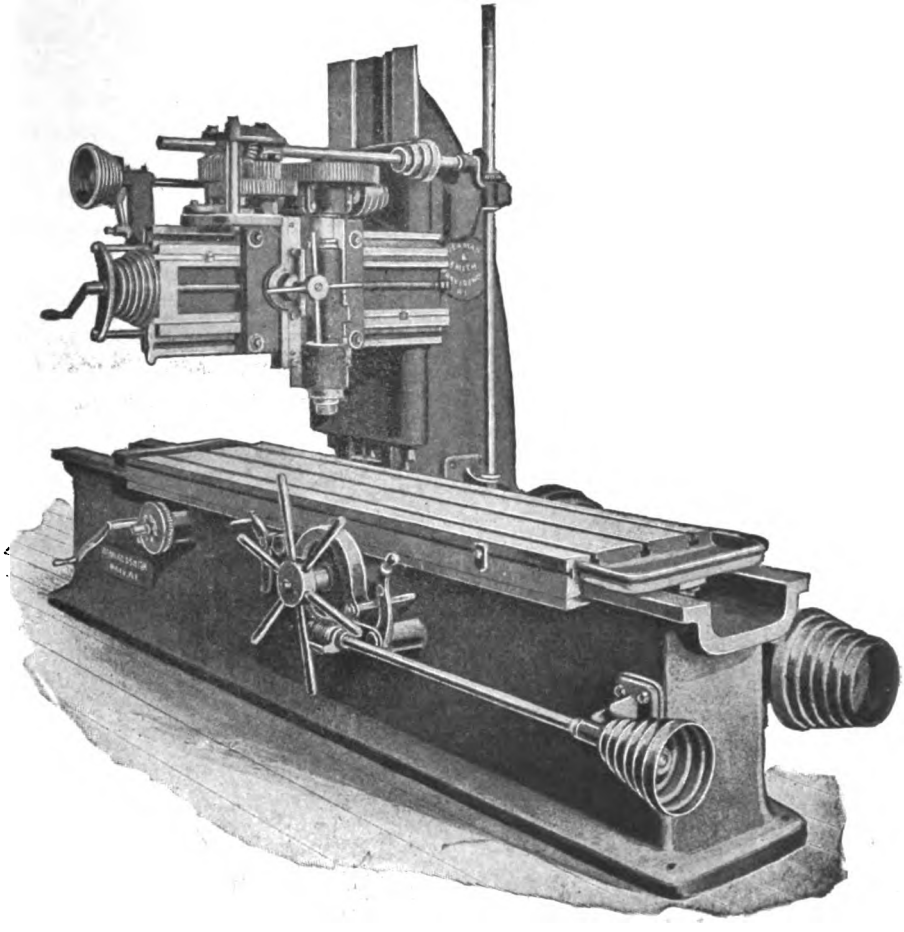

FIG. 554.

Vertical Miller.—The essential difference between the vertical milling-machine and the horizontal miller is, of course, the vertical spindle of the former. The miller shown in Fig. 555 is driven from a counter-shaft having a cone pulley, etc. The cone pulley of the machine, however, is not placed on the main spindle, but on a short shaft at *P*. On this same shaft is another pulley *P* 1, from which the power is con-

veyed by a belt running over the idler-pulleys $P\,2$ to the spindle-pulley at $P\,3$.

The construction of the knee and the table, and the mechanism for operating these parts, do not necessarily differ in the vertical miller

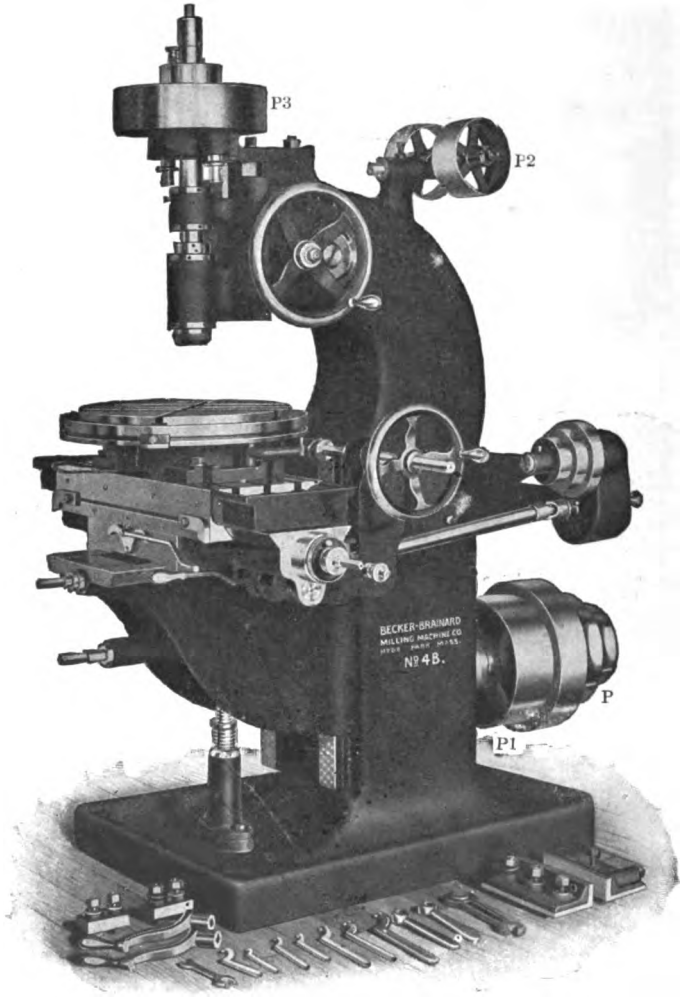

FIG. 555.

from the same parts in the horizontal miller. The rotary table shown in Fig. 555 is not an essential part of this machine. It is detachably connected to the main table, and with suitable feed connections could

be used on milling-machines of different construction. It is, however, a very desirable attachment for the vertical miller. In addition to the vertical adjustment of the knee, the machine shown in the engraving is provided with a slight adjustment for the spindle-head. The means of feeding the head (and with it the spindle) is a large hand-wheel shown on the upper part of the frame.

There are many designs and modifications in milling-machines, including hand-millers, but the foregoing represent some of the leading types.

Milling-machine and Planer Compared.—In the milling-machine the cutter is connected to and revolves with the spindle. This rotary motion makes the cutting practically continuous, while the planer-tool (as planers are commonly constructed) cuts only during the forward stroke of the table. Again, in the planer a single-edge tool is generally used, which tool dulls quickly. A multiple-edge tool being used in the miller, the work of each edge is greatly lessened. The tool, therefore, holds its edge almost indefinitely and produces work more uniform in shape. This is of great importance in connection with the interchangeable system of manufacturing, especially when curved shapes are involved. From the above considerations it will be apparent that the milling-machine should be a more economical tool than the planer. Nevertheless, the improvements in the planer in the direction of making the return-stroke quicker, and the introduction of multiple-edge tools in some cases, together with the use of two or more cross-heads on the larger machines, will still enable this machine to hold its ground in competition with the miller for many kinds of work. For gear-cutting the miller is, of course, much superior to the planer.

MILLING-MACHINE CUTTERS, WORK, AND ATTACHMENTS

In Figs. 556 to 576 inclusive are shown various milling-cutters the names of which are given in connection with the cutters. The methods of using some of these cutters will be indicated in succeeding paragraphs.

Figs. 577 to 584 show a number of operations performed on a machine made by the Cincinnati Milling Machine Company. In connection with these illustrations the student should note not only the work, but also the shapes of the cutters, and the various fixtures and clamping methods used to hold the work to the table.

Slab-milling.—Fig. 577 illustrates an operation called *slab-milling*. The cutter is of the inserted-tooth type, the teeth being arranged in

helical lines. While some distance apart, the teeth are so placed as to cover the whole width of the work in one revolution. The principle

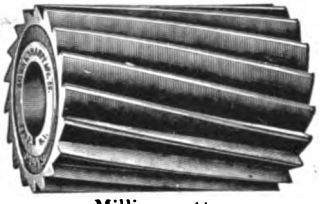

Milling-cutter.
FIG. 556.

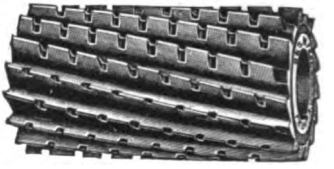

Milling-cutter with Nicked Teeth.
FIG. 557.

Left-hand End-mill.
FIG. 558.

Interlocking Side-milling Cutter.
FIG. 559.

End-mill with Center Cut.
FIG. 560.

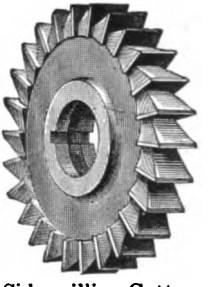

Side-milling Cutter.
FIG. 561.

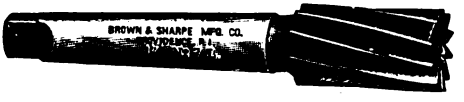

Spiral End-mill.
FIG. 562.

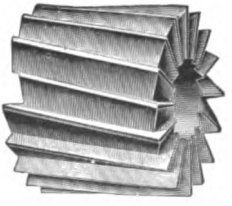

Spiral Shell End-mill.
FIG. 563.

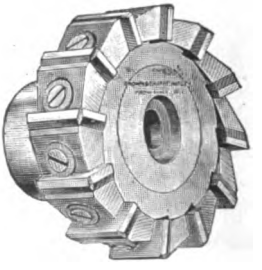

Face-milling Cutter with Inserted Teeth.
FIG. 564.

is the same as that of the notched cutter of Fig. 492. The advantage of this form of cutting-edge has been referred to in connection with

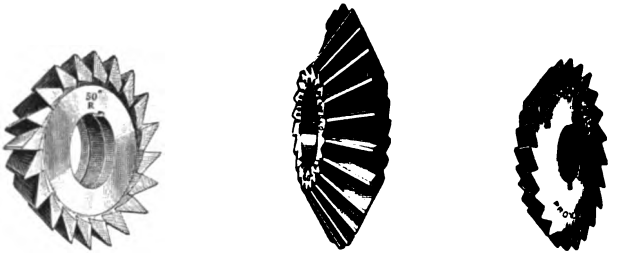

Angular Cutters.
FIG. 565.

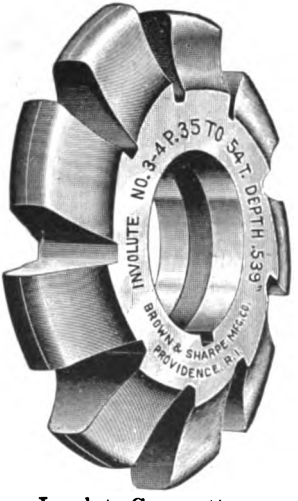

Involute Gear-cutter.
FIG. 566.

Side-milling Cutter with Inserted Teeth
FIG. 567.

Metal-slitting Saw.
FIG. 568.

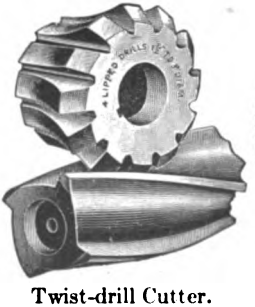

Twist-drill Cutter.
FIG. 569

Screw-slotting Cutter.
FIG. 570.

Fig. 203 and elsewhere in this work. The pieces, which are held in a special chucking fixture, are cast iron with the scale on, and the *mill*

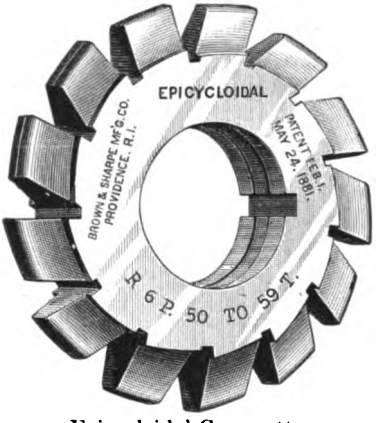

Epicycloidal Gear-cutter.
Fig. 571.

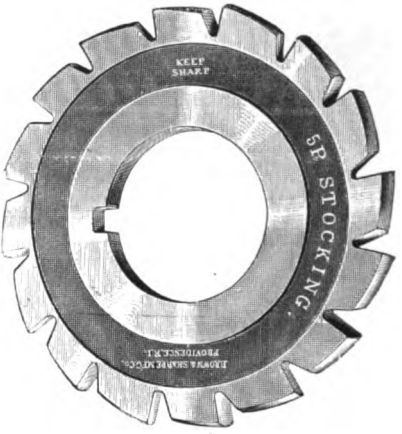

Stocking Cutter.
Fig. 572.

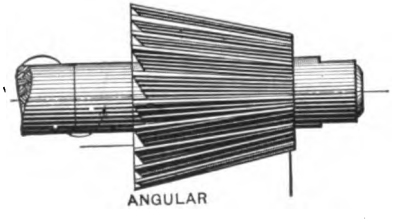

Fig. 573.

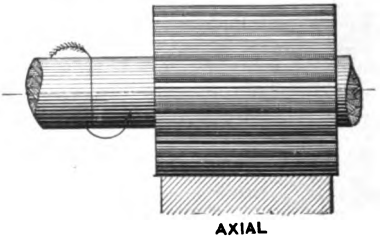

Fig 574

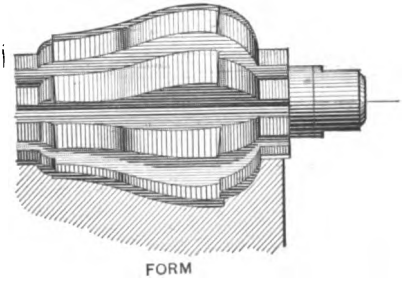

Fig. 575.

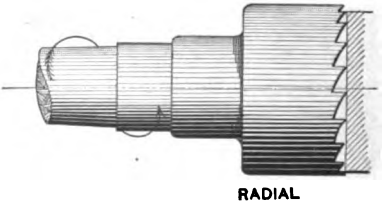

Fig. 576.

is represented as removing this scale at a cutting speed of 40′ per minute, the cut being about $1/8$″ deep by $8\,1/4$″ wide and the feed .252″ per turn of cutter.

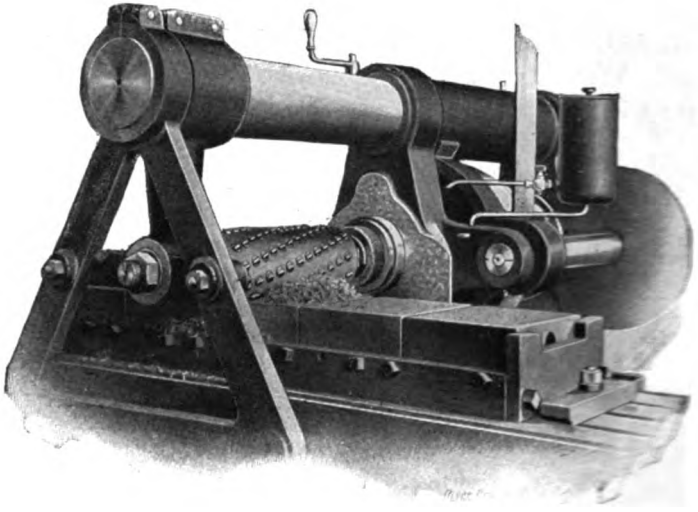

FIG. 577.

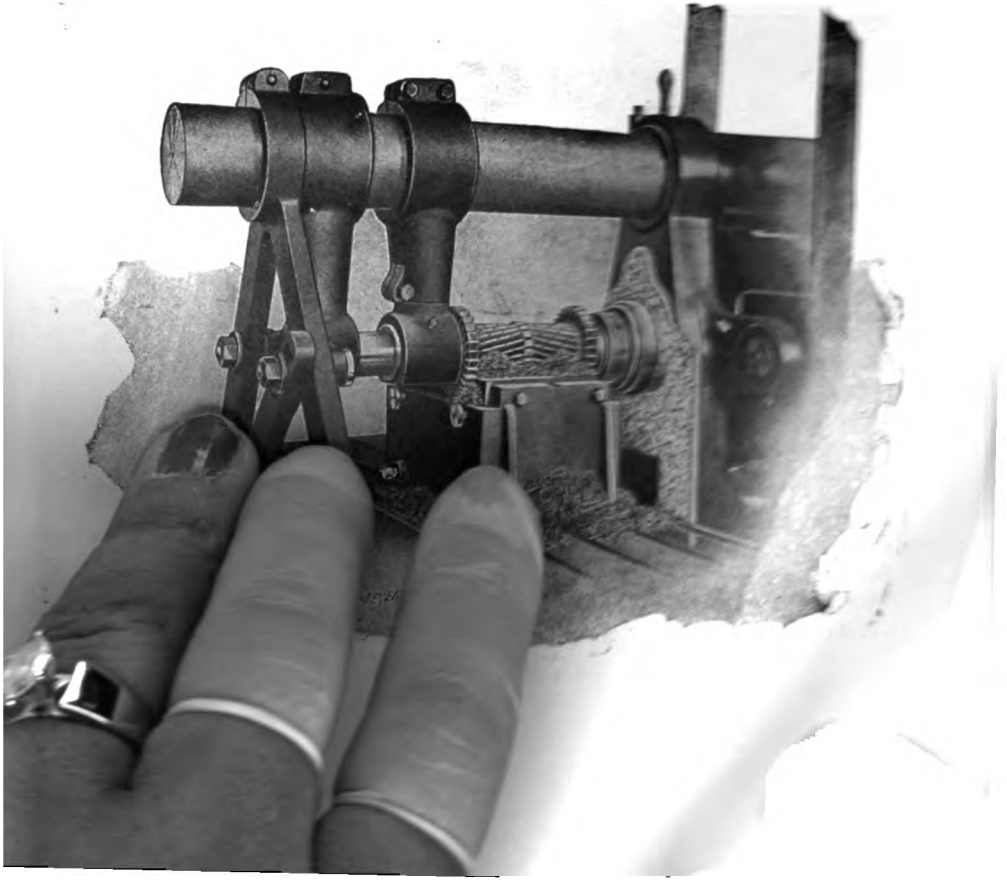

Gang-milling.—The *mill* or milling-cutter shown in connection with Fig. 578 is made up of several cutters, and for this reason it is called a *gang-mill*. The cutters, which are 5″ and 3″ diameter, make 31 revolutions per minute, taking a cut $^1/_8$″ deep by $9^1/_4$″ wide, with a feed

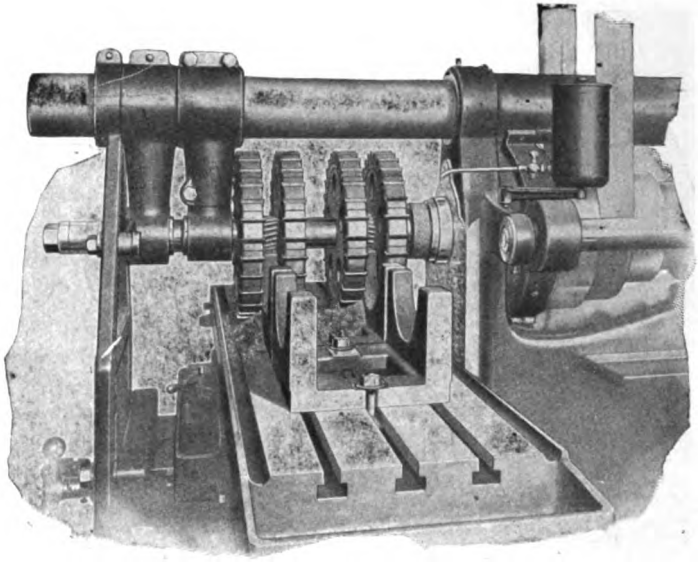

FIG 579.

of .075″ per turn. The 5″ cutters machine the pieces a short distance down the sides

The same pieces are inverted in Fig. 579, and the sides are being cut down and upper edges milled in one operation. The large mills are $13^1/_2$″ diameter and make $12^1/_2$ turns per minute, the feed being .100″ per turn.

The double support for the outer end of the arbor in the last two operations is worthy of notice.

Slot-milling, etc.—The operation in Fig. 580 is that of milling a slot in the oscillating link of the shaper illustrated in Figs. 508 to 510. The cutter is $2^3/_4$″ diameter and takes a cut $^1/_{16}$″ deep by $2^3/_4$″ wide *at top and bottom of the slot*. The same cutter is used for the end slot and for the flat surfaces at top and bottom of the link.

Fig. 581 shows both sides of the link being milled at the same time

with *face-mills*. The method of squaring the link in a special V block fixture is instructive.

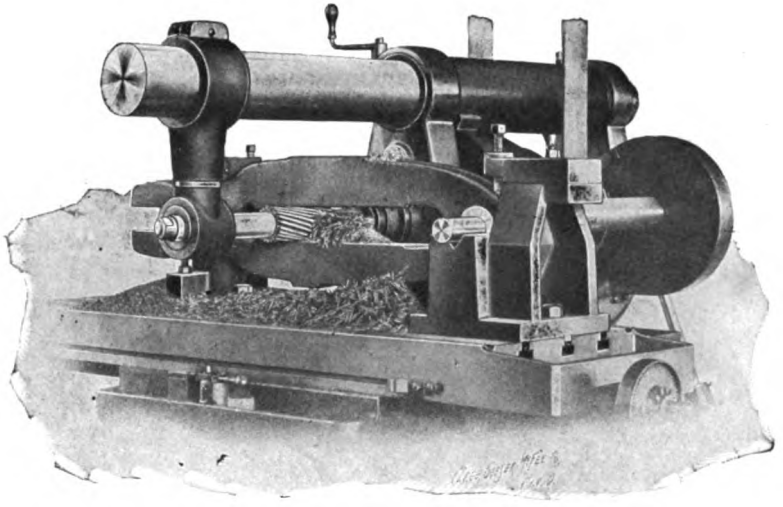

FIG. 580.

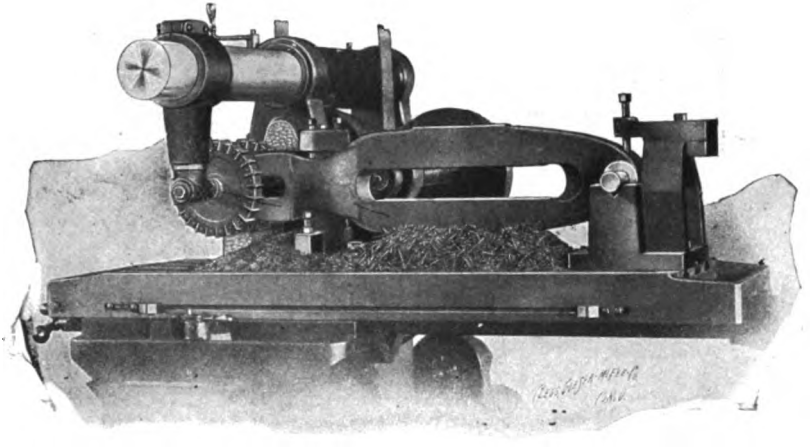

FIG. 581.

Milling a Gas-engine Frame.—In milling the casting shown in Fig. 582 the table is fed .102″ per turn of cutter during the time that the large cutter is entering the work. When all the cutters are in full contact the feed is dropped to .080″. This method results in a saving of about

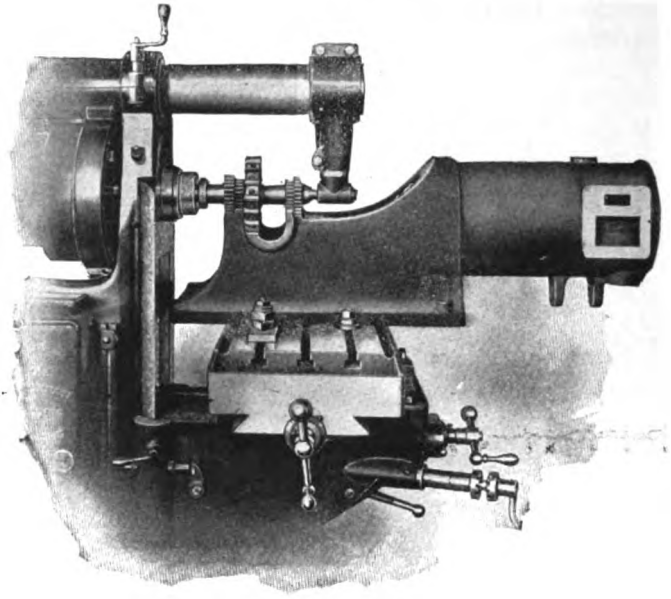

FIG. 582.

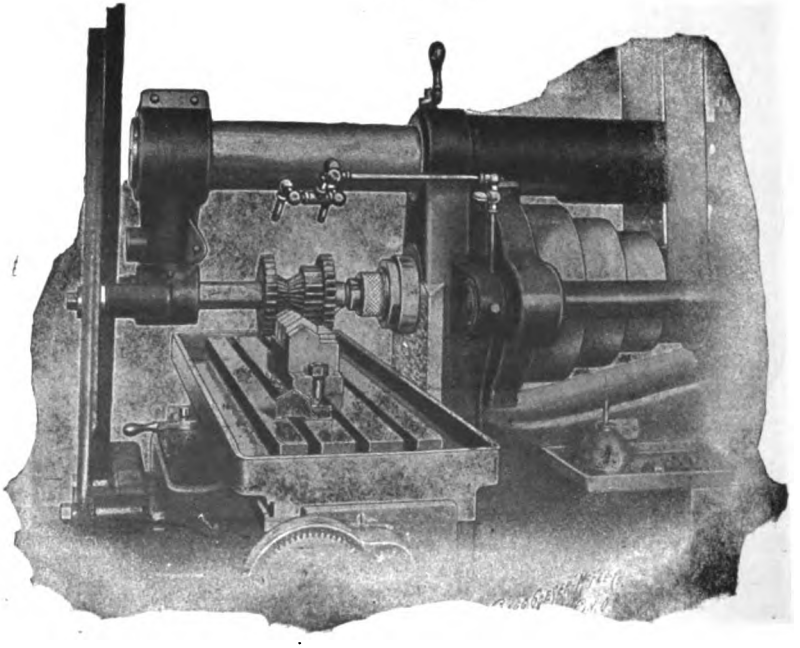

FIG. 583.

15 per cent. The wide range of feeds and modern quick feed-changing mechanism makes this and greater results possible. With the old cone-pulley feeds and narrow range, in some work there was no feed even approximately right. The number of spindle speeds was also inadequate. The consequence was a serious loss.

Milling Steel Castings.—In the foregoing examples the metal operated upon has been cast iron. Fig. 583 shows a gang-mill machining a number of steel castings, the latter being held in a special fixture. The largest cutters are $5^1/_2''$ in diameter and the smallest 2″. The mill makes 56 revolutions per minute, giving the smallest cutters a cutting speed of 30′ per minute. The depth of cut is about $^3/_{32}''$, the total width of milled surface being 5″ and the feed .050″ per turn.

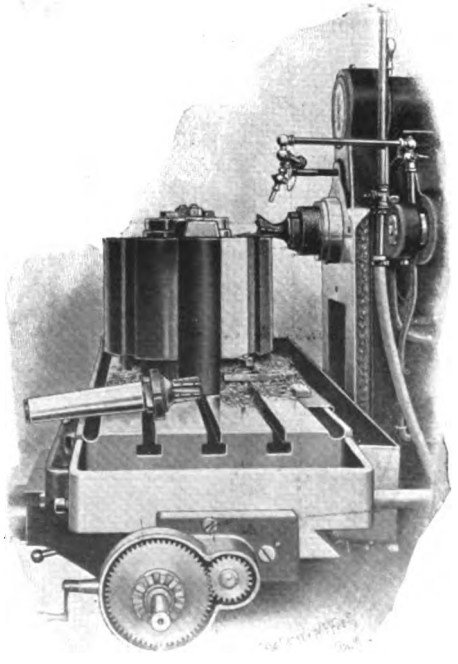

FIG 584.

Milling a Dovetail Slot (Fig. 584). — The work in this case is a 270-pound steel casting in which it is required to *cut from the solid* dovetail slots $1^1/_8''$ deep by about $1^5/_8''$ wide at the outer edge. The end mill seen on the table is first used. With this tool a rectangular slot

$1\frac{1}{8}''$ deep by $1\frac{5}{8}''$ wide is cut at a surface speed of 36′, the feed being .012″ per turn. The cutter shown in the spindle finishes the slot. In these operations the work is fed vertically, and in addition to the cut the feed mechanism lifts the work and the heavy machine parts.

The student should note that in this and the preceding example a lower cutting speed is used. This is due to the tougher nature of the material.

In milling steel, wrought iron, etc., oil or some cheaper lubricant is generally used and the piping seen just above the cutter is for this purpose.

Milling Keyways. Methods of Holding the Shafts.—When a keyway is to be milled the full length of a shaft, the clamps or straps which hold the shaft must be so arranged as not to interfere with the cutters.

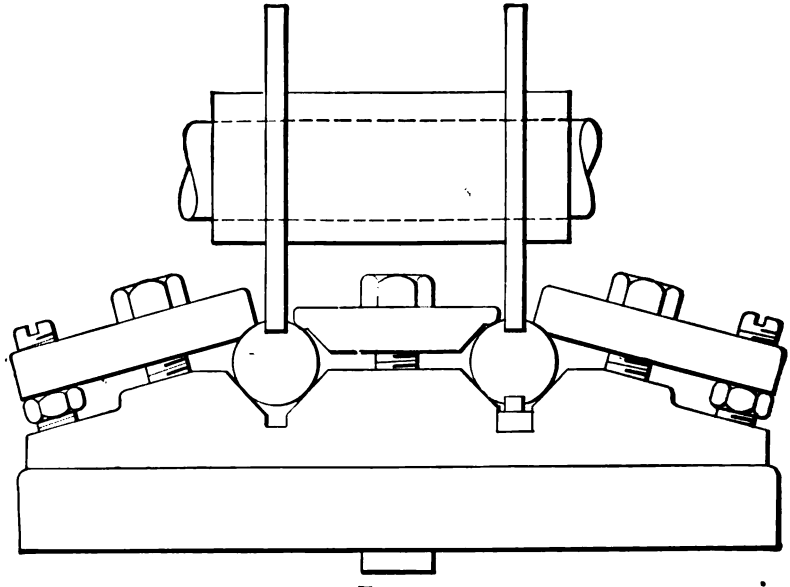

FIG. 585.

Fig. 585 shows a fixture in which two shafts are simultaneously milled, the clamps being properly arranged.

The side-straps are blocked up with *adjustable studs* screwed into the clamps and held by a check-nut. This very convenient expedient can be used in strapping work in any machine.

When two opposite keyways are required in the same shaft the

latter may be quickly adjusted for the second keyway by using a guide like that shown under the right-hand shaft.

If short keyways near the middle of the shafts are wanted, the shafts may be held by two straps with a central bolt in each strap, the latter being placed so as to clear the cutters. No blocking is needed in this case.

In many cases shafts may be held in the table slots by straps without any special fixtures.

Emergency Milling.—It is occasionally necessary to mill work for which no regular cutter is available. In such a case a *fly-cutter* made on the principle of that shown in Fig. 586 may be used. The cutter

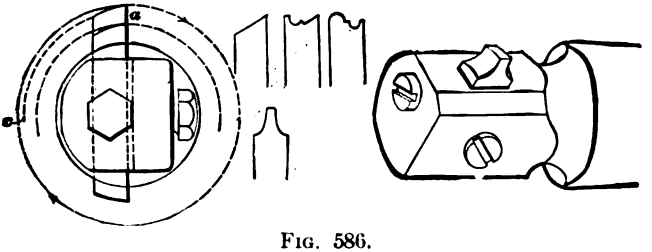

FIG. 586.

may be made of rectangular or round steel and held in a miller arbor by set-screws as shown or by a key. The shapes of cutters seen between the perspective and end views are suggestive of what may be done in this way. These cutters are not economical, but they may be very quickly made, and their use is justified in an emergency.

Boring in the Miller.—Fig. 587 shows how a simple cutter and boring-bar may be used in the miller. The boring-cutter is shown at *a*. In a collar at *c* are two cutters for facing the work. It is obvious that drilling and reaming may also be done in the miller.

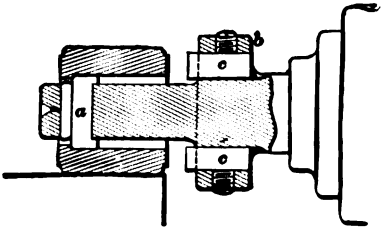

FIG. 587.

Holding Work Without Special Fixtures.—In most of the examples given above the work is held in special fixtures. The use of bolts and straps for clamping work on the miller table being substantially the same as in the drilling-machine, boring-machine, and planer, it seems scarcely necessary to give the methods in this connection. However, Fig. 588 shows three castings held by bolts and straps, the shape of the

pieces being such as to facilitate this method. It will be noticed that the outside edges of the castings are in contact with strips of metal

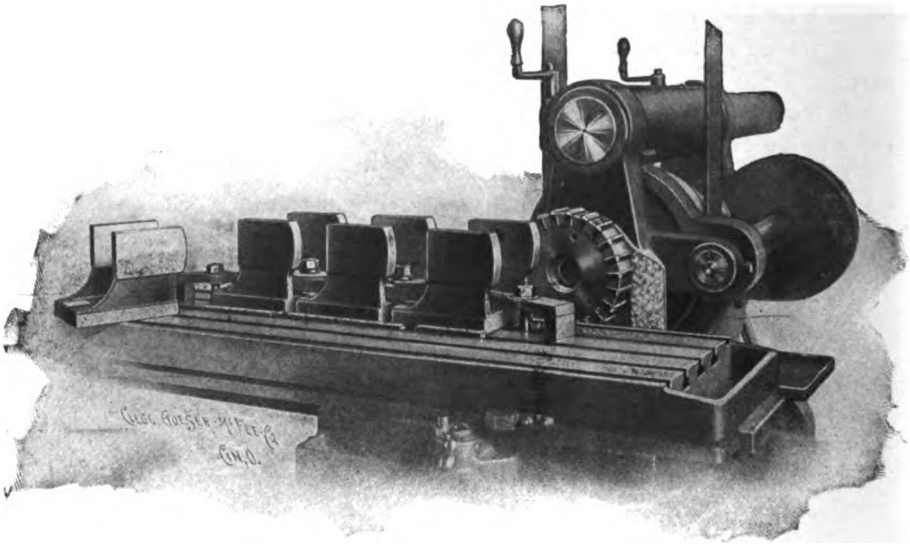

FIG. 588.

fitting one of the table slots. This simple method of "lining up" work is also used in the planer.

In the above work the 8″ face-mill is taking a cut about $^1/_8$″ deep by 6″ wide on cast iron, the cutting speed being 40′ per minute and the feed .138″ per turn. The pressure of the cut tends to hold the work against the strips, but when there is heavy pressure lengthwise on the table, end-stops may be necessary. The miller lacks the holes for stop-pins provided in the planer-table, but in most cases simple straps firmly bolted to the table will answer. *Pasteboard* under the straps will protect the table and at the same time cause the straps to hold more securely. However, when the point of contact between the strap and work needs to be high, the strap may be held on wooden blocks, the latter being placed with the grain perpendicular to the table.

Vertical Miller Operations.—The methods of holding work by bolts and straps is further illustrated in Figs. 589, 590, and 591. These illustrations show also various operations in the Becker-Brainard Vertical Miller.

Fig. 592 shows a good example of dovetail milling, the work being held on an arbor supported in V blocks. The blocks hold the arbor

parallel with the table and the milled surfaces are therefore true with the bore.

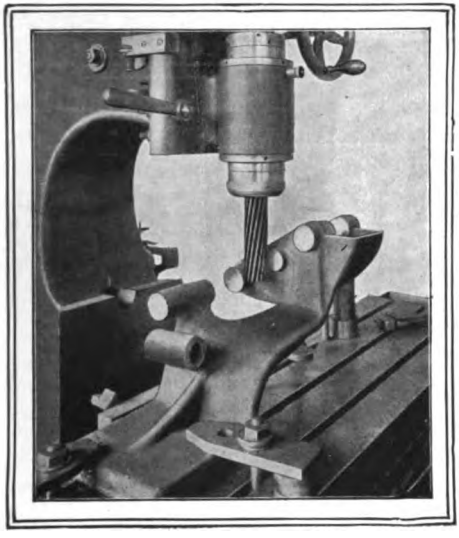

FIG. 589.

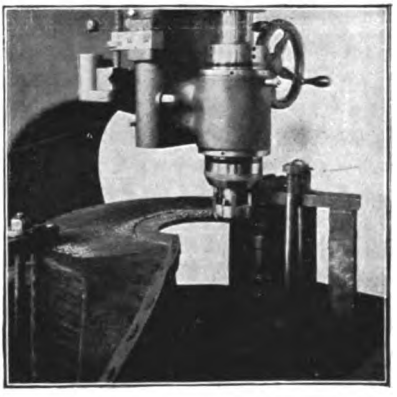

FIG. 590.

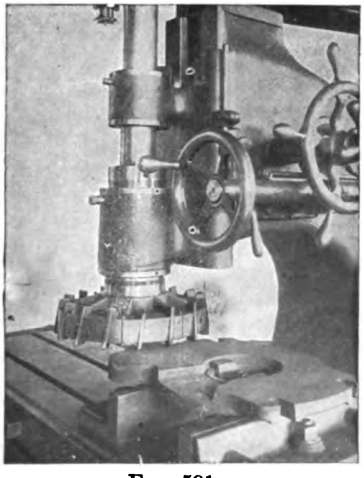

FIG. 591.

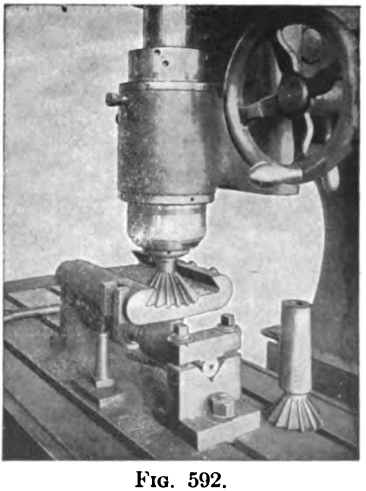

FIG. 592.

Fig. 593 is suggestive of the possibilities of the *rotary attachment*. Hand-wheels having a semicircular rim, worm-wheels, and much other lathe work may be machined in this manner.

Holding Work in the Vise. Milling Parallel Pieces of Different Widths with Same Pair of Cutters.—Much of the small work machined

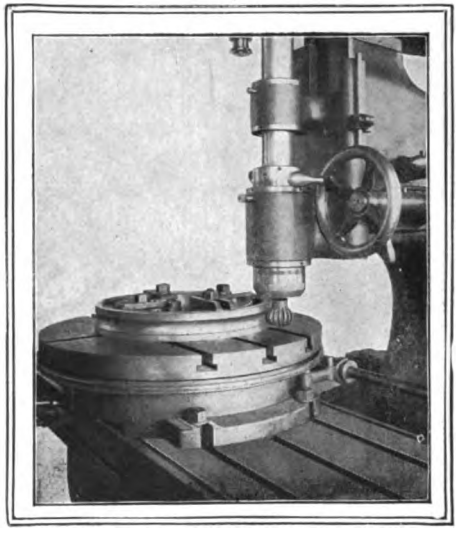

Fig. 593.

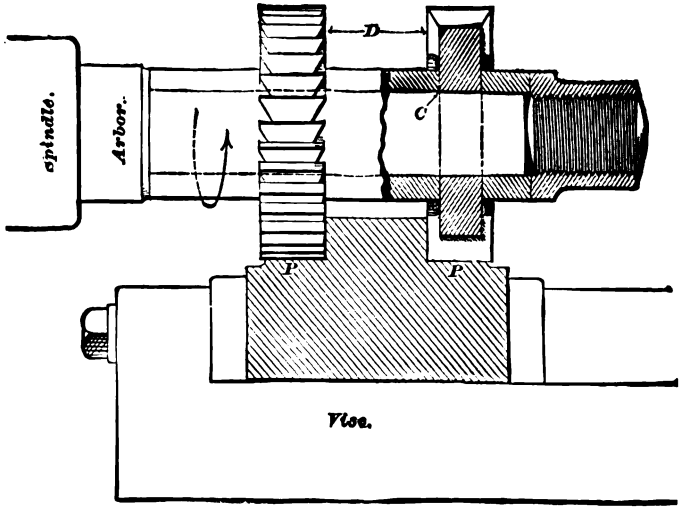

Fig. 594.

in the miller may be held in the vise. Fig. 594 shows a piece thus held. In this illustration we wish to call special attention to the method of

adjusting the cutters. The position of the latter on the arbor is determined by the number and lengths of the detachable collars. These are made (preferably of tool steel hardened and ground) in different lengths, and in different diameters to suit the arbors. Collars and cutters are held by the nut on the end of the arbor, the latter having a taper shank to fit the miller-spindle. When parallel pieces of different widths are to be milled the *same pair of cutters* may be used by merely *changing* the *length of the collar* between the cutters. The illustration will make this clear. Thin washers are useful in adjusting the cutters.

The Universal vise shown in Fig. 595 can be so adjusted as to hold work at any angle. The angles are indicated by the graduations.

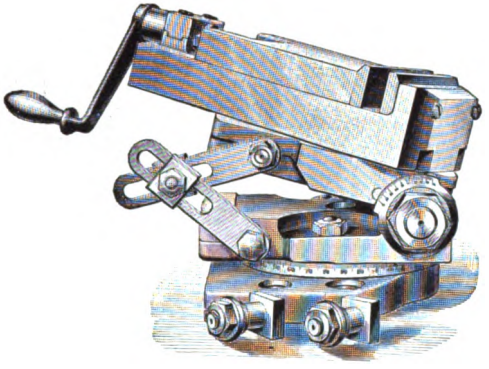

FIG. 595.

Miller vises are generally made with a tongue fitting the table-slots. They are held to the table by short bolts.

Wide-angle Spiral Attachment.—As a rule an attachment for given work is not so economical in its operation as a machine specially adapted to that work. Nevertheless, a considerable variety of attachments are used in connection with the horizontal miller, and some of them are quite satisfactory. A good idea of the general construction of most of these devices may be obtained by a study of the wide-angle spiral attachment, a sectional view of which is shown in Fig. 596. In this illustration *A* is the box frame, *B* an arbor fitting the miller-spindle, *C* a miter-gear keyed to the arbor and journaled in *A*, *D* another miter-gear meshing with *C* and operating *E*, and *F* the cutter-spindle driven by worm or spiral gears as shown.

The perspective view, Fig. 597, is probably that of a smaller size, but it is a good representation of the outside appearance of this attach-

ment. The method of securing the attachment to the miller and swiveling the cutter-spindle to any angle in a horizontal plane is clearly indicated in this view. The figure illustrates the operation of cutting a spiral gear.

The Vertical Milling Attachment shown in Fig. 598 is simpler than the spiral attachment. Its spindle and head may be swiveled in a ver-

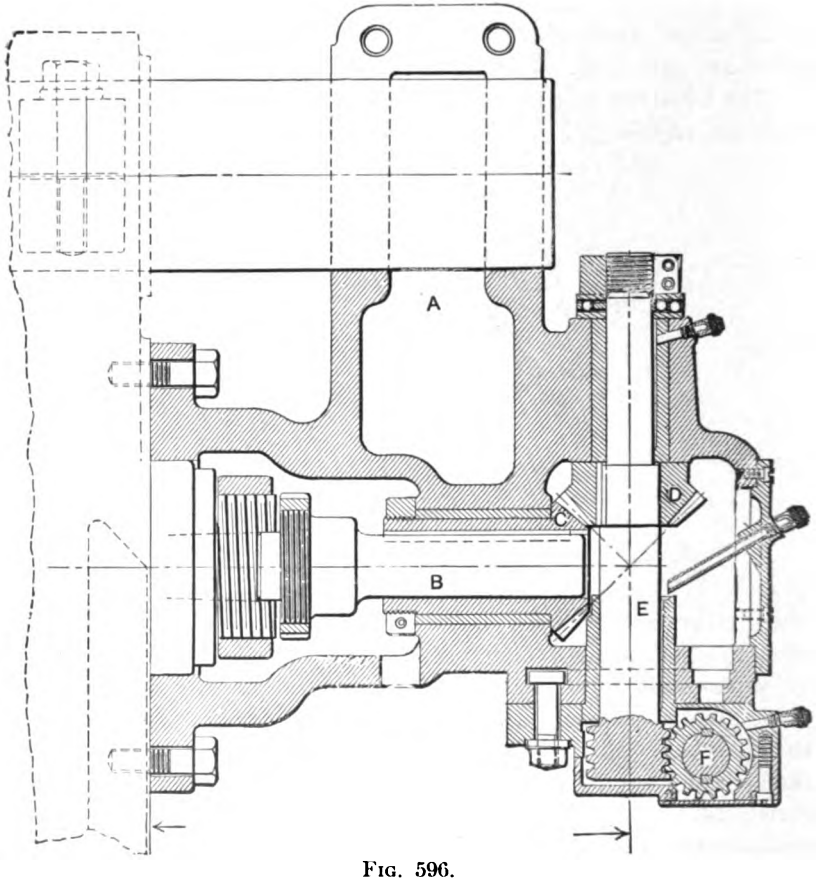

FIG. 596.

tical plane through a complete circle The engraving represents a $4^1/_2''$ cutter taking a light cut on cast-iron pieces which have been previously roughed out. The surface speed of the cutter at its largest diameter is 60′ per minute, the feed .252″ per turn, and the width of the cut $4^3/_{16}''$.

Rack Attachment.—Fig. 599 shows a rack-milling attachment. The

spindle is horizontal, but it is placed below the main spindle and at right angles to the latter. This arrangement admits of cutting racks several times longer than would be possible with the main machine. The cut represents a special fixture holding a long rack which is being milled.

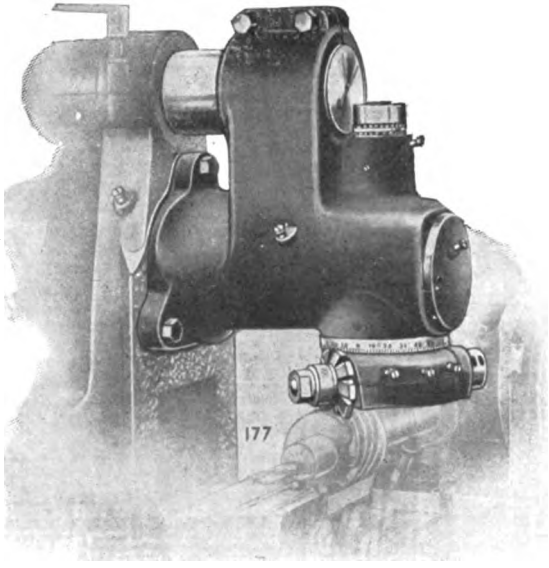

FIG. 597.

Slotting Attachment.—For tool-making and die-sinking the attachment shown in Fig. 600 is a valuable addition to a miller outfit. The interior mechanism of this attachment is quite different from that of Fig. 596, and the lesson that it furnishes in machine design may justify the addition of Figs. 601 and 602. The names given in connection with the various parts render a lengthy description unnecessary. The attachment frame is secured to the miller and overhanging arm on the same principle that the arm itself is held. The "crank-disk," which operates the slotting-tool, is a cylindrical shell keyed to the miller-arbor and journaled in the attachment frame. On the outer face of the disk is a T slot in which the crank-pin is adjusted for different lengths of throw. The tool-holder may be swiveled through a complete circle in a horizontal plane, and the whole attachment may be swiveled through 20° in a vertical plane.

Among other *milling* attachments are the attachment for cutting internal gears, the cam-cutting attachment, the rotary attachment, and the high-speed attachment. The latter is a device by which very small cutters are caused to run faster than the main spindle of the miller.

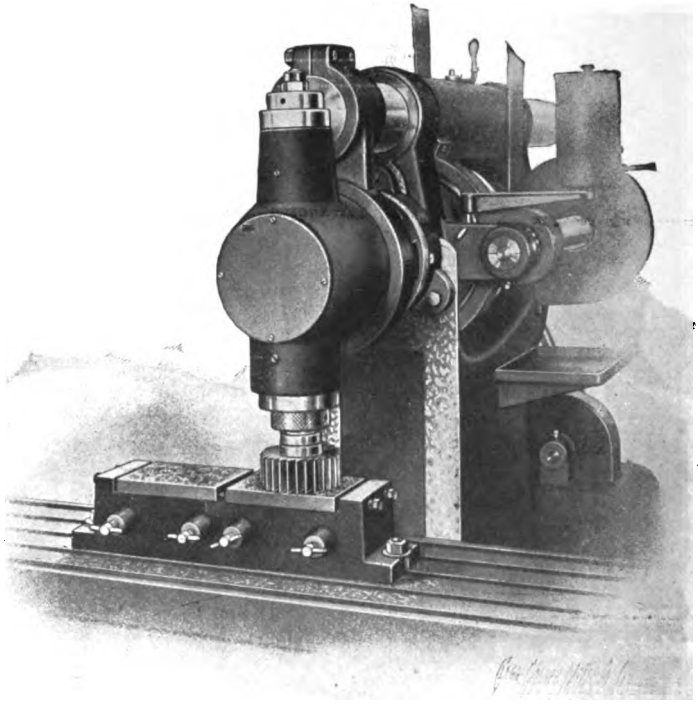

FIG. 598.

The rotary attachment is shown in Fig. 555 bolted to the table of the vertical miller. It is shown again in Fig. 593.

Dividing Head.—If we wish to distinguish between *milling* attachments and *miller* attachments the *dividing head* should be classed among the latter. This is the device used in the miller for *indexing*, i.e., making accurate divisions of polygonal figures and dividing circles. It is a necessary adjunct of the *Universal* miller. Before considering the work done in connection with the dividing head it is important to have a clear understanding of the construction of this attachment. In Fig. 603 is shown an end view of the dividing head partly sectioned and Fig. 604 shows a vertical section through the center of the spindle-bearing. These are

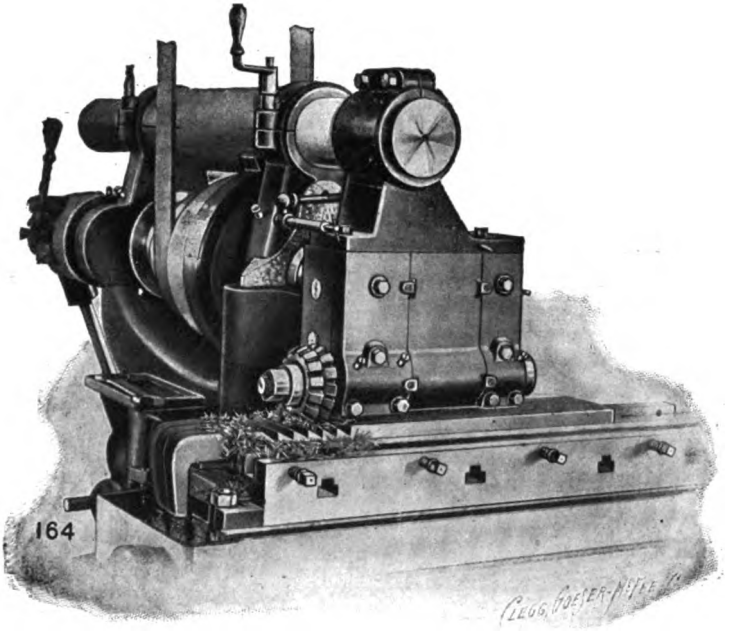

FIG. 599.

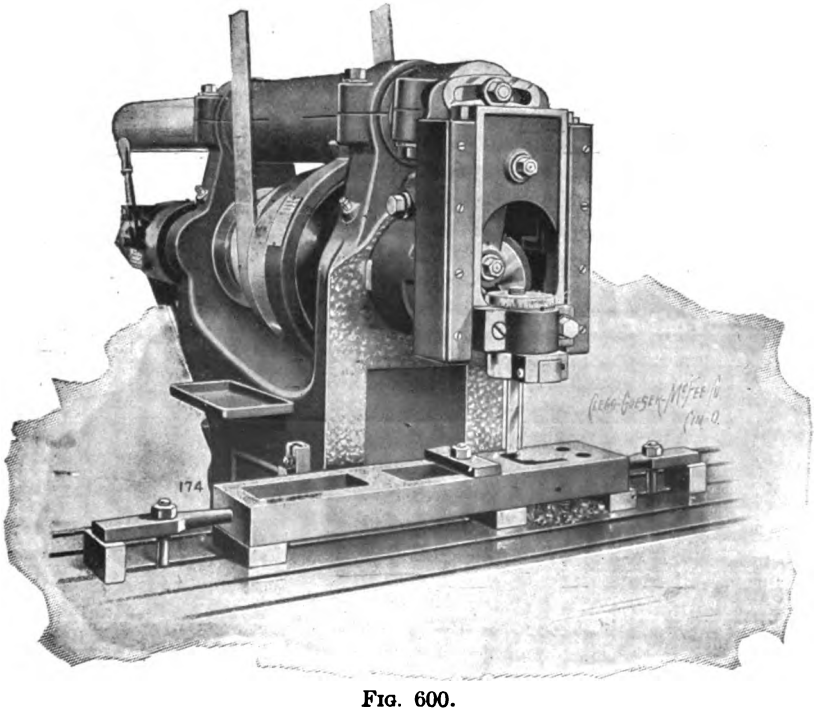

FIG. 600.

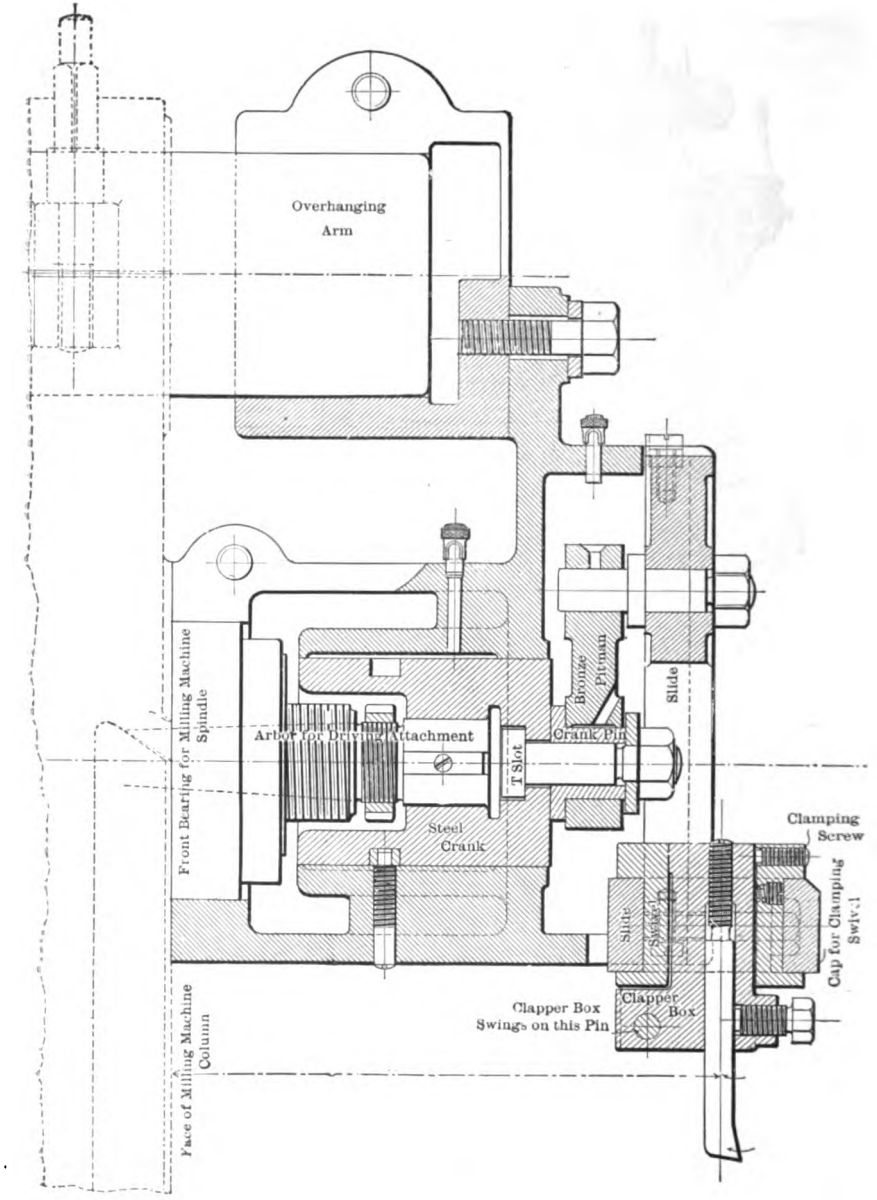
Overhanging
Arm
Front Bearing for Milling Machine Spindle
Arbor for Driving Attachment
T Slot
Steel
Crank
Bronze
Pitman
Crank Pin
Slide
Clamping
Screw
Cap for Clamping
Swivel
Slide
Swivel
Clapper
Box
Clapper Box
Swings on this Pin
Face of Milling Machine
Column

FIG. 601.

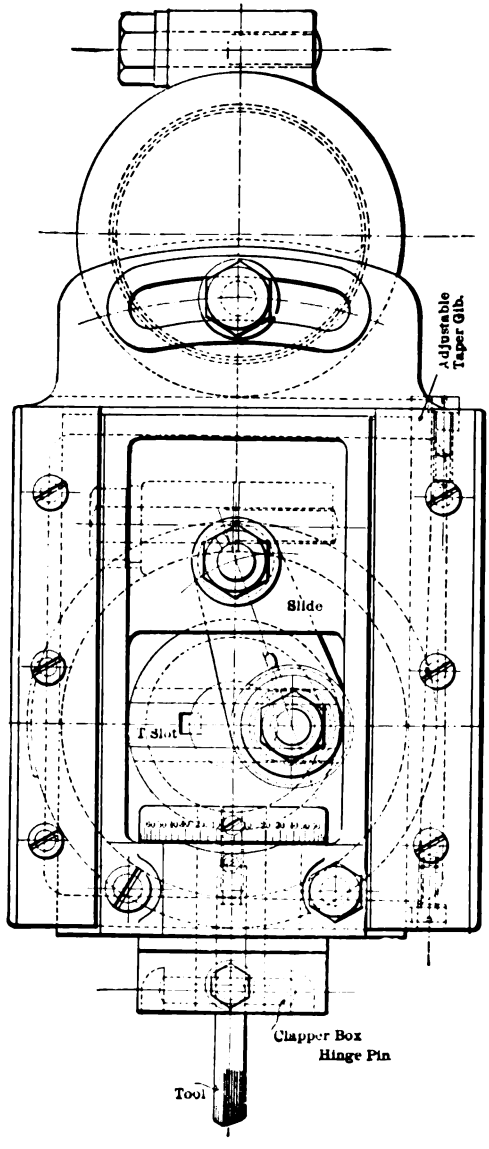
Adjustable Taper Gib.
Slide
T Slot
Clapper Box Hinge Pin
Tool

FIG. 602.

cuts of an old design. They are used because in them the principle is clearly illustrated. A later design of the Brown & Sharpe dividing

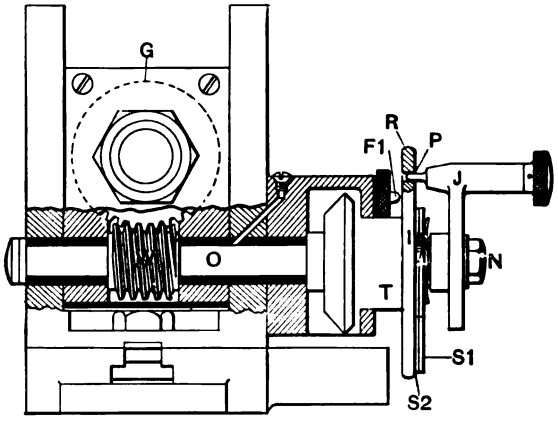

FIG. 603.

head in connection with the foot-stock is shown in Figs. 605, 606, 607, and 608. Referring to Figs. 603 and 604, the worm-wheel *G*, which is

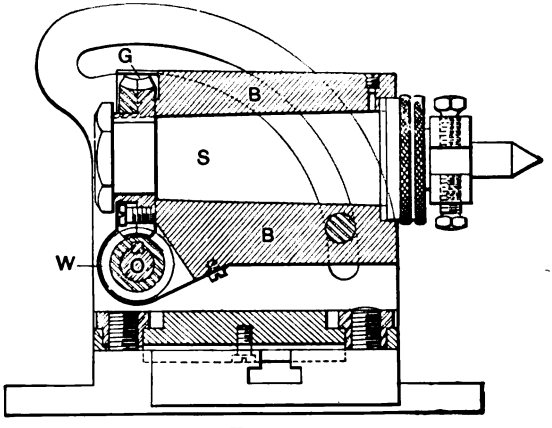

FIG. 604.

tightly keyed to the spindle *S*, has 40 teeth. Meshing with *G* is the worm *W*, tightly secured to *O*. Detachably secured to *T* (which turns freely on *O*) is an index-plate *R*, Fig. 603. Each machine has several of these plates, and each plate has several different circles of holes by which various divisions of circles may be measured. The crank *J* is

slotted so that it may be moved radially on O to bring the pin P in line with any circle of holes on R. When adjusted as required, J is held

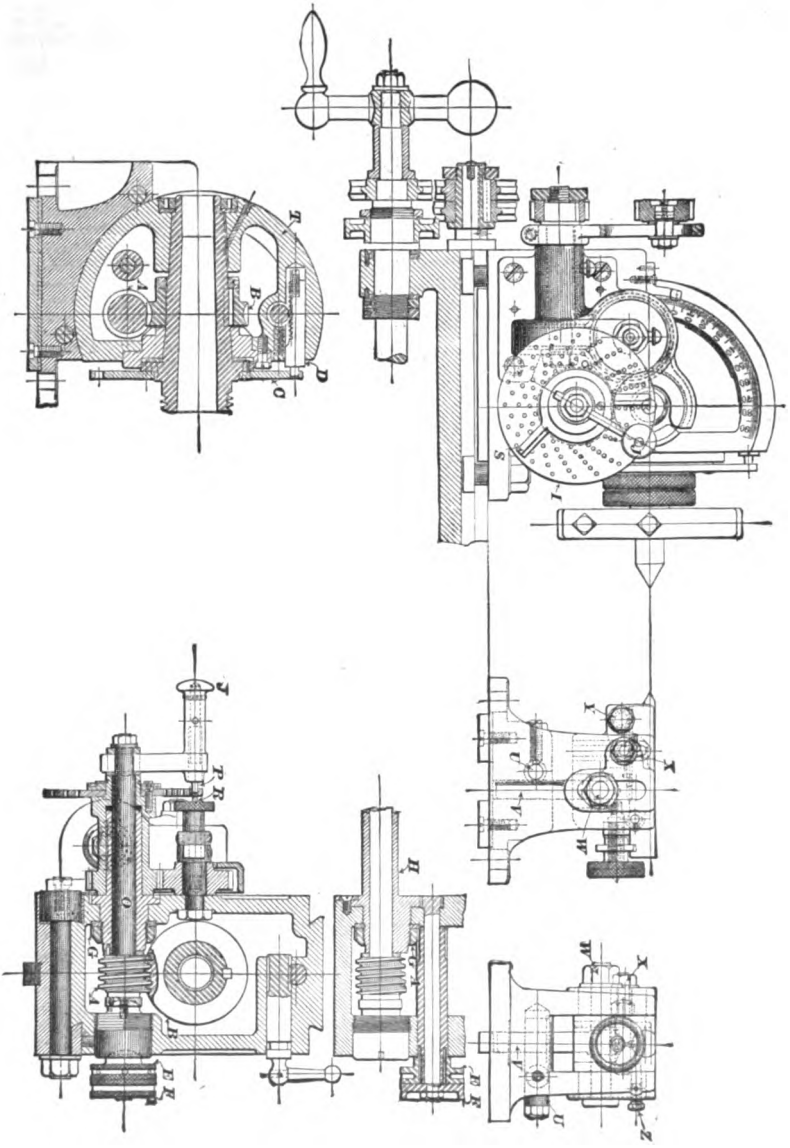

Fig. 607.

Fig. 605.

Fig. 606.

Fig. 608.

tightly on O by the nut N. The gear or other work may be rotated with the spindle S by revolving J independently of R. In this case the pin

P is withdrawn and inserted again for each tooth, and pin F 1 holds R stationary. This method is used in *simple indexing*. The work may also be revolved by turning J and R together. At this time P is in one of the holes in R and pin F 1 is withdrawn. The two methods combined are used in *compound indexing*.

In many kinds of work it is necessary to swivel the spindle S. It may be swung around on the axis of the worm-shaft and clamped by a bolt passing through the circular slot.

Dividing-heads have been much improved since that of Fig. 603 was designed. The head illustrated in Fig. 605 has in addition to the index-plate I a second index-plate. As shown at C in the sectional view, Fig. 607, this plate is secured by screws to the spindle. The object of this plate is to provide for quick indexing in certain kinds of work—grooving taps and reamers, for instance. In this *direct* indexing the worm is disconnected from the worm-wheel and the plate is turned by hand. Both plate and spindle may be locked by the pin D.

Simple Indexing.—Referring again to Figs. 603 and 604, the gear (or other work) being placed in position, one revolution of J causes G and the gear to turn $^1/_{40}$ of a revolution. Now if 40 be the required number of teeth in the gear, one turn of J will give the correct division for each tooth. If 80 teeth are wanted, one half revolution of J is correct. It is a simple matter, therefore, to deduce the following rule: *40 ÷ number of teeth in gear = revolutions of J for each tooth.* Let it be required to cut 19 teeth. By the above rule $^{40}/_{19}$ equals $2^2/_{19}$, equal revolutions of J. In this case we select an index-plate with a 19-hole circle or some multiple of 19. Using the 19-hole circle we turn the crank two complete revolutions and then move it two spaces more.

To obviate mistakes in registering the fraction, a *sector is used* in connection with the index-plate. An end view of this sector is lettered S 1-S 2 in Fig. 603, but it is more clearly shown in a front view in connection with an index-plate in Figs. 610 and 619. In adjusting this sector to register $^2/_{19}$ the two limbs S 1-S 2 are swung around on the shaft until just 2 spaces (equaling 3 holes) are enclosed between the limbs; a small screw is then tightened, holding the limbs fast. Now for each of the 19 teeth in the gear the crank J must be turned two revolutions plus the fraction enclosed by the sector.

The sector should always be *pulled* around by the *advancing limb;* otherwise its adjustment may be disturbed.

Compound Indexing.—It sometimes happens that we wish to cut a gear with *some number of teeth that cannot be divided by simple indexing*

with any plate on hand. We then have recourse to what is termed *compound indexing.* Let it be required to cut 96 teeth by this method. According to the rule the gear must be turned $^{40}/_{96}$ of a revolution for each tooth. One of the plates furnished with the machine has 20 holes in the outside circle and 18 in the next. The position of the pin F 1, Fig. 603, is the same distance from the axis of O as the 18-hole circle, and generally in one of these holes. If, now, we move the crank 5 spaces of the 20-hole circle, withdraw pin F 1, and turn J with R 3 spaces of the 18 circle, we shall move the gear to be cut $^{5}/_{20}+^{3}/_{18}$ $=^{40}/_{96}$ of a revolution.

It will be noticed that both of these movements were in the same direction; in some cases, however, we cannot get the right division in this way, but have to move the crank forward too much, and then make the correction by moving the index-plate with the crank backward. It so happens that the 96-tooth gear could be divided by both the "*plus and the minus methods*," so to speak. We shall use the 18 and 20 circles as in the previous case. Starting with the 18-hole circle it will be necessary to take such a fraction of that circle that when $^{40}/_{96}$ is subtracted from it the remainder will be equivalent to some fraction of the 20-hole circle. The process in this case, as well as in the former case, is *a tentative one.* If we take 9 holes of the 18 circle it will equal $^{48}/_{96}$ revolutions of the index-plate. Now, subtracting $^{40}/_{96}$ from $^{48}/_{96}$ we have $^{8}/_{96}$ left; but we find this is not equivalent to any fraction having 20 for a denominator. Therefore, 9 spaces of the 18 circle cannot be used. Let us now try 12 spaces of the 18 circle. $^{12}/_{18}$ equals $^{64}/_{96}$ of a revolution of the index-plate; subtracting $^{40}/_{96}$ we have as a remainder $^{24}/_{96}$. $^{24}/_{96}$ equals $^{5}/_{20}$, equals 5 spaces in the number 20 circle. So we find that by moving the index-plate and crank together 12 spaces forward in number 18 circle and the crank 5 spaces backward in the 20-hole circle we turn the gear $^{40}/_{96}$ of a revolution, which was found by the rule to be the correct division for the 96-tooth gear. Thus $^{12}/_{18}-^{5}/_{20}=^{40}/_{96}$.

It should be borne in mind that the number of holes to be enclosed with the sector must be *one more than the required number of spaces.*

Some dividing heads are so constructed that the back-pin F 1 may be adjusted radially. With such an arrangement a wider range of divisions may be made.

Differential Indexing.—The latest indexing-heads made by the B. & S. Manufacturing Company admit of a new differential method of indexing in addition to direct or plain indexing. By this differential

method any division from 1 to 382 may be quickly and accurately made. When this method is used the index-plate and main spindle of the head are connected by a train of gears. The effect of this arrangement is to cause the plate to turn at the same time the crank is being rotated. If one idler or intermediate, as at D in Fig. 609, be used, the index-plate

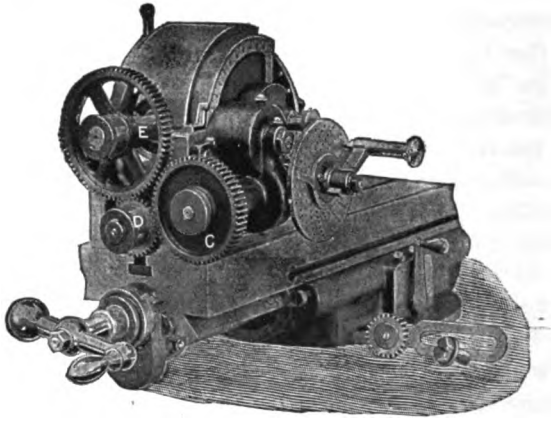

FIG. 609.

will turn in the direction of the crank. The use of two idlers causes the plate to turn in the opposite direction to that of the crank. Because of this rotation of the index-plate we cannot use 40 in the computations as the constant numerator, but must use some other numerator or "spacing number." What this new numerator shall be for any given combination of gearing will depend upon whether one or two idlers are used and the proportions of the gears. The index-crank makes 40 turns to 1 of the spindle, and with equal numbers of teeth in gears E and C the index-plate will make 1 turn to 1 of the spindle. Hence the following rules:

$$40-\frac{\text{teeth in } E}{\text{teeth in } C}=\text{numerator when one idler is used;} \quad . \quad . \quad (1)$$

$$40+\frac{\text{teeth in } E}{\text{teeth in } C}= \quad \text{"} \quad \text{"} \quad \text{two idlers are used.} \quad . \quad (2)$$

The manufacturers furnish with the dividing-head a table giving the changes for both plain and differential indexing, including all divisions from 1 to 382. The gears and index-plates furnished with the machine cover this range, but extras can be supplied. For 131 divisions

the table calls for gears with 28 and 40 teeth for E and C respectively, and one idler, the movement of index-crank being 6 spaces in the 20-hole circle. Let us test these proportions. By rule (1) $40-\frac{28}{40}=39^{3}/_{10}=$ new numerator. Having this new numerator, we proceed exactly as with the older design of dividing-head. Thus $\frac{39.3}{131}=\frac{6}{20}=6$ spaces in the 20-hole circle as required. The equality of these two fractions may be quickly proved by reducing both to decimals.

In some cases it is necessary to use compound gearing. Fig. 610 shows the gears compounded and one idler added. As the gears on the compound stud affect the direction of rotation of the index-plate, a combination like that of Fig. 610 must be computed for two idlers.

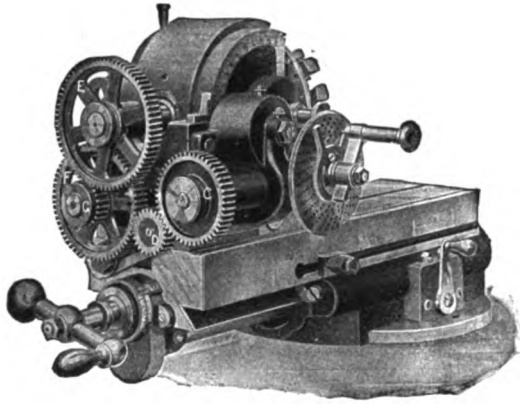

FIG. 610

The other effect of compounding must, of course, be also considered. Using the letters on the gears as symbols of the numbers of teeth, the equations for the two cases are as follows:

$$40-\left(\frac{E}{G}\times\frac{F}{C}\right)=\text{numerator when one idler is used;} \quad . \quad . \quad (3)$$

$$40+\left(\frac{E}{G}\times\frac{F}{C}\right)= \quad \text{“} \quad \text{“ two idlers are used.} \quad . \quad (4)$$

For 374 divisions the table calls for the arrangement shown in the illustration. The gears required are the following: Gear on spindle (E), 56 teeth; first gear on stud (F), 64 teeth; second gear on stud (G),

32 teeth; gear on worm (C), 72 teeth; idler-gear (D), 24 teeth. The movement of the index-crank is given as $\frac{2}{18}$ = two spaces in the 18-hole circle. The idler D does not affect the ratio. Formula (4) applies to this case. Thus $40+\left(\frac{56}{32}\times\frac{64}{72}\right)=40+\frac{56}{36}=41^{5}/_{9}$ = new numerator, and $\frac{41^{5}/_{9}}{374}={}^{2}/_{18}$ = movement of index-crank as required.

Computing Change-gears for Cutting Spirals.—In the common spur-gear all the elements of the teeth are parallel to the axis of the gear. In the *spiral gear* the teeth form helical grooves around the gear-blank. The spur-gear is stationary under the cutting, except that it is fed in a straight line to the cutter. The spiral gear, in addition to the feed, is given a rotary motion on its axis. The *linear advance* or feed of the gear to one revolution (although most spiral gears are too short to make a revolution for each tooth) is termed the *lead*.

Fig. 611 shows an end view of an old dividing-head. The screw which feeds the table is shown in cross-section marked S 2. This feed-screw is operated by the regular feed mechanism, and the blank to be cut is rotated by a train of gears the first of which is keyed to this screw, the last being the miter-gear T referred to in connection with Fig. 603. The other miter-gear having immediate connection with T is on the inner end of shaft S 1 in Fig. 611. This plate shows the train of gears connected ready to cut a spiral. The first of these gears, marked G 1, is called *gear* on *screw;* the second, G 2, is *first gear* on *stud;* the third, G 3, is *second gear* on *stud;* and the fourth, G 4, is called *gear* on *worm*. The table (and of course the gear-blank with it) is set to an angle conforming to the angle of the spiral to be cut, and the combined rotary motion and linear advance of the gear-blank give the helical curve to the teeth. The principles involved are the same as in screw-cutting in the lathe, and the change-gears are computed in practically the same manner.

Now, let it be required to cut a spiral of 36″ lead. The screw S is of $^{1}/_{4}$″ lead. It will, therefore, have to make $4\times36=144$ revolutions to advance the miller-table and gear-blank 36″. The worm-wheel, as we have already seen, has 40 teeth, and as one turn of the worm moves the worm-wheel only one tooth, the worm-shaft O, Fig. 603, will have to make 40 turns to 144 turns of the screw. With a worm-gear of 144 teeth and a gear of 40 teeth on the screw, or any two gears of this proportion, we could cut the spiral; but we have not these gears. We

shall, therefore, have *to use such gears as are furnished* with the machine. Among the latter gears are gears with 32, 40, 64, and 72 teeth. The machine is designed to use compound gearing, and we may compute the required gears by the following formula, in which L equals the lead of

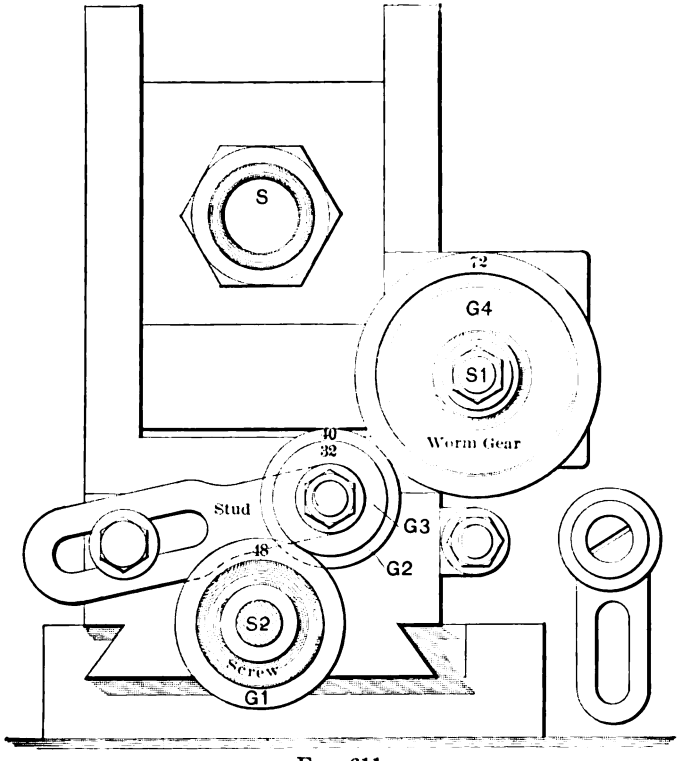

FIG. 611.

the required spiral, 4 the revolutions of S 2 to 1″ advance of table, 40 the teeth in the worm-wheel, G 1 number of teeth in gear on screw, G 2 number of teeth in first gear on stud, G 3 number of teeth in second gear on stud, and G 4 number of teeth in worm-gear. The positions of these various gears will be clearly understood by referring to Fig. 611. The formula is:

$$\frac{L\times 4}{40}=\frac{G\,3\times G\,4}{G\,1\times G\,2}.$$

L equals 36 in this case, so the formula becomes

$$\frac{G\,3\times G\,4}{G\,1\times G\,2}=\frac{36\times 4}{40}=\frac{\text{Lead}}{10}.$$

If we select 40 and 64 for the first two gears we must divide the fraction $^{40}/_{144}$ by $^{40}/_{64}$ to find the mating gears. Dividing thus we have $\frac{40}{144} \times \frac{64}{40} = \frac{1}{2^1/_4}$. The worm-gear must then be $2^1/_4$ times as large as its mating gear. Multiplying 32 by $2^1/_4$ we have 72 for G 4 or the worm-gear. The gears complete, then, for cutting a 36″ spiral are 40, 64, 32, and 72, answering to G 1, G 3, G 2, and G 4 respectively.

Milling Bolts and Nuts in Connection with Dividing-head.—One of the simplest operations in connection with the dividing-head is that of milling bolt-heads and nuts. In milling a bolt-head the bolt would generally be held between the centers of the dividing-head and foot-stock. The latter, which is shown in Fig. 606, is used very much the same as the tail-stock of a lathe. The bolt may also be driven by a lathe-dog, as in the lathe.

When a lot of nuts are to be milled, a number of them are milled at one time. For this purpose they are placed upon a *special plain* arbor and held fast between a shoulder on the arbor and a nut on its end, the arbor being held between centers as in the previous case. Figs. 612 to 614

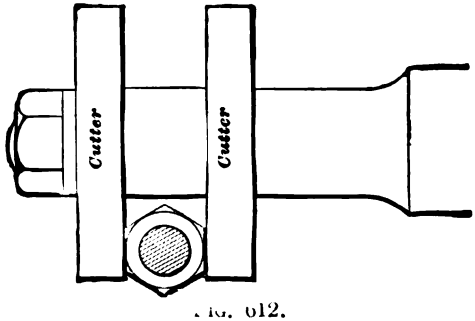

Fig. 612.

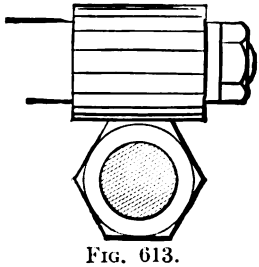

Fig. 613.

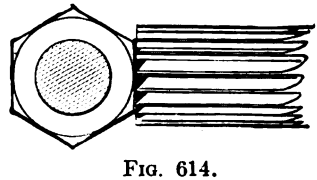

Fig. 614.

show three different cutters and methods for milling such work. The *straddle*-mill, Fig. 612, is of course the quickest for shapes having an even

number of sides. One method of adjusting the work for the straddle-mill is to raise the knee high enough to bring the arbor between the two cutters, and then make the spaces between the arbor and the sides of the cutters equal.

Grooving taps and reamers is another class of work generally milled in connection with the dividing-head. The proportions of the grooves have been referred to elsewhere in this book. The indexing for such work is rather slow if the regular index-plate be used. Thus a 4-groove tap requires $\frac{40}{4} = 10$ turns of the plate for each groove. As has been intimated, such spacing as is needed for nuts, reamers, etc., can be done very quickly by the plate on the spindle.

Micrometer Measurements in the Miller.—The micrometer-disks, or dial-plates on the feed-screws of the miller afford a very convenient means of measuring depth of cut, etc. These disks are generally graduated to thousandths of an inch and sometimes to half thousandths. Thus if required to mill 1″ round stock to hexagonal shape, $^7/_8$″ across flats, by the method of Fig. 613, we would first raise the knee until the stock just touched the *revolving* cutter. This may be called the *zero position* of the work.

To correspond with this we set the micrometer-disk (or pointer) to its zero position. Having made these adjustments the knee is next raised until the pointer indicates $62^1/_2$ thousandths, when the milling may be begun. The same principles will, of course, apply in adjusting the other feed movements. In all cases the *backlash must be taken up* before adjusting the pointer.

Special Dog for Taper-milling.—In milling taper work between centers the dividing-head may be rotated slightly to lower its center, or the center in the foot-stock may be raised. In either case the common lathe-dog, on account of the changing contact of its tail with the slot of the driver, causes irregular spacing and gives trouble otherwise. A dog made like that of Fig. 615 should be used. The tail of this dog is cylindrical, and is offset so that the dog may be so adjusted as to cause the center line of the cylindrical part to pass through the center of contact between the work-center and the dividing-head center. It is important also that the slot in the driver be parallel and adjustable. The driver shown in the illustration meets the requirements. The upper illustration is given merely to indicate the difficulty in using a common dog.

In some instances one end of the work is driven in a chuck screwed on the end of the dividing-head spindle. In such a case special care

is required to have the spindle in exact alinement with the foot-stock center. The adjustment provided in the dividing-head and foot-stock is sufficient for ordinary tapers.

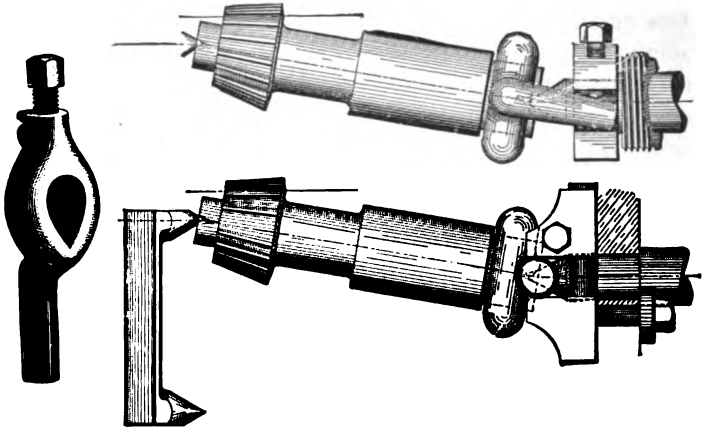

FIG. 615.

Taper Attachment for the Miller.—When much taper work is to be done in the miller an attachment like that of Fig. 616 will be advantageous. The shank of the center seen at the left end of the attachment fits the taper socket of the dividing-head spindle. The other end is held in the slotted knee-plate as shown. The attachment carries its own foot-stock, which is longitudinally adjustable. This device

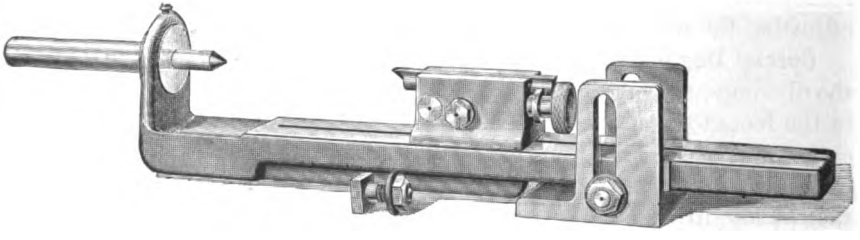

FIG. 616.

may be angled to the extent of 10°, and the alinement of the centers will in nowise be disturbed.

Milling Abrupt Angles.—In milling abrupt angles the foot-stock is not used. In some cases angular work is held in the chuck; in other cases it may be held on an arbor the shank of which fits the head spindle. The latter method is illustrated in Figs. 617 and 618.

The Use of Chucks in the Miller.—As intimated the chuck is used to some extent in connection with the dividing-head. The work gripped in the chuck is principally of small diameter and the Universal chuck is generally preferred.

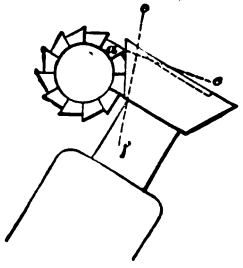

FIG. 617.

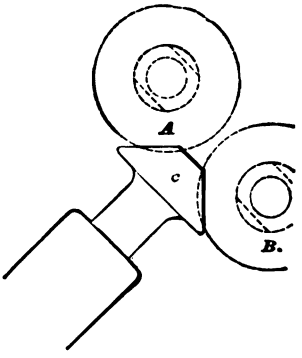

FIG. 618.

The draw-in chuck as used in the lathe has been described elsewhere. Fig. 619 shows this chuck as adapted to the spindle of the dividing-head. Small rods, screws, etc., may be very quickly and accurately milled in connection with this chuck. For instance, if required to cut slots in a small number of screw-heads, the screws might be gripped one at a time in this device by merely tightening the hand-wheel, the slots being cut by feeding the knee vertically to the revolving cutter. However, when a large number of screws are to be slotted the work can be performed more economically in a special fixture which holds a number of screws. Fig. 619 is taken from an article by A. L. Monrad in "American Machinist," vol. 27, page 153.

Selecting Gear-tooth Cutters.—In cutting a gear it is necessary to know the pitch and number of teeth in the gear in order to select the cutter. The gear-tooth cutters generally used are made according to the Brown & Sharpe system. In the involute system eight cutters are required for each pitch. The range covered by each cutter is given in the following table:

No.	1	will	cut	wheels	from	135	teeth	to	a rack	
"	2	"	"	"	"	55	"	"	134	teeth
"	3	"	"	"	"	35	"	"	54	"
"	4	"	"	"	"	26	"	"	34	"
"	5	"	"	"	"	21	"	"	25	"
"	6	"	"	"	"	17	"	"	20	"
"	7	"	"	"	"	14	"	"	16	"
"	8	"	"	"	"	12	"	"	13	"

In the *epicycloidal* system there are twenty-four cutters to a set. The first cost of these cutters is, therefore, greater than that of the involute. Gears cut with an involute cutter have the further advantage

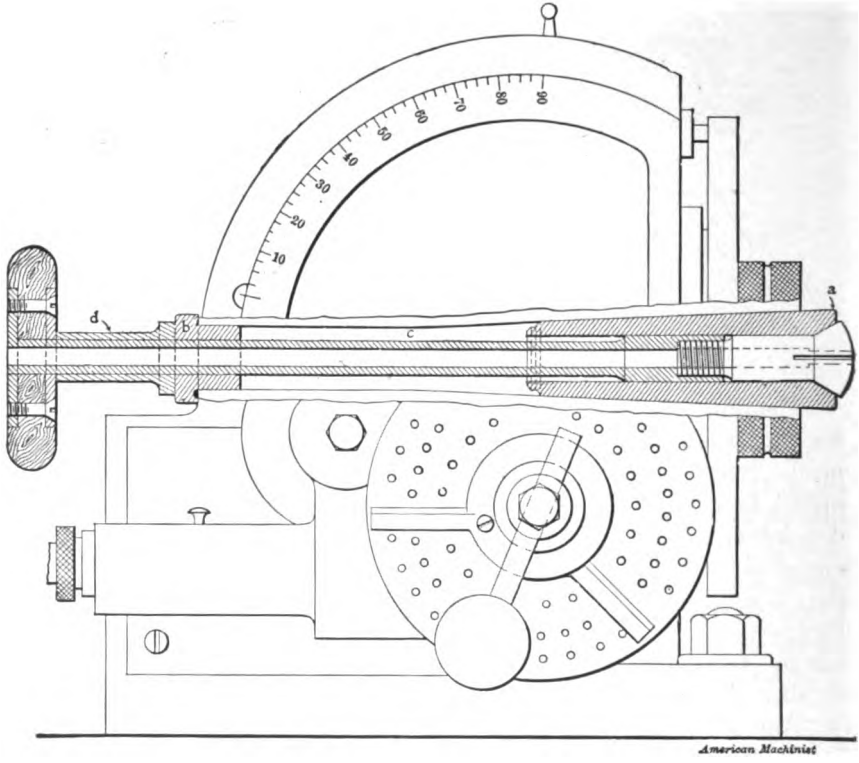

FIG. 619.

that they do not necessarily require such an exact adjustment of the distance between shaft-centers as do epicycloidal gears. For these reasons epicycloidal gears are in a large measure being superseded by the involute.

The pitch of a gear is designated in two ways: first, it means the distance between centers, measured on the pitch-circle, of two adjacent teeth. This is termed the *circular* pitch. Second, it means the number of teeth in the gear to each inch of its pitch-diameter. This is the *diametral* pitch. We shall use the latter definition here.

The cutter which is right for a spur-gear is too thick for a bevel-gear of the same pitch. Cutters for bevel-gears are made on the assumption

that the length of the tooth-face is not greater than one third the distance from its outer end to the intersection of the axes of the two shafts. Cutters for longer faces will be made to order. In selecting a cutter for a bevel-gear we do not make use of the actual pitch-diameter, but a diameter equal to twice the back-cone radius *ab* for the large gear, and twice *bc* for the small gear (see Fig. 620). If *bc* equals 2″ and the gear

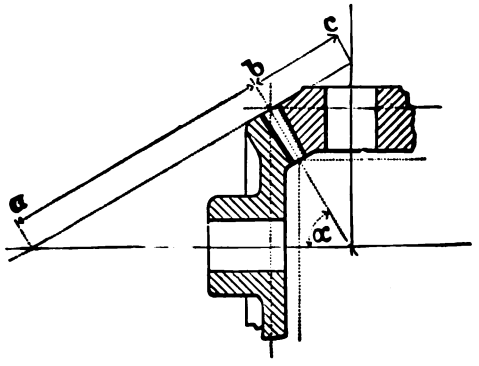

FIG. 620.

is to have 12-pitch teeth, we should select a cutter for $4 \times 12 = 48$ teeth. By reference to the table it will be seen that a No. 3 cutter would be required. For this gear, therefore, we would order a No. 3, 12-pitch *bevel* cutter. The large gear would require a different number of cutter.

The depth of the tooth space must also be known. This equals $\frac{2.157}{P}$ when P equals the diametral pitch. The depth of space in the above gear would be $\frac{2.157}{12} = .180''$. This is the depth at the outer or larger end of the tooth. It is also the depth in a spur-gear, the space in such gears being of equal depth at each end of the tooth.

Cutting a Spur-gear in the Universal Miller.—The term "spur" is a general term applied to a gear whose tooth elements are parallel to the axis of rotation of the gear. Gears shown in Figs. 621 and 622 are spur-gears. There are two ways of holding the gear while cutting the teeth. First, it may be driven tightly on an arbor and caused to revolve with the dividing-head spindle by one end of the arbor fitting a taper-hole in the dividing-head spindle. Second, the gear may be driven on an arbor which is supported between the dividing-head and foot-stock, as in a lathe. In this case the tail of the dog engages with a slot in the face-plate or driver, and the latter is provided with a set-screw which is

so adjusted against the tail of the dog as to prevent any "play" or shake of the dog and arbor. Any looseness at this point will cause *irregular* spacing of the gear-teeth.

As indicated elsewhere, the cutter is carried by an arbor fitting in the socket-hole in the end of the miller-spindle, its position on this arbor being regulated by slip-collars. The gear-blank should be so placed in relation to the cutter that a vertical plane at right angles to the axis of the cutter-arbor shall pass through the centers of the cutter and gear axis, as shown in Fig. 626. This is done by so adjusting the clamp-bed on the knee as to bring the cutter central with a center line on the foot-stock, or with a mark on the dividing-head when the foot-stock is not used. The knee is next adjusted vertically until the cutter, while revolving, will just touch the top of the gear-blank. This is the *zero position* of the cutter. The vertical travel of the knee is measured on a dial-plate, as was explained, and the dial-pointer should now be set at zero to agree with the position of the cutter. The table should next be moved lengthwise to take the gear from under the cutter, and by means of the hand-wheel *E*, Fig. 546, the knee should be raised a distance corresponding to the depth the gear is to be cut. In adjusting the knee its gib-screws should be *slackened no more than necessary* to permit freedom of movement. If too loose the screws will, when tightened, raise the knee slightly and thus alter the previous setting.

In order to insure that the lost motion between the vertical screw and nut shall be downward, the *last movement of the crank should be in the direction to raise the knee.* If this is not properly attended to the reading on the dial will be unreliable. The dial for vertical adjustment is graduated in thousandths, and a complete turn of the dial-finger generally equals $^{100}/_{1000}''$. The depth for cutting a 12-pitch gear is $^{180}/_{1000}''$; the movement for this gear should, therefore, be $1^{80}/_{100}$ revolutions of the dial-finger.

Having properly mounted the gear and having made the adjustment as indicated we are ready to take the first cut. This is done by slowly feeding the gear against the revolving cutter a distance equal to the face or thickness of the gear plus clearance at each end. The table is now quickly returned to the starting-point and the gear *indexed* for the next cut. Care should be taken that the clearance on the entering end is such that during the time the gear is being indexed or turned for the next cut it *will not come in contact with the cutter.* The above operation is repeated for each tooth in the gear, and while turning the indexing crank, caution should be observed to prevent the pin *P* (Fig.

603) from striking and moving the sector; otherwise an error in the indexing would result. It should be noted also that the holes enclosed between the limbs of the sector must always be *one more than indicated by the fraction measured.*

Cutting Large Gears. Blocking up the Centers.—It is sometimes necessary to cut a gear of so large a diameter that the gear would strike

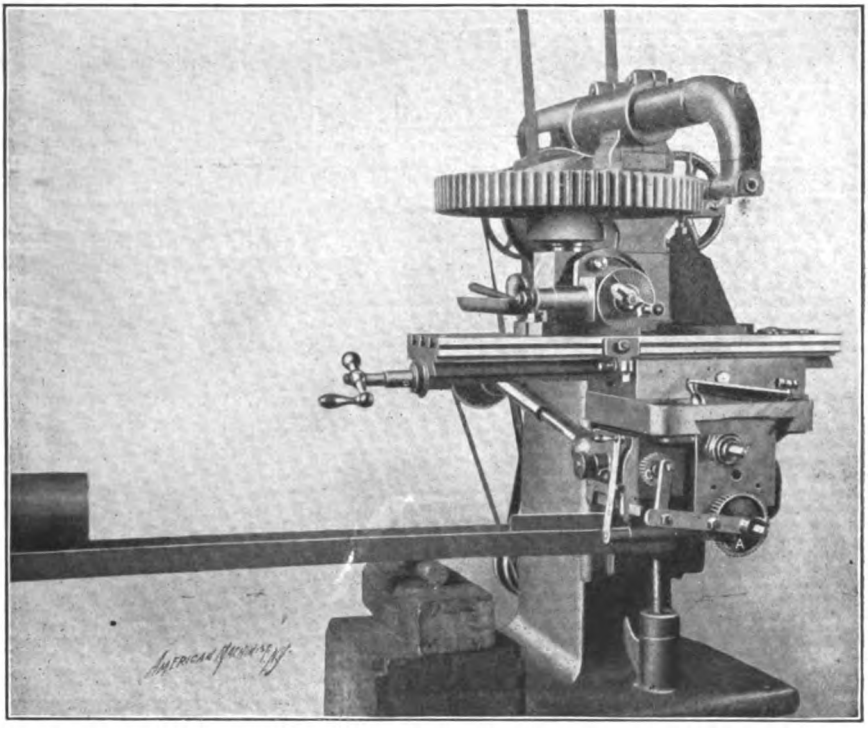

FIG. 621.

the miller-frame if carried on a horizontal arbor. In such a case the foot-stock may be dispensed with and the gear be held on an arbor in the dividing-head spindle as shown in Fig. 621.* In milling a gear by this method the pressure of the cut should be supported. The support should preferably be clamped to the table and its point of contact with the work oiled, so that it will not be disturbed by the rotation of the gear.

* This cut illustrates an article by Geo. J. Meyer in "American Machinist," vol. 26, page 1115.

The large back-gears on the miller shown in Fig. 552 were cut on a small miller by the above method.

The long lever and weight shown in connection with Fig. 621 were used to counterbalance the weight of the miller knee, table, etc.

Fig. 622 illustrates another method of cutting large gears. In this case the gear is held between centers, but it is raised above the cutter.

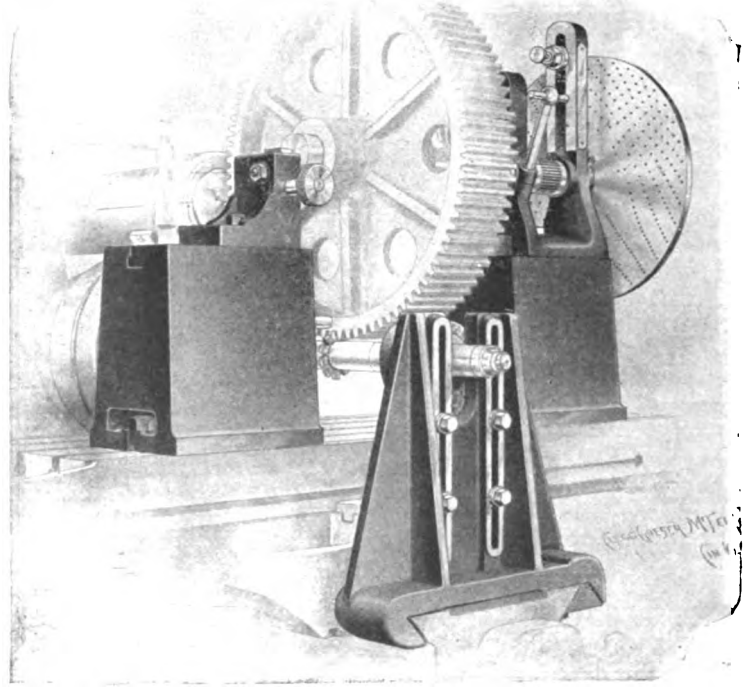

FIG. 622.

The dividing-head and foot-stock shown are of simple construction, and are called *plain index centers*.

The plan of *blocking up the centers* is suggestive of an expedient that is often adopted when the centers are too low.

Gears of average pitch are commonly cut with one traverse of the cutter for each space. The author has known gears as coarse as 3-pitch to be cut in this way. Many mechanics, however, prefer to take two cuts. The cutters last longer and do better work if kept sharp.

Cutting Worm-wheels.—Fig. 623 shows a perspective view of a worm and worm-wheel, in which *G* is the wheel and *W* the worm. It will be seen that the teeth form an acute angle with the bore of the wheel, and

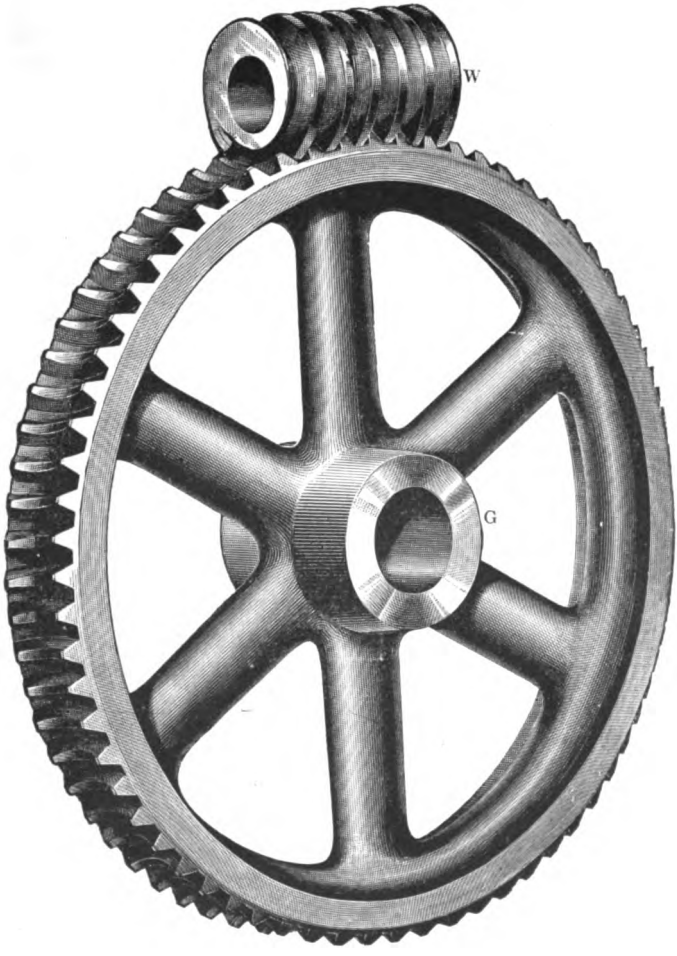

FIG. 623.—Worm and Worm-wheel.

that they are made concave to conform to the thread on the worm. To cut these teeth *two cutters are commonly used*, the first being a disk-cutter, as was used in cutting the spur-gear. In selecting this cutter we do not consult the table, but use any cutter which will leave the right amount for the hob. The latter is a kind of screw with cutting-edges somewhat

like a tap (see Fig. 624). The disk-cutter teeth must be thinner than the teeth or thread on the hob in order to leave some metal for finishing with the hob; and in using the disk-cutter the table must be swiveled to an angle which agrees with the angle on the worm-thread.

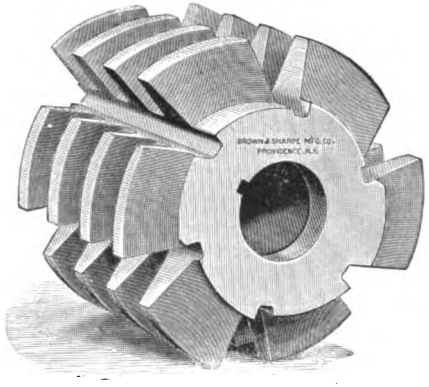

Fig. 624.

This angle may be determined by drawing a triangle the base of which is equal to the lead of the worm-thread and the altitude equals the pitch circumference of the worm. The angle formed by the hypotenuse and the altitude is the angle to which the table should be swiveled. As the first cutter merely roughs out the teeth a close *approximation* to the angle will answer.

Most of what was said in connection with spur-gears will apply equally well to worm-wheels. The wheel, however, must be held on an arbor between centers according to the second method described. The relation of wheel and cutter is shown in Figs. 625 and 626, and having made these adjustments the next thing is to swivel the table to the required angle and then raise the knee until the revolving cutter will just touch the two corners of the wheel as shown at *EE*, Fig. 625. Next, the table gib-screws are locked and the dial-pointer set at zero, when the teeth may be cut. In this operation we do not feed the table, but raise and lower the knee the required distance for each tooth.

There is or should be a line on the face of the column where the knee slides to indicate when the center of the dividing-head spindle is in the same horizontal plane as the center of the miller-spindle. The depth of the tooth-space is determined by raising the knee until the distance between the measuring surface on the knee and the center line agrees with the distance between shaft-centers as given on the drawing. For the roughing cut the wheel should be cut to within about $^1/_{64}$″ of the final depth.

Hobbing the Teeth.—After cutting all the teeth in this manner we take the disk-cutter and arbor out of the miller-spindle and use the hob. It is held on the arbor in the same manner that the disk-cutter is held. As the threads on the hob are of the same angle as the worm which is to operate the wheel, the table must now be swiveled back to its normal

position at zero. In hobbing the teeth the wheel is caused to turn by the interlocking of the hob and wheel-teeth as shown in Fig. 627. Therefore we do not need the index-plate for dividing. To permit the wheel to turn, the dog is removed from the gear-arbor. Before starting the hob

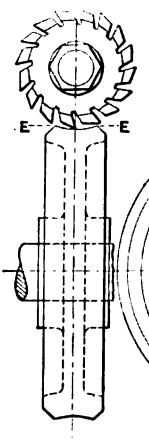

Fig. 625.

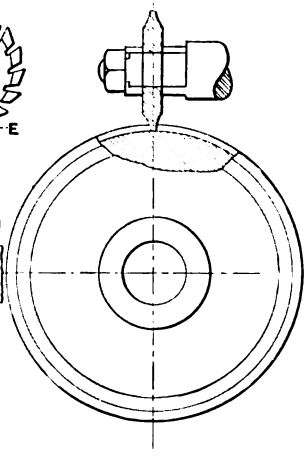

Fig. 626.

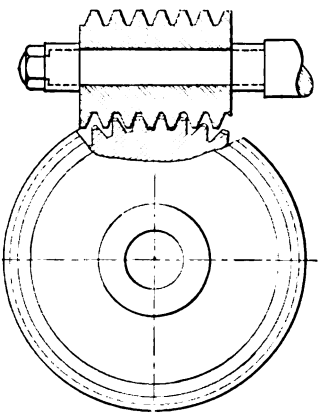

Fig. 627.

the knee is raised until the thread of the hob engages with the rough-cut teeth in the wheel. The machine is then started, and during the first two or three revolutions of the wheel, or until the hob-thread matches fairly with the wheel, the wheel is *helped around by hand*. Having made a chalk-mark on the wheel, the operator feeds the knee up a small amount for each revolution of the mark, and continues this process until the teeth are cut the required depth.

Worm-wheels are sometimes cast without the helical lines of the teeth, and they may be cut with the disk-cutter alone, but the area of the tooth contact in these wheels is considerably lessened, and consequently they will not be so durable.

When large quantities of worm-wheels are wanted they may be made more economically in a special machine. Such machines are so constructed that by a train of gears the worm-wheel is caused to rotate in unison with the hob. When this method is followed the preliminary roughing cut with the disk is dispensed with.

Cutting Teeth in Bevel-gears.—Fig. 628 shows a miter-gear mounted on an arbor in the dividing-head spindle, the dividing-head being the old design shown in Figs. 603 and 604. (It should be explained in this connection that a pair of gears of the same diameter and angles whose

axes intersect at right angles are called *miter-gears*.) The foot-stock cannot be used in cutting this gear. To avoid excessive deflection, the gear should be placed close to the end of the dividing-head spindle. It is held on the arbor by a nut. If the gear be of such a size and angle that the nut would interfere with the cutter, the nut may be either reduced in thickness or omitted. In the latter case the arbor should fit the gear sufficiently tight to be held by friction.

The gear *must be set central* under the cutter as in the case of the spur-gear. The dividing-head is graduated along the edge A, and it must be set to the cutting angle, which angle is given on the drawing. When thus adjusted it is clamped by the nut N. The side, top, and bottom lines of the teeth converge in C, and consequently when the gear is set to the cutting angle the face HF will not be horizontal. When the cutter is in the zero position its center will be in the same vertical plane as is the *highest* part of the edge H, as shown in Fig. 628. To find this position the cutter is rotated, and while the table is fed back and forth about one half inch the knee is raised until the cutter touches at H. Next the table is moved in the direction of arrow 7 and the knee raised the required depth of the tooth space.

Having arranged the index-plate, we now proceed to rough-cut the gear. We cannot finish the teeth in cutting around *once*, because the space between the teeth must be wider at H, and the first cutting will not give this result. In Fig. 629 the blank spaces show the grooves made in the first cutting, while the dotted lines show the spaces as they will appear when finished.

It will be understood that both the teeth and the spaces are tapering; and having taken the first cut around the gear the metal left between the dotted line D and full line L must next be cut away. To effect this the *dividing spindle is rotated or swiveled slightly* on *its* axis. This operation moves any point H, on the greatest diameter of the gear, farther than F on the small diameter. If the student does not understand why this enables us to cut more from the thick end of the tooth than from the thin end it may be made clearer by the following reasoning. It is evident that if the gear be rotated, H will move a greater distance than F; for C, which is a prolongation of HF, being a point on the axial line of the dividing-head spindle, does not move at all This being true, any point between H and C, on the line HFC, must move a shorter distance than H. It should be clear, then, that the spaces between the teeth may be made tapering by slightly rotating the gear and moving it laterally in the opposite direction. This being

repeated on each side, and the gear fed to the cutter in each instance, the space will be made tapering symmetrically with respect to its center line. The *thickness should be marked off* on one or two teeth as a guide to cut by.

It will be necessary to explain why the gear is moved laterally when swiveling for a taper. It is found that when the gear is swiveled sufficiently to give the correct taper to the teeth the latter would be cut too thin did we not make another adjustment to offset this. This adjustment consists in moving the gear laterally by the hand-wheel *J*, which moves the clamp-bed (see Fig. 546). This tapering process can be best

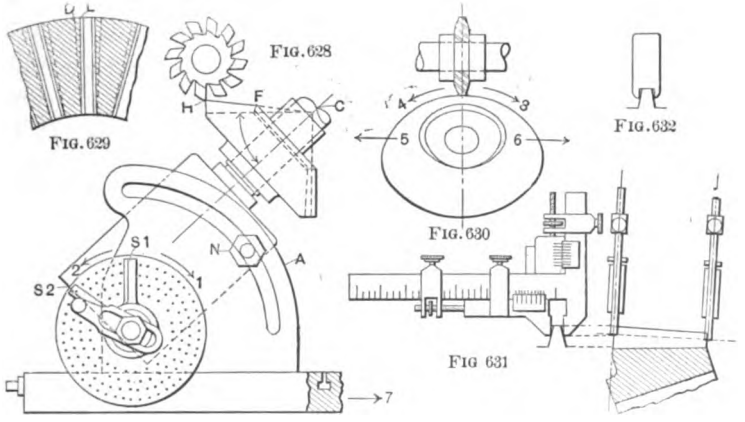

explained by considering the operation of cutting a miter-gear of some definite size, say 12-pitch, 40 teeth, on a No. 1 B. & S. miller. The index-plate used for this gear has among the circles one circle of 39 holes. To thin the tooth next to the left side of the cutter (looking at Fig. 630) the index-crank is turned in the direction of arrow No. 1, 5 spaces of the 39 circle. This turns the gear toward arrow No. 3. To avoid cutting too much off the tooth the gear is now moved laterally .018″ in the direction of arrow No. 5. As stated, this movement is effected by moving the hand-wheel *J*, Fig. 546. With this new position of the index-crank for a starting-point, the teeth may now be finished on one side. After completing one side, the index-crank is turned 10 spaces (or 5 spaces from the original position) toward arrow No. 2, and the clamp-bed is moved to take the gear .036″ (or .018″ from the original position) toward arrow No. 6, Fig. 630. Dividing the gear from this new position of the index-crank, we proceed to finish the opposite sides of the teeth.

The thickness and addendum should be given on the drawing for each end of the tooth, and this may be measured by a gear-tooth Vernier caliper as shown at Fig. 631. In the absence of such an instrument the gage shown in Fig. 632 may be used.

It has been found somewhat difficult to convey to the student a clear idea of the last part of bevel-gear cutting. It may be well, therefore, to repeat the instruction for tapering the teeth. Thus, to take the first tapering cut we move the *index-crank toward arrow No. 1, 5 spaces on the 39 circle*, and move the *clamp-bed .018" toward arrow No. 5*. To trim the opposite side of the tooth we move the *index-crank toward arrow No. 2, 10 spaces* from *last position* and move the *clamp-bed .036"* from last position in the *direction of arrow No. 6*.

It is important to observe in this connection that in adjusting the gear laterally the *lost motion in the screw must be kept in one direction.* Thus, having turned the hand-wheel of the clamp-bed through an arc which moves the dial-pointer .018" to the left of zero, in moving to the opposite side it *would not answer to merely move it .036" backward.* This would reverse the lost motion; and while the hand-wheel would move through an arc corresponding to .036", the clamp-bed would move less. In moving to the opposite side of zero the dial-pointer should be turned backward about one half of a revolution and then be moved forward and stopped .036" short of the previous position. By this method the lost motion does not interfere with the reading on the dial, because, notwithstanding the hand-wheel moves in opposite directions, its final movements are in one and the same direction for the two opposite adjustments of the clamp-bed.

It should be explained that while the amount of the lateral and swivel movements for tapering the teeth of one particular gear are here given, these adjustments may not apply to a different gear. In practice these adjustments are found by trial and error, and when thus found the operator makes memoranda of them, and thus saves doing the work again for duplicate gears. It should also be noted that in practice the first or parallel cut is not made except in coarse pitches, but it may be well to have the beginner make the three cuts.

Common Method not Theoretically Correct.—The tooth of a bevel-gear varies in curvature between the thick and thin end, but the disk-cutter will not make such curvature. The method here outlined, though commonly used in practice, is, for the above reasons, not theoretically correct. The cutter cannot be right for both ends of the tooth, and the usual practice is to select a cutter of correct shape for the *thick*

end, as has been explained, and correct the remainder of the tooth by filing. Some prefer to use a cutter of correct shape for the *center of the tooth*. In this case the thick end of the teeth will be too much rounded, but for most purposes the gear will be fairly satisfactory *without any filing*.

When bevel-gears are to run at a very high speed, or have very long faces, the method of cutting the teeth here described is not very satisfactory. For such gears there are machines in use which will cut the teeth theoretically correct, but the process is slower and more expensive than the one above explained.

Cutting Rack-teeth.—The attachment shown in Fig. 599 is a very satisfactory device for cutting racks in the miller. If the rack is not greater than about 8″ long it may be held in a common miller vise, but a long rack is best held in a special fixture. If two or more be held in the vise or fixture the cut may be made through all of them in one operation. The depth of space is measured in connection with the graduated dial, the same as in cutting the spur-gear, but the teeth are spaced by an entirely different method. The distance between the centers of the teeth is, of course, the circular pitch, and when the diametral pitch only is known, the circular pitch is found by dividing 3.1416 by the diametral pitch. Thus the circular pitch of a 12-pitch gear equals $\frac{3.1416}{12} = .262''$. Now having a graduated dial on the table-screw it is a very simple matter to feed the table by hand .262″ for each tooth, the rack being fed to the revolving cutter by the hand-wheel which moves the clamp-bed.

When large numbers of racks are required it sometimes pays to purchase a special rack-cutter. Some of these machines are so constructed that a number of cutters may be strung together on the same arbor, so as to cut as many teeth in one operation as there are cutters. Now if there are, say, 6 racks clamped to the table, then six times as many teeth as there are cutters may be cut in one operation.

Direction of Rotation of Cutter.—Milling-machines are commonly equipped with both forward and backing belts, and the beginner needs to be informed as to the proper relation between the direction of table movement and cutter rotation. It takes but little experience to learn that, with rare exceptions, the work should be fed *against the front or cutting faces of the teeth*, as at *A*, Fig. 633. If the feed be "with the teeth," as at *B*, the work is likely to be pulled forward an amount equal to the freedom or *backlash* in the screw or rack. This causes the cutter to dig in, and sometimes breaks the teeth.

The best authorities say that the cutter will remain sharp much longer when the work is fed as at *A*. This is certainly true when surfacing a rough casting. The reason is that after the cutter has entered the work it no longer attacks the hard scale from above, but breaks it off from

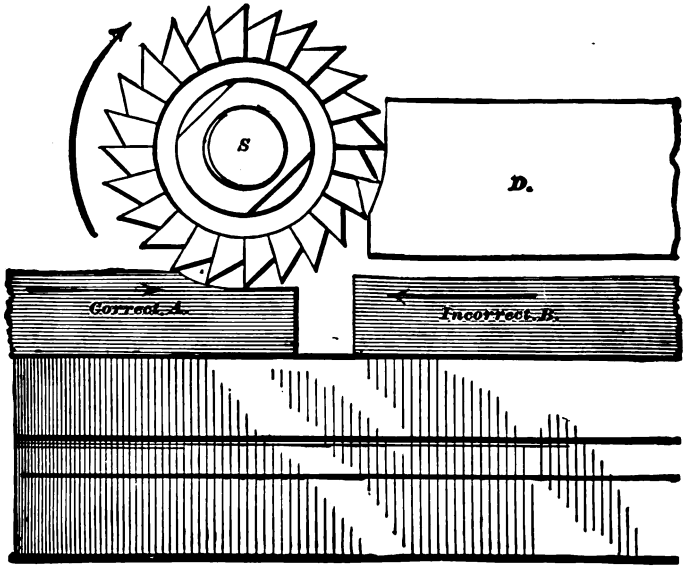

FIG. 633.

below. In the latter case the scale has but little support and yields with light pressure.

The reasons given for running the cutter with the feed seem to have but little weight. There is one case, however, in which it may be advantageous to run the cutter in this way. It is that of milling a deep slot with a cutter, say, $^1/_{16}$ to $^3/_{16}$ inch thick. In this work the cutter is very likely to make the slot crooked. Better results may possibly be obtained in such work with the cutter running with the feed as at *B*. In the latter case the *table gib-screws* should be *somewhat tighter* than usual. The same precaution should be used when the cutter is cutting both top and bottom at the same time, as in Fig. 580. Some workmen counterweight the table in such cases.

It should be observed that the common size cutters are held on the arbors by friction between the cutters and the collars, these being bound together by the nut on the outer end of the arbor. Now, as the miller-spindle runs in both directions, some of the arbors must have right-hand

thread and some left-hand thread. When the cutter runs clockwise, the arbor with left-hand thread should be used and vice versa.

Speed and Feed of Milling-cutters.—In some of the examples of milling the speed, feed and depth of cut have been given. These rates apply to *particular cases* and are supposed to represent *rapid* work. It is difficult to give a general rule. The depth of cut, character of material, number of teeth in the cutter, etc., are factors which must be considered. The Brown & Sharpe Manufacturing Company, in their book entitled "Construction and Use of Milling-Machines," after acknowledging the difficulties of the problem, say: "The average speed on wrought iron and annealed steel is perhaps 40′ a minute. . . . The feed of the work for this surface speed of the cutter can be about $1\frac{1}{2}$″ a minute and the depth of cut, say, $\frac{1}{16}$″. In cast iron a cutter can have a surface speed of about 50′ a minute, while the feed is $1\frac{1}{2}$″ a minute and the cut $\frac{3}{16}$″ deep, and in tough brass the speed may be 80′, the feed as before, and the chip $\frac{3}{32}$″."

But as showing how the speed may be increased under favorable conditions the same authority cites cases in which cutters have been run in their own works at 125′ per minute, while the work was fed more than 8″ a minute. In the cases referred to the work consisted of short pieces of annealed cast iron and the cut was only $\frac{1}{32}$″ deep.

In the book above mentioned an English authority is quoted as proposing the following speeds and feeds for cutters 6″ diameter and upwards:

Steel.....	36	feet per minute with a feed of	$\frac{1}{2}$″ per minute
Wrought iron...	48	" " " " " " "	1″ " "
Cast iron.....	60	" " " " " " "	1″ " "
Brass.....	120	" " " " " " "	1″ " "

The same book quotes another authority to the effect that in milling wrought iron with a cut 1″ deep (note that this is quite different from mere surface milling) a surface speed of 36 to 40 feet was all that was practicable.

The speeds above given were doubtless meant to be used in connection with ordinary tool-steel cutters. With *high-speed steel* greater speeds should be practicable. In this connection read pages 123 and 173 on high-speed steels.

The following is taken from a card of instructions written by the author and posted near the milling-machine at the Michigan Agricultural College:

INSTRUCTIONS FOR USE OF ARBORS ON THE MILLING-MACHINE

Before inserting the cutter-arbor see that both the arbor and socket in the end of the spindle are clean. The spindle socket may be cleaned by wrapping waste around a stick and swabbing out the socket while the spindle is revolving. *Dirt, or hammer-marks on the arbor will cause it to revolve eccentrically.*

The same precautions are necessary in connection with the slip-collars on the arbor. The smallest speck of grit between these collars will cause the arbor to be bent when the clamping-nut is tightened. Therefore these *collars must also be carefully cleaned.* The collars furnished with the arbor are made of tool steel hardened and ground, and cast-iron collars must not be used. The objection to the cast-iron collar is that it is easily bruised in use. The slightest lump made on the face of the collar in this manner will have the same effect as a particle of grit, i.e., it will cause the arbor to be sprung when the clamping-nut is tightened.

Both the *cutter-arbor** and the *arbor used in dividing-head spindle must be driven in tightly.* Use the rawhide mallet, or the hammer and a block of hard wood. *When not tightly secured the arbors are likely to get loose and spoil the work.*

If the arbor which holds the work be used between centers, the set-screw in the driver on dividing-head spindle must be closely adjusted against the tail of the dog on the arbor; otherwise there will be an error in the dividing. If the arbor be held in the socket of the dividing-head spindle, both socket and arbor must be carefully cleaned according to instructions respecting the main spindle socket.

A gear or other *work held on an arbor in the dividing-head spindle should be placed as close to the spindle as practicable* to avoid deflection.

---

*So far as the cutter-arbor is concerned, this paragraph was meant to apply more particularly to a miller which lacked the overhanging arm.

CHAPTER XXVII

SPECIAL GEAR-MACHINES

The Gould and Eberhardt Automatic Gear-cutter. — The adaptation of the universal miller to gear-cutting has been briefly described.

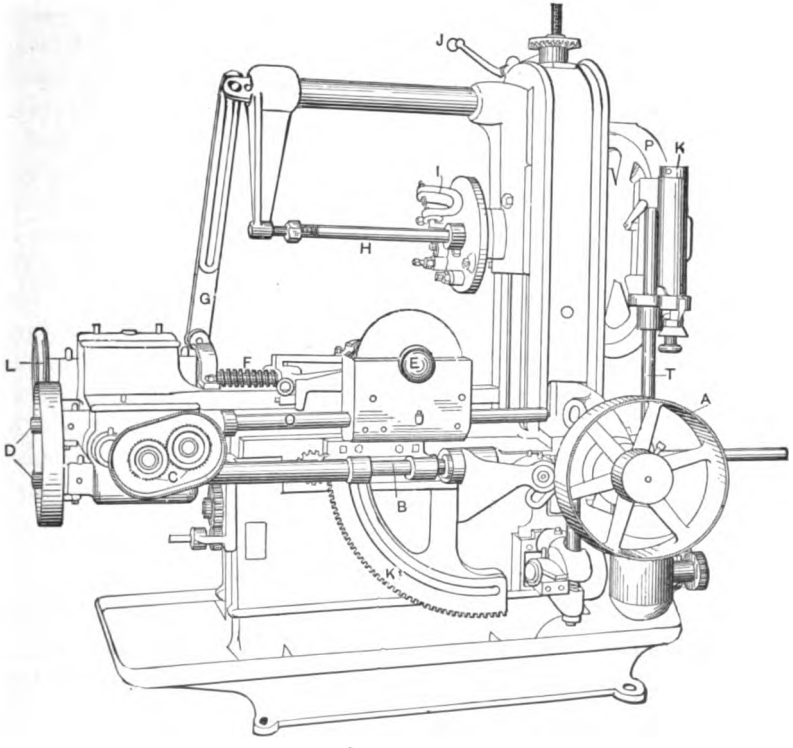

FIG. 634.

An automatic gear-cutter used for gear-cutting only is shown in Figs. 634 and 635. This machine cuts spur-, bevel-, skew-, and face-gears. As a rotary-disk cutter is employed, the machine might be considered as a special form of miller. However, there are important differences

in the construction and operation of the two machines. In the automatic gear-cutter, in addition to the rotary motion, the cutter is given a traversing motion. In other words, the cutter is fed to the gear instead of the gear being fed to the cutter. The indexing system is also different, as will be presently shown.

Referring to Fig. 634, the driving-pulley *A* is mounted on a sleeve-bearing, so that the pulley-shaft is relieved from the side strain due to the pull of the belt. By means of a pair of miter-gears motion is communicated from the shaft of *A* to the side-shaft *B*. The shaft *O* seen just above *B* is driven from the latter by spur-gears. The end of the cutter-spindle is seen projecting at *E*. This spindle is driven by worm-gearing, the worm being splined to shaft *O*. At *C* are shown a pair of spur-gears which may be changed for other gears having different ratios. These are the "change-gears," by which the velocity of the cutter-spindle is varied. The cutter-slide is fed by screw *F*. This screw is operated by gears *D*, which may be changed to give different rates of feed.

Enclosed within a gear-guard at *P* is the dividing worm-wheel. This worm-wheel serves the same purpose as the worm-wheel in the dividing-head in the milling-machine. *P* is operated by a worm on *K*, which in turn is driven by the vertical shaft *T* and spur-gearing. The gear to be cut is held on the arbor *H*, the outer end of which is supported as shown. The arbor and gear are driven by driving fixtures secured to the face-plate near the right of *H*. In cutting a gear having arms or spokes, one of the spokes engages with the U-shaped carrier shown at *I*. The gear, and with it the dividing worm-wheel, etc., is raised by a screw and bevel-gear mechanism shown at the top of the machine, this being operated by the crank *J*. The crank-shaft is provided with a dial graduated to thousandths of an inch, by which the depth of cut is measured.

In cutting bevel-gears the cutter-slide is elevated to the required angle by means of a crank applied at *M*. (See Fig. 635.) As shown, this crank turns a worm operating a cross-shaft by means of a worm-wheel. On this cross-shaft are two pinions meshing with the slotted quadrant *K* 1. When raised to the required angle the quadrant is locked by means of a nut seen to the left of the worm-wheel. In cutting bevel-gears in this machine at least two cuts (sometimes three) must be taken, one on each side of the tooth. For this purpose the cutter-slide is arranged to swivel a slight amount to the right and left of the center line. When three cuts are taken, one is a central cut. This central cut is made for the same purpose that a central cut is some-

times made in cutting a bevel-gear in the miller. When the cutter-slide is raised and swiveled it carries the left section of shaft *B* (Fig. 634) with it. To provide for thus raising shaft *B*, it is connected to a short shaft at its right end by a universal joint.

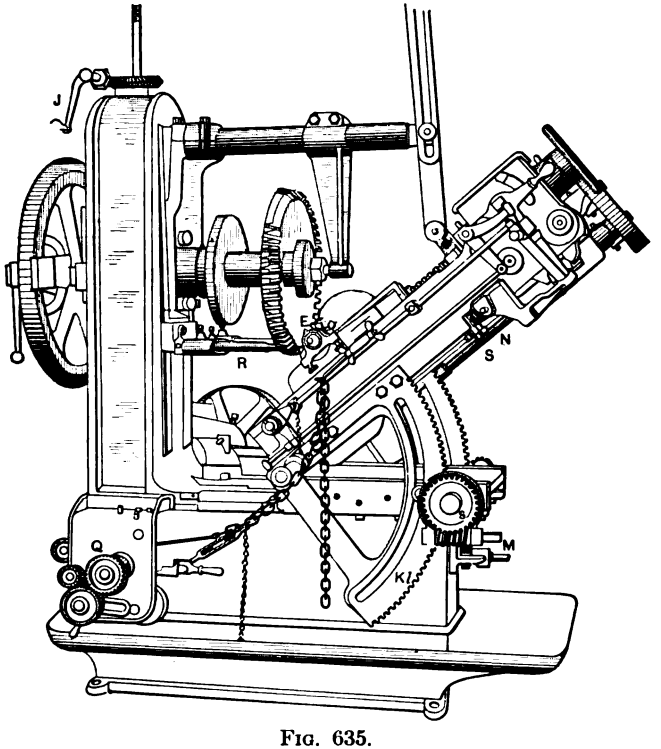

FIG. 635.

The pressure of the cut in cutting both spur- and bevel-gears is sustained by the adjustable support *R*.

The Indexing Mechanism.—The change-gears shown at *Q* in Fig. 635 are connected by shafts and gearing to the indexing worm-wheel. In the casing behind this gearing is a locking device which makes one revolution for each spacing of the gear being cut, regardless of the number of teeth in the latter. To give this locking device one revolution, the gears at *Q* are changed for each different number of teeth in the gear being cut. The locking device is made with extreme accuracy, and its operation is such as to eliminate all errors due to the wear of change-gears and connecting-shafts.

Construction of the Dividing Worm-wheel.—When a very accurate worm-wheel is required, it is customary to make the rim in two separate rings, and bolt these together. The object of this construction is to avoid possible errors in hobbing the teeth. The correction is made as follows: Having hobbed the worm-wheel once around, before the final cut is taken the removable section is turned one-half revolution and the hobbing is repeated. This divides up minute errors which may occur in the first hobbing. In making the dividing-wheel of the machine under consideration this shifting and re-hobbing is repeated a number of times, thus further eliminating the possibility of error.

With the exceptions noted above in the description, the cutting of gears in the automatic gear-cutter does not differ greatly from the method used in the miller. It will be understood, however, that as the indexing, feeding back and forth of the cutter, etc., are all automatic, the chances of error are reduced to a minimum, and one workman can operate several machines. Having started the cutting of a gear, the machine automatically makes all the movements necessary to complete the gear, and when completed a gong is automatically sounded, notifying the workman that the gear is ready to be removed.

Gang-cutters.—The manufacturers of the machine just described make cutters which may be used in gangs for cutting gears having more than 30 teeth. The object is the same as in the case of cutting rack-teeth with gang-cutters. From 2 to 12 cutters, according to the number of teeth in the gear, may be used. As these cutters must have proper contact on the periphery of the gear-blank, it is evident that the cutters will be of varying diameter. The hub thickness or hub length of the cutters must be gaged very accurately to bring the cutters the right distance apart. Special precautions are required in using these cutters, and the gear-blanks must be quite accurate as to diameter; but when a large number of gears of one kind are required, the great saving in time fully justifies the extra care required.

Fellows Gear-shaper.—Theoretically, cut gears should require a different cutter for every different number of teeth in the gears. Therefore cutters made on the principle of the set of eight involute cutters previously referred to, while sufficiently correct for all ordinary purposes, cannot be absolutely right. Where greater accuracy is required the manufacturers of these cutters furnish them in sets having a greater number of cutters to each set, and they will also make special cutters to order. However, the machine shown in Fig. 636 is designed to *regularly* make gears of *theoretically correct* tooth outline.

Imagine a gear-blank of some plastic material held upon an arbor and a complete gear secured to another arbor parallel with the first. Now, let the gear be pressed into the blank to the correct tooth-depth and caused to make one complete revolution. Assuming that there is perfect rolling contact between the pitch-line of the blank and that

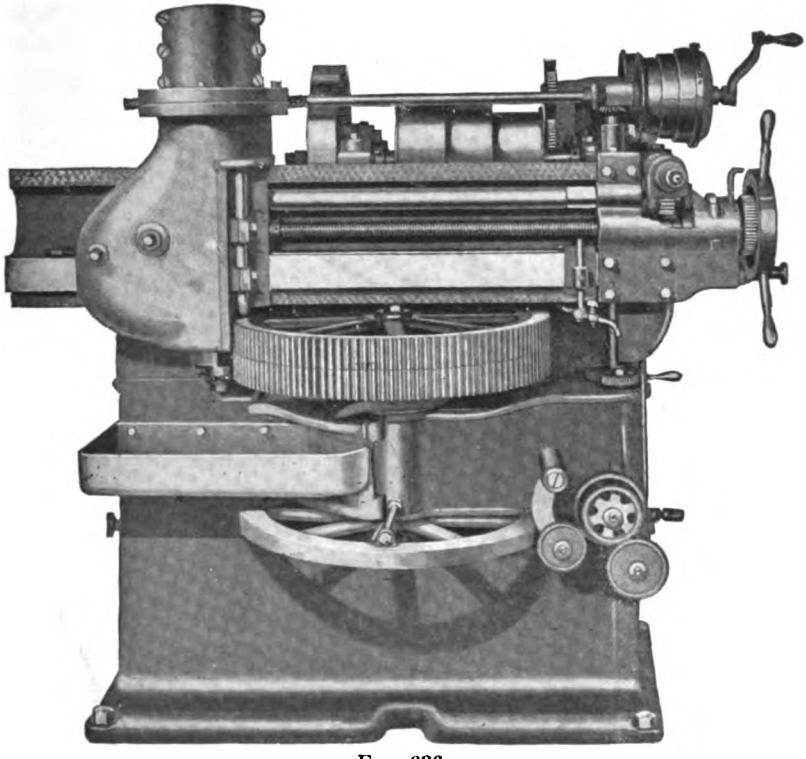

FIG. 636.

of the gear, the latter will generate on the blank, teeth of theoretically correct shape. This is the principle upon which gear-teeth are generated in the above-mentioned machine. The actual operation, however, is different in that, in addition to the revolving motion of gear and cutter, the latter is given also a reciprocating motion like that of the slotting-machine ram. The principle of the machine may be further explained by the consideration of the method of making the cutters.

In Fig. 637 will be seen an emery-wheel having one straight face at right angles to the wheel axis. The means for dressing the side of the emery-wheel is such as to insure a high degree of accuracy. In con-

nection with the emery-wheel is shown also a small gear. This gear is in reality a steel cutter which has been roughed out to the approximate shape and hardened. The diagram is designed to show a method of presenting the cutter to the revolving emery-wheel in a manner to grind the teeth of the cutter to the exact shape. The sides of a theoretical involute rack-tooth are straight, the angle of each side being

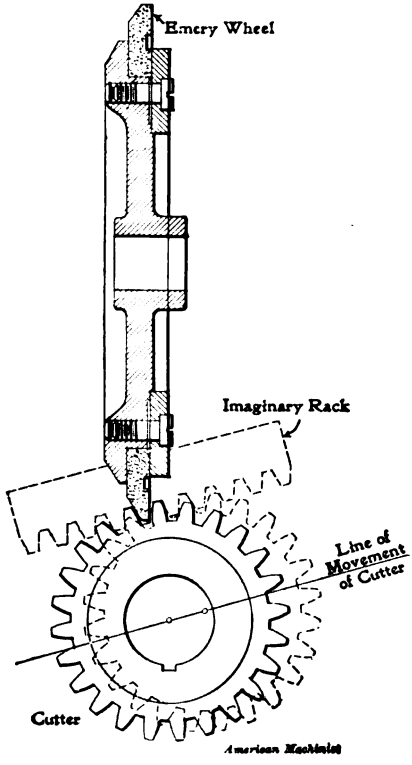

FIG. 637.

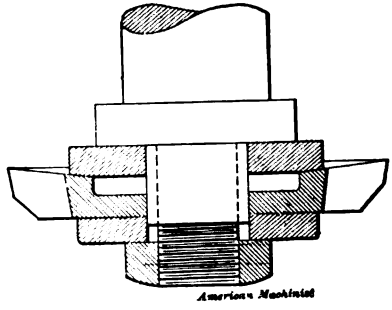

FIG 638.

$75^1/_2°$ with the pitch-line. The straight face of the emery-wheel, being placed at the required angle with the path of the cutter, is intended to represent one side of such a rack-tooth.

The cutter is rolled past the revolving emery-wheel at the required angle in true rack and pinion motion, and for each passage of the cutter one side of one tooth is formed. This is repeated for each tooth, when the cutter is reversed and the same process is followed for the opposite

side. Fig. 638 shows one of the cutters and one of the methods for holding it. It will be seen that the cutter has the proper clearance.

In Fig. 639 is shown a cutter in connection with a partially developed gear. This figure illustrates the method of starting the cut. The

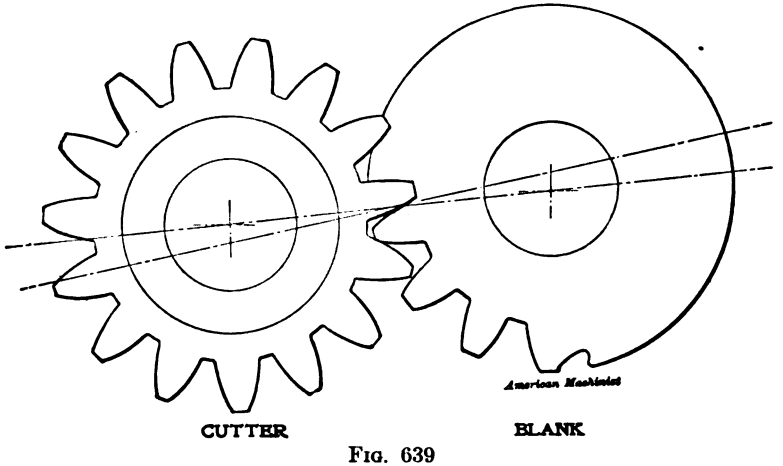

FIG. 639

machine being set in motion, the cutter is gradually fed to the full depth in the blank, when both blank and cutter begin to revolve just as though they were two gears. The reciprocating motion is, of course, maintained during the rotary motion, the result being that in one revolution the blank becomes a finished gear. To prevent the rubbing and wearing action of the cutter on the gear-teeth, during the return-stroke the cutter is moved outward slightly. By a similar mechanism it is brought back to its cutting position at the beginning of the downward stroke. The names of the various parts of the machine are given in connection with Fig. 640.

It is important to observe that in this system of gear-cutting only one cutter is needed for each pitch. This cutter cuts both external and internal gears. Fig. 641 shows the two gears in one casting and the cutter in position for cutting an internal gear. The dotted lines on the opposite side show the cutter in correct position for shaping the tooth of an external gear.

The Gleason Gear-planer.—As has been stated, the method of cutting bevel-gears in a miller is not satisfactory for gear-teeth having extra long faces. The longer the face the greater is the variation from the theoretical shape.

If we stretch a fine thread along the side of a bevel-gear tooth from the apex of the pitch-cone to the outer curved edge of the tooth, the thread will follow the side of the tooth throughout the length of the latter. If the outer end of the thread be moved to another position,

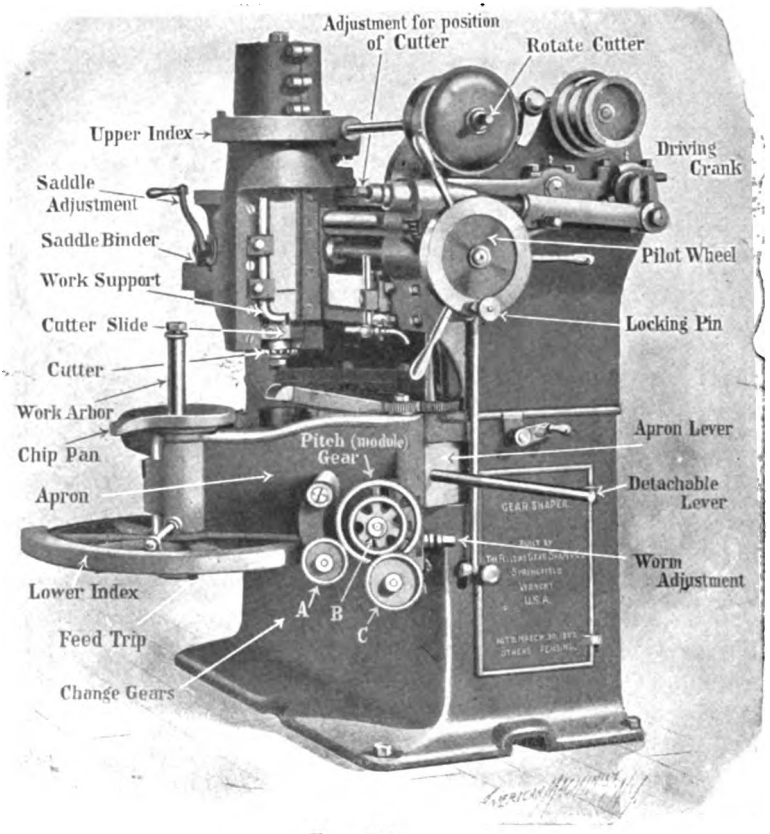

FIG. 640.

the inner end being held as before, the thread will still remain in contact with the side of the tooth. The principle of a bevel-gear tooth, as distinguished from the spur-gear tooth, may, therefore, be represented by an infinite number of straight lines extending from the outer curved outlines of the tooth to the apex of the pitch-cone.

The Gleason bevel-gear machine is simply a system of mechanism designed to give practical effect to this principle in planing gear-teeth. Figs 642 and 643 show respectively perspective and outline views of

the Gleason machines. The construction of Fig. 643 is slightly different from that of the machine in the perspective view, but it nevertheless helps to explain the principle of the latter. The formers, which are the main elements to give effect to the above principle, are clearly

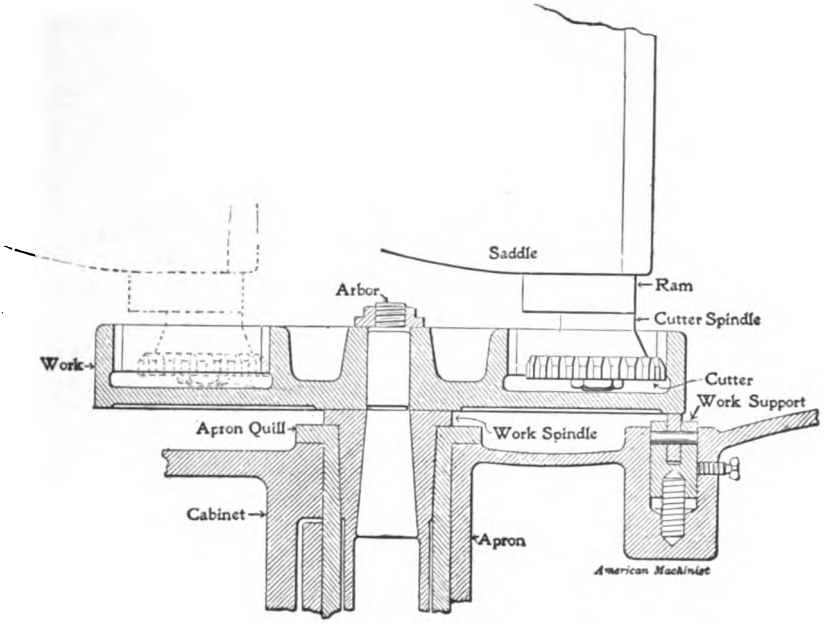

FIG. 641.

shown on the front of the machine in the perspective view. As seen in Fig. 643, the gear is held on the head-spindle at *G*, and before the cutting is begun the head must be moved to bring the apex of the gear to the center of the machine. To facilitate this work a gage for the purpose is furnished with each machine. In this machine a single-point tool is caused to reciprocate in very much the same way as a shaper-tool, the guide for the tool being pivoted at its inner end in a universal joint, and caused to follow the curved former at its outer end. The manufacturers of this machine explain the movements of the cutting-tool as follows: "The arm on which the tool-holder travels is rotated around the center of the machine in a horizontal plane. Besides this horizontal movement of the arm, it is hinged at the center of the machine so as to give a vertical movement as it is fed over the former, so that the tool travels always at the correct angle of the gear from

the top of the tooth to the root, and the tooth, therefore, has the perfect reducing cut, the small end being in proportion to the large end."

The tooth-curve of the former is produced by a machine designed especially for this purpose, and there is practically no wear on the former because it is used in connection with a roller.

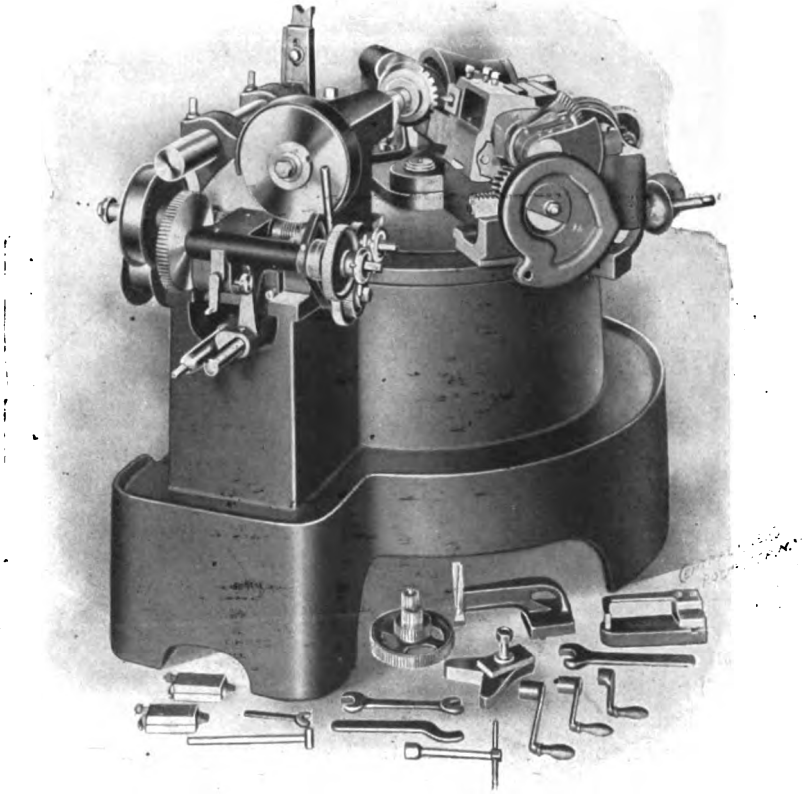

FIG. 642.

During the time that the tool is cutting the gear is stationary, the same as in a milling-machine. The first operation is to cut a central groove for each tooth. This is accomplished by the roughing or "stocking" cutter shown in Fig. 644. During the second operation the upper-cut tool shown in Fig. 645 planes one side of each tooth. This tool is removed and the under-cut tool of Fig. 646 is used to finish the opposite side of each tooth. Thus it requires three tools and three revo-

lutions of the blank to complete the gear. The gear is indexed for each tooth after the completion of the work of each tool upon the tooth.

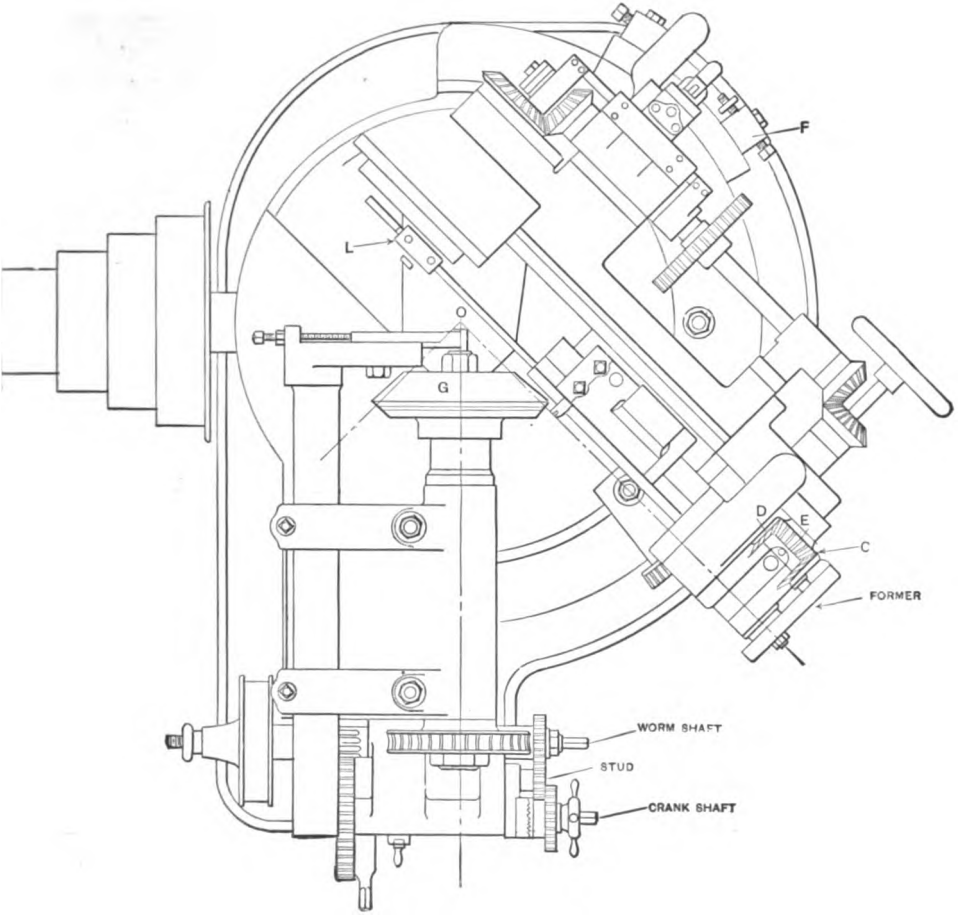

FIG. 643.

The slide which carries the tool-holder is driven from the cone through triple gears, and has a Whitworth quick-return. The feed is worm-driven and positive. These machines are made for bevel-gears only, and with each machine a number of formers sufficient for all the gears within the capacity of the machine is furnished. The same company makes also *spur*-gear planers.

One of the latest and most important gear-machines on the market is the automatic bevel-gear-generating machine made by the Brown and Sharpe Manufacturing Company. The Gleason planer finishes both sides of a tooth at once; the Brown and Sharpe machine finishes both sides of a space in one operation. This excellent machine is fully described and illustrated in an article in the "American Machinist" of January 29, 1903. One of the closing paragraphs of that article refers to the machine as "the latest masterpiece of Mr. Oscar J. Beale."

In referring to a few of the leading gear-cutting machines the Bilgram bevel-gear planer should not be omitted. This machine cuts bevel-gears having either long or short faces theoretically correct, as do also the other two bevel-gear machines mentioned.

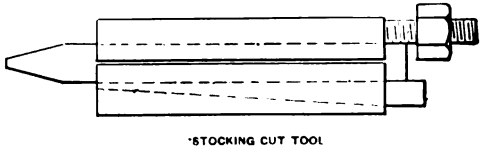

FIG. 644.

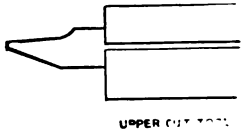

FIG. 645.

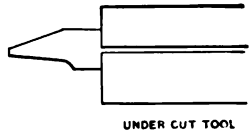

FIG. 646.

The use of bevel-gears on bicycles stimulated the design of special machines for cutting the gears. Most of these machines have a narrow range, being designed for small gears only.

CHAPTER XXVIII

GRINDING MACHINES AND METHODS

Natural and Artificial Abrasives.—The old familiar grindstone, though still used by the village blacksmith, is rarely seen in the *modern* machine-shop. The emery-wheel is not only more efficient, but it has a much wider application. Emery, which is an impure form of corundum, is one of the oldest of the commercial abrasives. This material has been so generally used for grinding-wheels, that wheels made of any of the later abrasives are popularly called emery-wheels. Corundum is an oxide of aluminum. It is sharper and more durable than emery, but formerly the price of *pure* corundum was so high as to almost prohibit its use for grinding-wheels. However, the recent discovery of large deposits has placed the article upon a commercial basis. Within the past fifteen years various experiments have been made with the object of manufacturing abrasives in connection with the *electric furnace*. Among the abrasives thus produced, carborundum, alundum, and carbondite are represented as being superior for most purposes to emery and corundum.

Methods of Designating Abrasives. Bond.—The various abrasives are designated with respect to the *size of the grain* by numbers, the coarser grain taking the lower numbers.* The *grade* of a wheel is the measure of its resistance to crumbling while revolving in contact with the work. A wheel of which the particles are easily broken down or separated is said to be *soft*, while one which does not easily yield is said to be *hard*. There is no standard system of grading. The Norton Company uses the alphabetical method. Thus, A is the softest and Z the hardest wheel, while M is their medium grade. The carborundum company also uses the letter method, but reverses the order, taking A for the hardest wheel. Some other manufacturers designate both *grain and grade* by numbers.

In making a grinding-wheel the abrasive material is mixed with some kind of *cementing* material which holds the wheel in form. The cementing material is called the *bond*.

* Two or more numbers mixed together give a "combination."

Classification of Grinding.—The kind of grinding in which a revolving wheel is used may be divided into two general classes, viz., hand-grinding and machine-grinding. In hand-grinding the wheel only is operated by power, the work being presented to the revolving wheel by hand. In machine grinding, with which this chapter is principally concerned, both the work and the emery-wheel are controlled by power mechanism.

Grinders for Lathe- and Planer-tools.—A good example of the modern wet emery-grinder for general tool-grinding is shown in Fig. 647. The

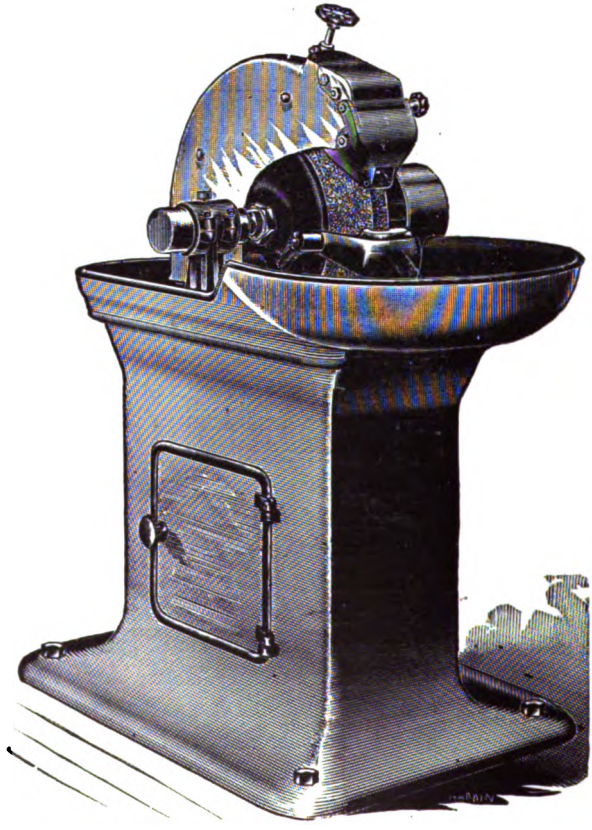

FIG. 647.

water-supply in this machine is regulated by a hand-wheel, one or two turns of which start or stop the supply. It is well distributed over the grinding surface and a guard is furnished which protects the sur-

rounding machinery from the spray of water when the machine is not in use. Mounted within convenient reach above the rest is the truing-roll, which can be applied by a few turns of a knob. To get the best results the wheel should be kept true, and to avoid danger from the tool catching between the emery-wheel and rest, the latter should be moved up to the wheel as often as the wheel wears an appreciable amount. It should be kept so close as to *barely clear the wheel.*

The novice should be informed that the water serves an important purpose, and that unless freely used it would be necessary to spend considerable time in the forge-shop *retempering the tools.*

In grinding tools in connection with the above-mentioned machine, the tool is held in the hand and ground according to the judgment and

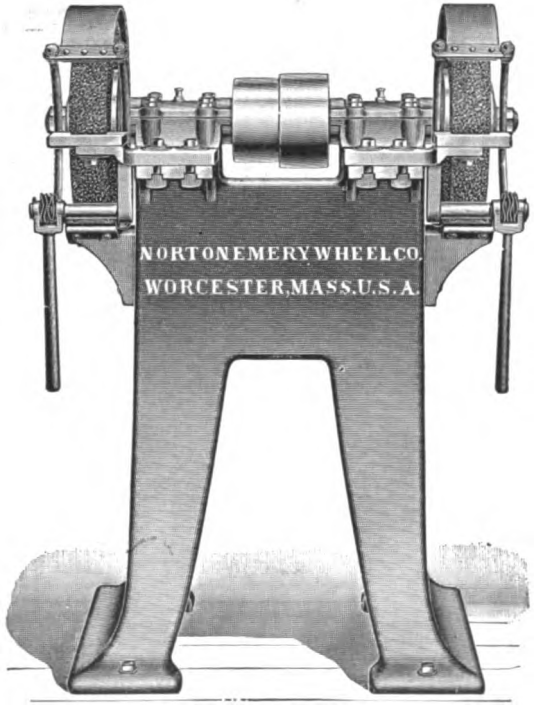

FIG. 648.

skill of the workman. However, there are on the market machines in which the tool is held by a kind of tool-post and fed to the wheel by a screw or other mechanical means. These machines are so constructed that any number of tools may be ground to the same angles, the tool-

swiveling devices being graduated, and a table giving the angles for the various tools being furnished with the machine.

Emery-, corundum-, and carborundum-wheels mounted on simple frames are very extensively used for grinding rough castings and forgings in various lines of manufacturing. Fig. 648 shows a machine of this character. These machines are made in all sizes to suit a variety of purposes. A small machine of this same general design is some-

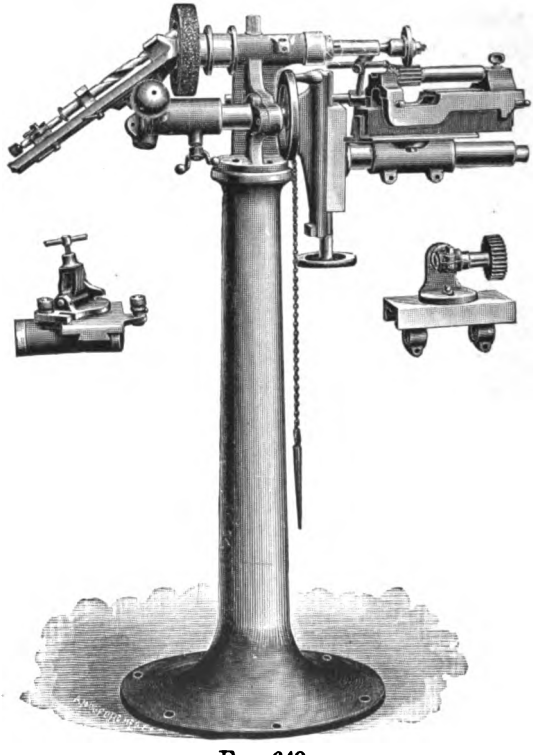

FIG. 649.

times used for grinding lathe- and planer-tools. When these machines have no water-supply, it requires some care to avoid burning the point of the tool. Most mechanics keep a small pail of water near the grinder and dip the tool in the water every few seconds.

The grinding of reamers, milling-cutters, etc., requires different manipulations from that of ordinary tool-grinding. Fig. 649 shows a machine adapted to the former class of work. There are special machines designed for grinding twist-drills exclusively, but the illustration shows

that twist-drills are included in the list of tools that may be ground on this machine. For this purpose and for some other purposes, attachments to the machine proper are furnished. A twist-drill is shown in the fixture at the left in position for being ground. The device is provided with adjustment for grinding different diameters of drills and for giving the drills different degrees of clearance.

On the right of the machine is seen a reamer held between centers in position for grinding, a small emery-wheel being shown just above the reamer. To grind a reamer like that of the illustration, the reamer

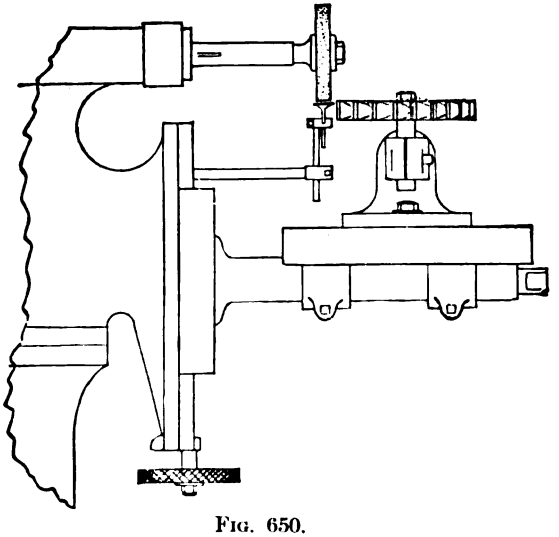

FIG. 650.

is first adjusted in correct relation with the wheel to give the required clearance. The finger-guide seen just under the spindle is next placed in contact with the front of one cutting-edge, and the reamer, while being moved along under the wheel, is held against the guide. Having ground the clearance on one of the cutting-edges, the reamer by means of the slide is moved beyond the guide and rotated to bring the next cutting-edge in proper relation with the wheel and guide and so ground, this being repeated until the work is complete. The methods of grinding taper-reamers, milling-cutters, etc., are indicated in Figs. 650 to 652.

The Universal Grinder.—Fig. 653 shows a perspective view of the No. 1 B. & S. Universal grinder, and Figs. 654 and 655 show sectional views of the spindle-boxes and head-stock respectively. Plain grinders, which are used for heavier work, differ from the universal grinder in

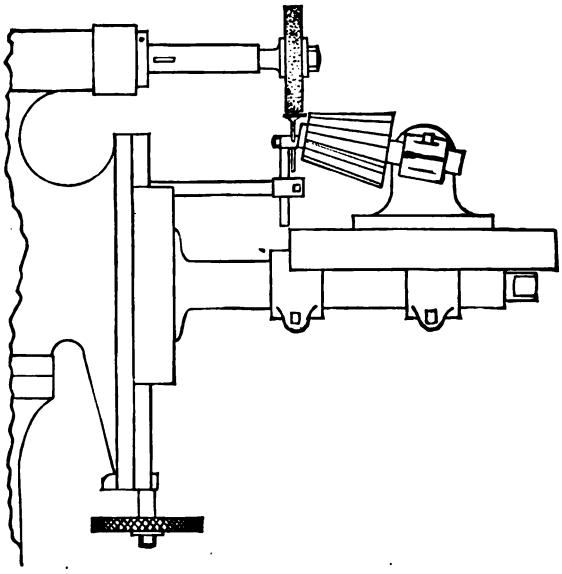

FIG. 651.

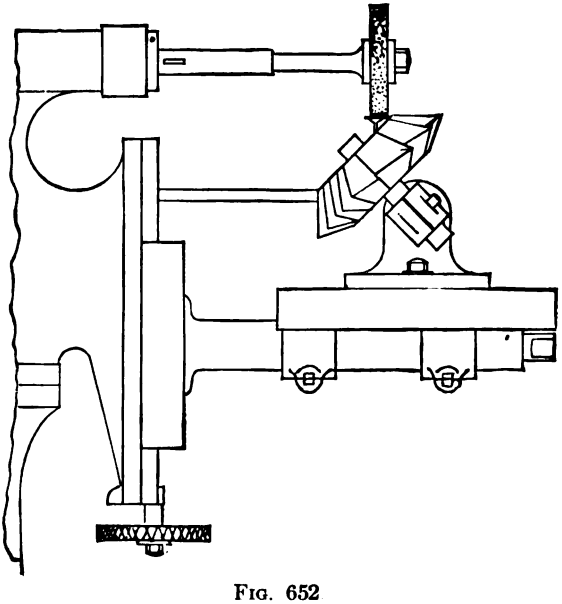

FIG. 652

being heavier and in having fewer adjustments and attachments. Fig. 656 shows a Landis plain grinder and some of its accessories. The universal grinder is designed for quite a different purpose from that of the common tool-grinder. The former is used for grinding cylin-

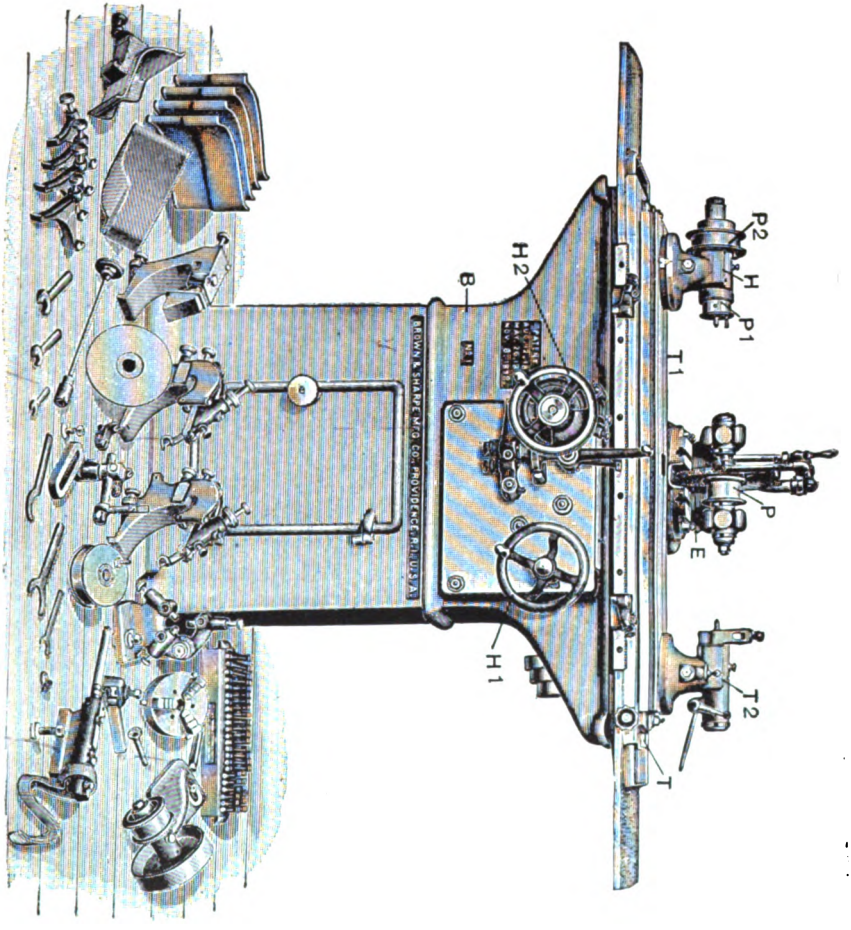

Fig. 653.

drical surfaces more accurately than it is possible to turn them in a lathe. A shaft-journal, which is required to run, say 4000 R.P.M., if turned in the lathe in the ordinary manner, would, because of the minute imperfections in the lathe work, be likely to heat. If finished in the grinder it would run without heating.

Referring to Fig. 653, B is the bed, T the sliding table, T 1 the swivel table, H the head-stock, T 2 the tail-stock, E the emery-wheel, P the pulley which drives the emery-wheel, and P 1 and P 2 the pulleys which drive the work. The work is either held between the centers in

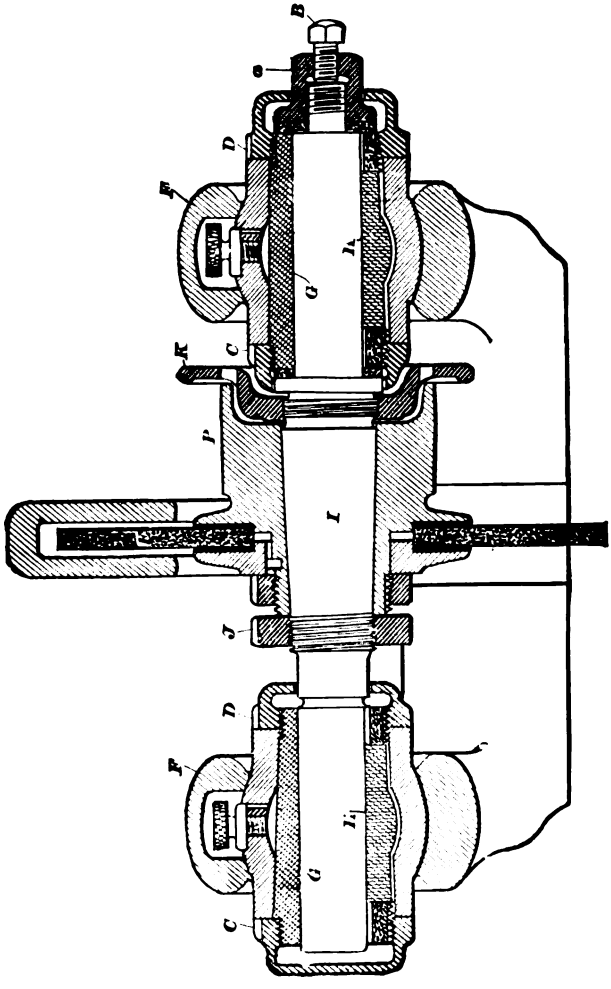

Fig. 654.

head-stock and tail-stock and driven by a dog, or it is carried by a chuck. Generally when the work is driven by a dog the head-stock spindle does not revolve, but the pulley P 1, which turns freely on the spindle, drives the work by contact of the dog with the pins

projecting from the pulley. As in this arrangement neither of the centers revolves, errors due to an eccentrically revolving head-center are impossible. When the work is carried in a chuck, pulley $P\,1$ is taken off and the chuck screwed on instead. In this case the spindle is driven by pulley $P\,2$, which is tight on the spindle.

The emery-wheel E is fed to the work by means of the hand-wheel $H\,2$. At the back of this hand-wheel is a graduated ratchet-disk by which the depth of cut is measured. The machine is provided with power cross-feed which may be adjusted to grind to .00025″, and the feed is automatically stopped when the work is ground to the required size.

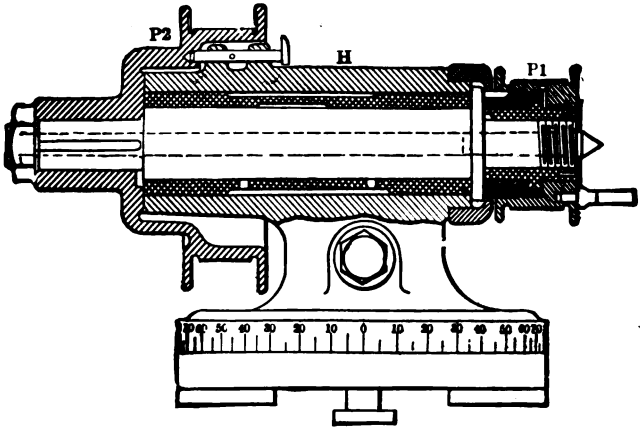

FIG. 655.

The table is moved by hand by hand-wheel $H\,1$, and by turning a knob the automatic mechanism, by which the table is fed, is set in motion. The table may be swiveled on a central stud $3^1/_2°$ each side of zero. The object of thus swiveling the table is to provide for grinding slight tapers. For grinding abrupt tapers and certain kinds of disk work the head-stock may be swiveled to any required angle.

Work Done on Grinders.—As a rule the universal grinder is not used for heavy cutting, but to correct small imperfections; therefore the work done on this machine is generally made nearly right, as to dimensions, in the lathe or other machine. In addition to such work as machine-shafts, etc., the universal grinder is also used for grinding lathe-arbors, reamers, and various angular and tapering shapes.

Formerly, grinding machine-shafts, etc., was considered a very expensive process, and it was dispensed with except in special cases. Recently,

however, grinding-machines and processes have been studied and developed to such an extent that grinding is coming into use, *as a matter of economy*, on a great deal of work where the refinements of the

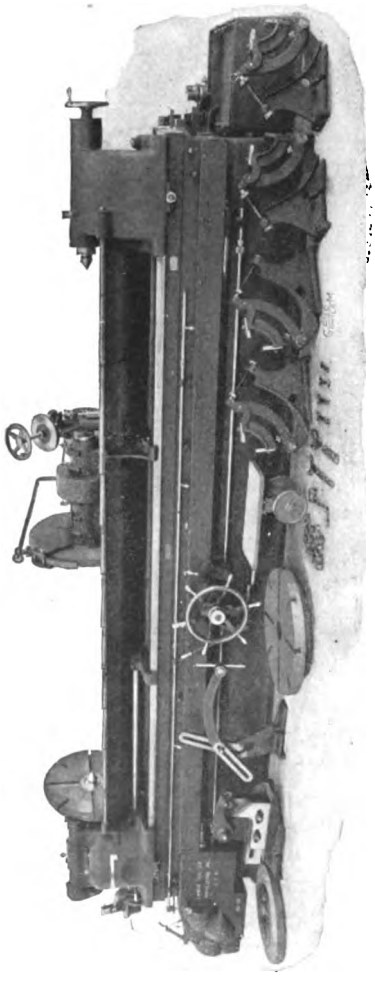

Fig. 656.

process are not strictly necessary. A specialist in grinding can make the finishing cuts on all kinds of cylindrical work at less cost than is possible with ordinary lathe processes. In some classes of work the lathe is dispensed with, and both roughing and finishing cuts are made in the grinder. This is especially true of the *plain* grinder.

In most kinds of work it is *necessary to keep water running* on the wheel when grinding, and for this purpose a pump attached to the rear of the machine automatically supplies the water.

Grinding Parallel Shafts.—About the simplest operation on the grinder is that of grinding a plain shaft parallel in diameter. In performing this work the shaft is placed between the centers with a dog on the head-stock end, the swivel-table is set to zero, and with the machine in motion the emery-wheel is fed up against the work by hand. For traversing the table the automatic longitudinal feed is, of course, used. If the grinding is to approach very close to the dog or to the foot-stock spindle it will be necessary to use care in adjusting the tap-

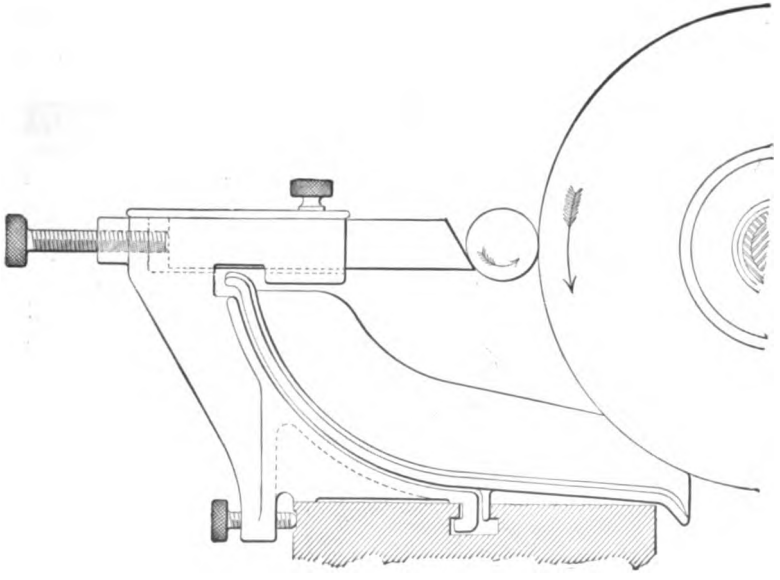

FIG. 657.

pets which regulate the traverse of the table. If, for instance, the tappet next to the head-stock end be moved too far to the left, the emery-wheel may strike the dog, causing the wheel to burst. It is safer to first adjust the tappets for a too short traverse and make the correction after noting how far the table falls short of the required stroke. It is important also in this and other grinding operations that the *hood* which covers the emery-wheel be used.

In most grinding-machines, if not all, it is difficult to adjust the table at the first setting to grind a shaft parallel. Having adjusted

the table as nearly as may be by the graduations at the end, the cut-and-try method must be used for making the final corrections.

In some classes of work, in which it is necessary to grind close to a shoulder, it is permissible to turn a groove about $1/4''$ wide next to the shoulder. This obviates the necessity of having the emery-wheel

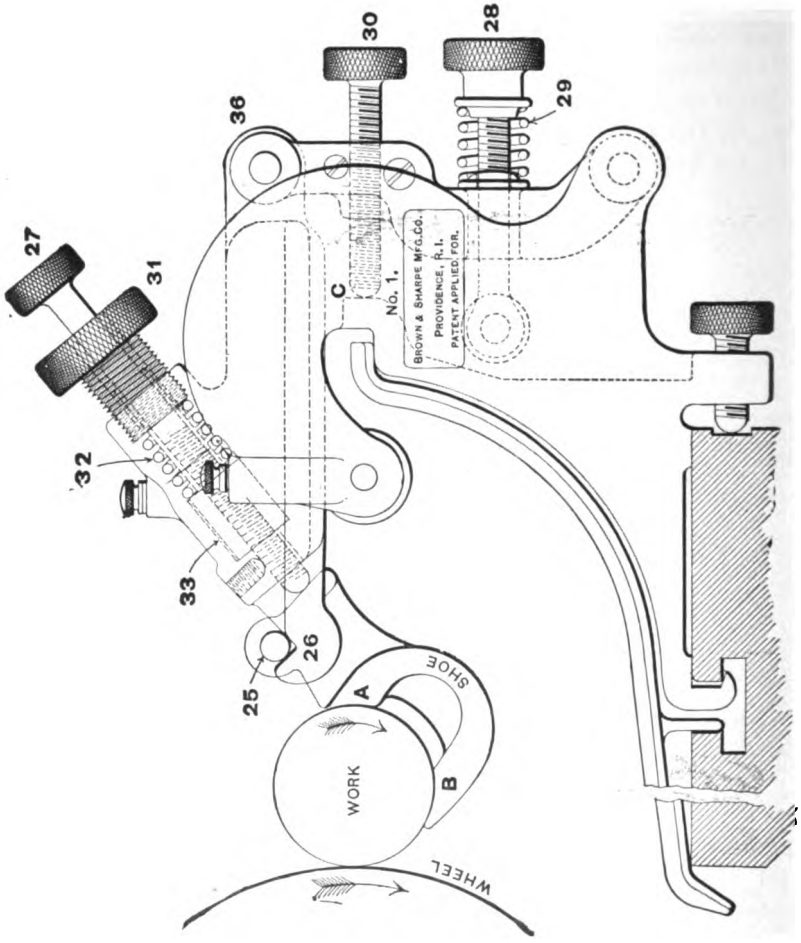

FIG. 658.

touch the shoulder. The diameter at the bottom of the groove need not be more than about .001″ less than the diameter of the shaft. If it is necessary to grind to a sharp corner under the shoulder without the preliminary grooving, it will be advantageous to begin grinding at the shoulder and feed the other way. By this method the advancing corner

of the wheel will do the most of the work, and the wear of the wheel will leave the opposite corner sharp for the next cut under the shoulder. This is the method followed at the works of The Brown and Sharpe Manufacturing Company.

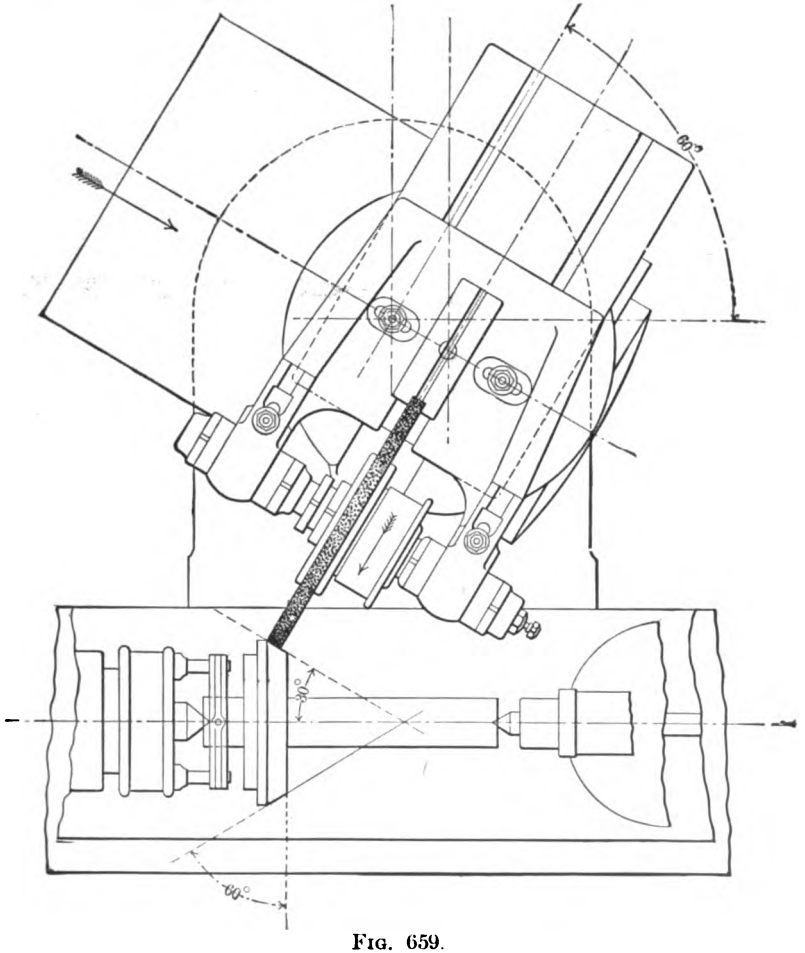

FIG. 659.

In grinding a long shaft the parallelism of the shaft is affected by the wear of the emery-wheel. To reduce this wear to a minimum, a wheel having a comparatively wide face should be used and the feed should be correspondingly faster. The machine grinds during both the forward and backward traverse of the table, and this in part compensates for the wear in the wheel.

Use of the Back-rest.—It has been shown elsewhere that in turning long slender work in the lathe it is necessary to use a steady rest, or back-rest, to support the work against the pressure of the cut. The back-rest shown in Fig. 657 is used for a similar purpose in the Universal grinder. The shoes or lugs which support the work may be made of some soft metal or hard wood. Fig. 658 shows the *Universal* back-rest. This rest admits of more delicate adjustment and is better for some kinds of work, especially shafts having keyways. Work in which the diameter is very small in proportion to the length requires the use of several rests. One rest for a length of about every eight diameters should be sufficient.

Grinding Tapers.—As has been indicated the upper part of the table swivels on a central stud and is graduated at the end. This provision enables the table to be adjusted for grinding slight tapers. In other

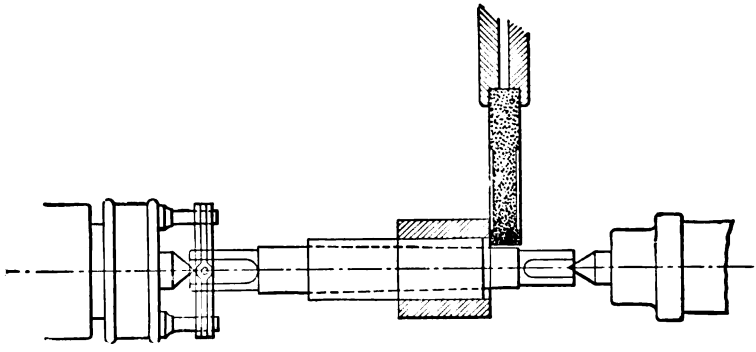

Fig. 660.

respects the grinding of these tapers does not differ from grinding parallel work. It may be observed, however, that this method, which does not disturb the fit of the centers, is much superior to the method of turning tapers in the lathe by setting over the tail-stock. It is even more reliable than the compound-rest method.

The table will not swivel sufficiently for abrupt tapers like that shown in Fig. 659. For such work the table is set to zero and the wheel-bed adjusted to the required angle and fed by the cross-feed mechanism. As will be seen in the illustration the wheel is swiveled to give it a *full bearing on the work.*

In some cases a slight taper and an abrupt taper are required on the same piece of work. In such a case the slight taper is ground by swiveling and feeding the table as previously described, the abrupt taper being ground as in Fig. 659, excepting that the wheel is adjusted in

proper relation for the slight taper and its corner beveled off to give it a sufficient bearing on the abrupt taper.

Grinding the Ends of Bushings and Collars.—In Fig. 660 is shown one method of grinding bushings and collars. For this purpose the wheel

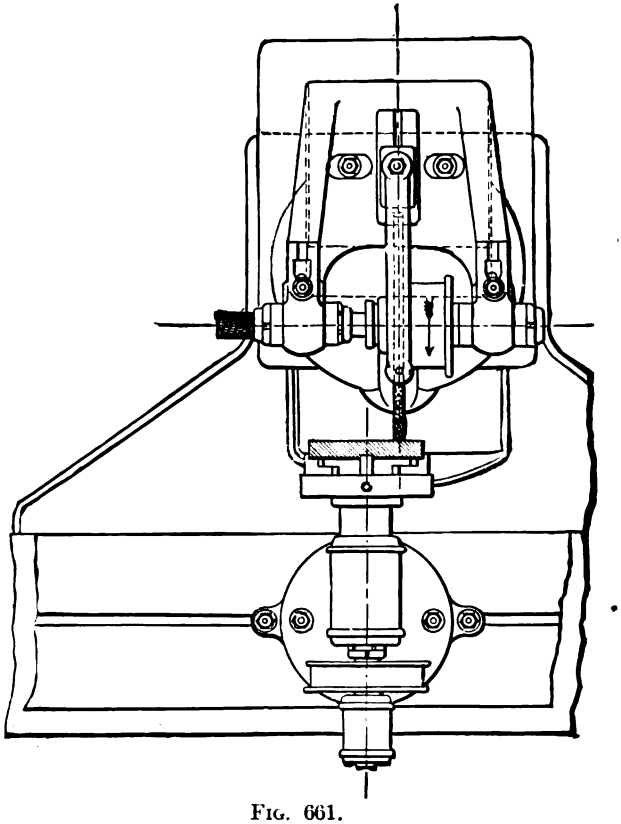

FIG. 661.

should be so shaped as to leave a narrow bearing on the side and the bushing should overhang a shoulder on the arbor. This is necessary in order that the wheel may have sufficient crosswise movement without touching the arbor. It will be understood that the cross-feed is used on such work.

Disk-grinding.—Work the diameter of which is much greater than the length may be very conveniently ground by swiveling the head-stock 90° and using the longitudinal feed of the table. Fig. 661 shows this method. By varying the angle of the head-stock from 90° the face of the work may be made either convex or concave. In connection with the swiveling head-stock and chuck it should be easy without any illustra-

tion to conceive of a method of grinding two surfaces at an angle to each other. Thus the face of the work might be ground by feeding the table lengthwise and its corner ground to an angle with the face. In grinding the corner the cross-feed should be used. As indicated in a some-

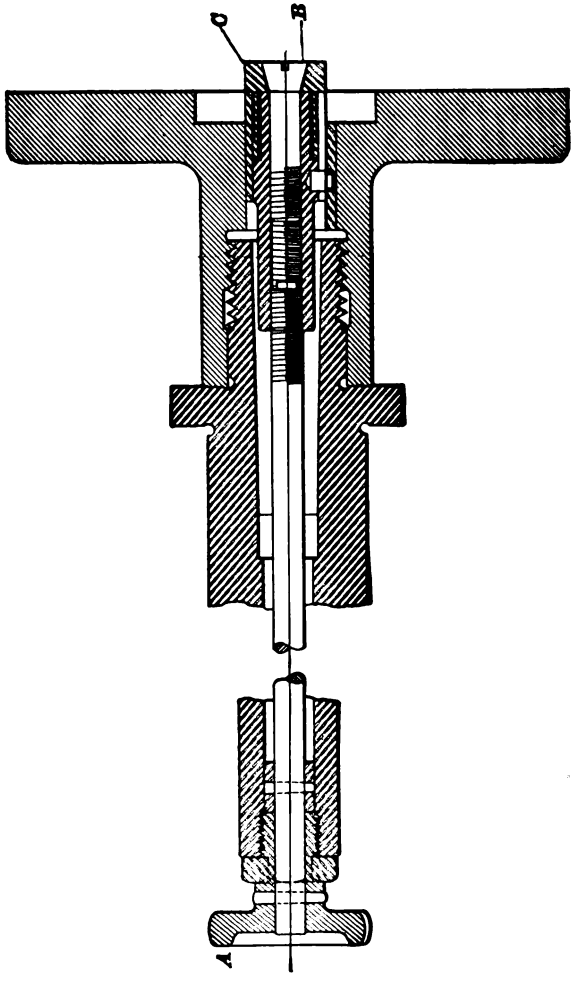

Fig. 662.

what similar case, one corner of the wheel should be beveled off to increase its bearing on the angular surface.

Special Draw-in Chuck.—The chuck shown in Fig. 662 is very convenient for thin disk work which is required to be held quite true with its bore. Such work is placed upon the split bushing at *C*, which bush

ing is expanded by the screw B, and the work is drawn up firmly against the face-plate by the knob A. Different sizes of bushings may be used for different bores. The method of grinding the work is the same as in Fig. 661.

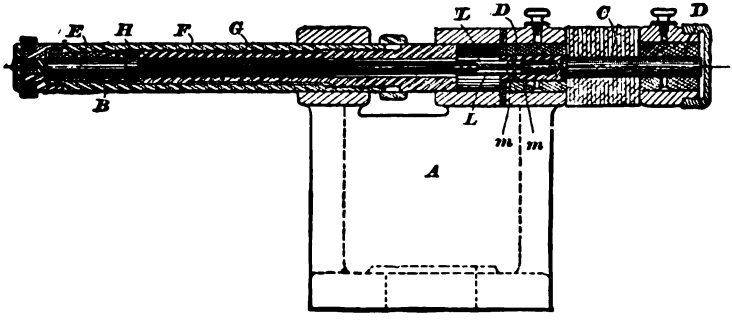

FIG. 663

Internal Grinding.—Fig. 663 shows the internal grinding fixture and Figs. 664 and 665 show two classes of internal grinding. As will be

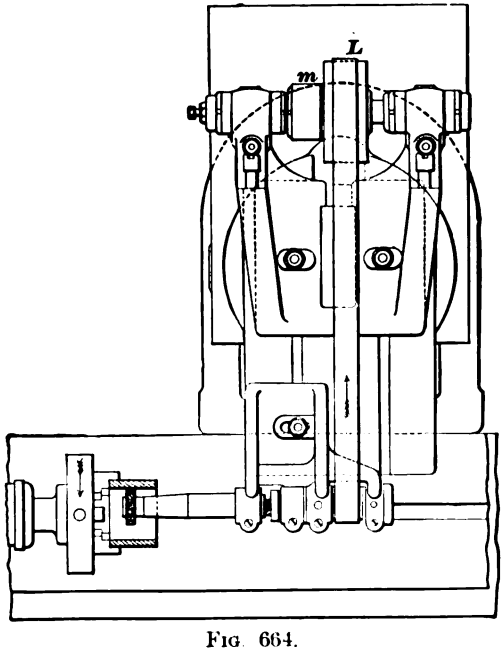

FIG. 664.

seen the fixture is bolted to the wheel platen and driven by a light belt from the pulley L. The spindle which carries the pulley L is driven

from the overhead counter-shaft by a belt running on the pulley *m*. In parallel work the swivel-table is placed at zero and is fed in the same manner as for external parallel work. A method of grinding slight and abrupt tapers is clearly indicated in Fig. 665. The table is swiveled and its longitudinal feed operated for the slight taper. In grinding the abrupt taper the cross-feed is used. In adjusting the wheel-slide for this taper the angle of the table must be taken into account.

Surface-grinding Machines.—Surface-grinding machines are used for grinding plane surfaces. Like the grinders for cylindrical work, these

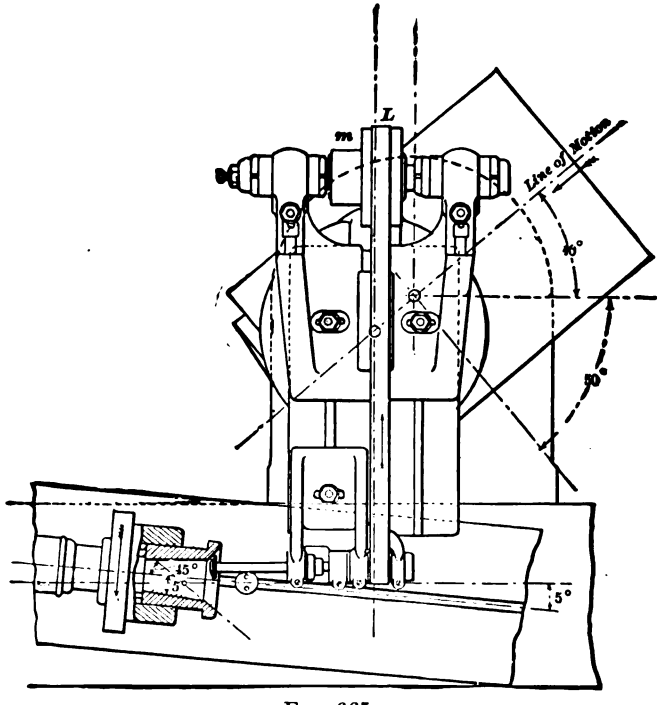

FIG. 665.

machines are designed for both roughing and finishing cuts, and to grind hardened steel which cannot be machined with ordinary tools. Fig. 666 shows a surface-grinding machine constructed very much like a metal planer. The wheel is driven from the drum seen behind the housing, which drum in turn is driven from an overhead counter-shaft. This counter-shaft is seen near the machine. The travel of the table is automatic and its stroke is regulated by adjustable dogs. The cross-rail is adjustable on the housing castings, the front faces of which are made

circular to avoid disturbing the tension of the belt. The cross-head carrying the emery wheel is fed horizontally on the cross-rail at the end of the stroke in very much the same manner as a planer-tool is fed.

Great care is required in clamping work to the grinder-table to

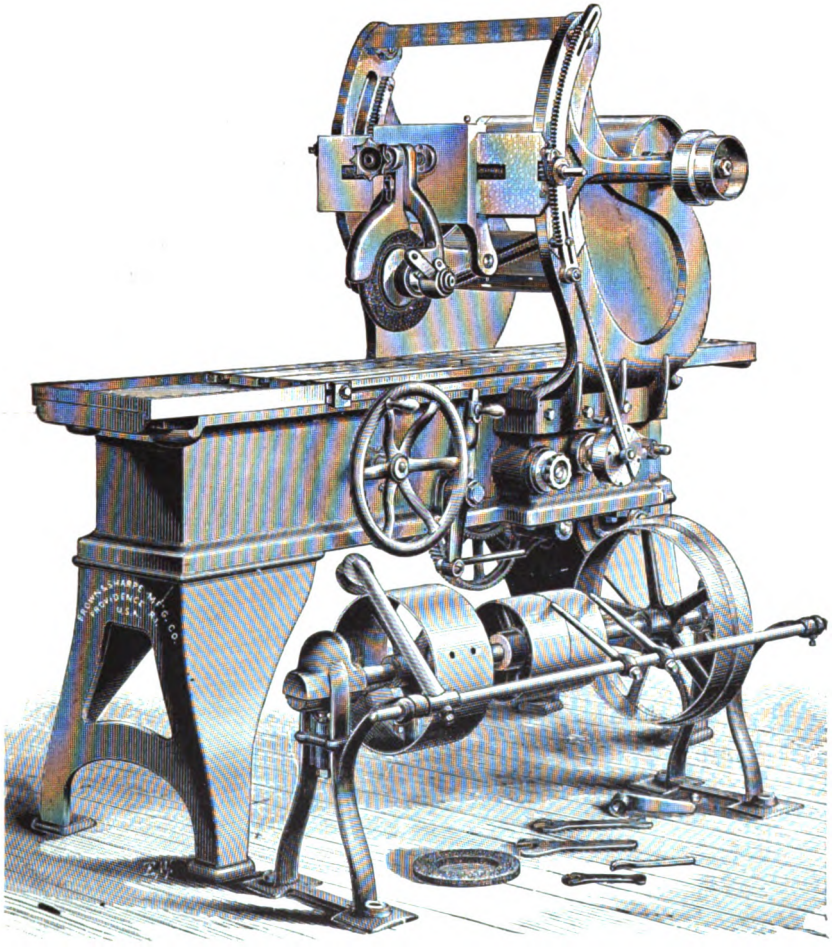

FIG. 666.

avoid springing it. The refinements possible in the grinding process are easily neutralized by errors in clamping. The Walker magnetic chucks, which are used to some extent in lathe-work, planer-work, etc., are of special advantage in connection with the surface grinder.

Combined Drill and Surface Grinder.—Fig. 667 shows a combined surface and drill grinder. It has an advantage over some combination tools in that both operations may be performed simultaneously. "A peculiarity of the drill holder is that it does not require adjustment for different diameters of drills, while the adjustment for length is made in the usual manner." The table for surface grinding has a vertical

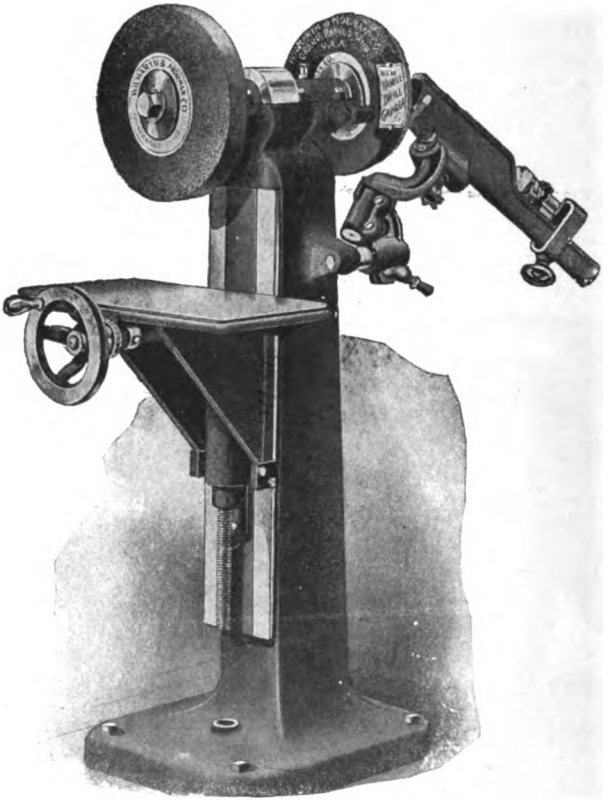

FIG. 667.

adjustment, and in connection with this adjustment a graduated dial reading to thousandths of an inch is provided. The work is not clamped to the table, but is fed along on the table by hand.

Floor Grinders with Surface Attachment.—The grinding-machine shown in Fig. 668 has an emery-wheel at the right end of the spindle which may be used for miscellaneous grinding. Mounted above the wheel at the left is a surface-grinding table. This table is adjustable

vertically to compensate for the wear of the wheel and also for adjusting the depth of the cut. The work is moved over the revolving wheel by hand as in Fig. 667. The grooves seen in the table are designed to catch the particles of emery and grit from the castings being ground. This machine while very convenient for general grinding is not adapted to the high grade of work for which the machine in Fig. 666 is designed.

Emery-wheel Dressers.—In connection with Fig. 647 we allude to a *truing-roll* used for truing the wheel of that machine. The roll is

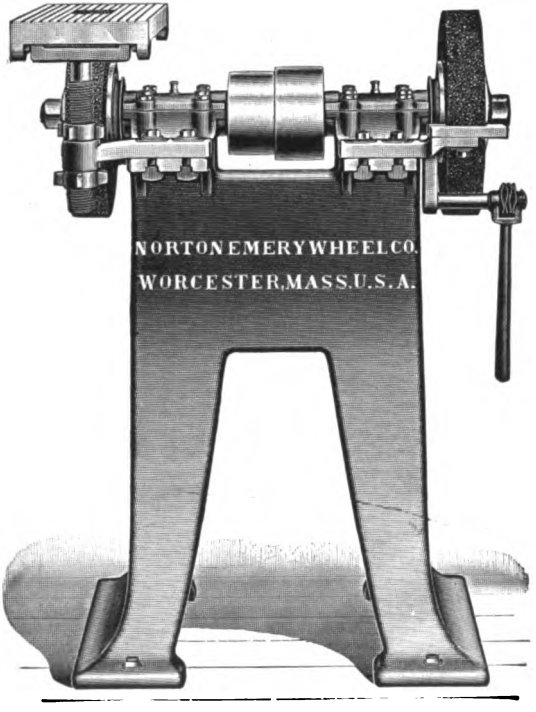

FIG. 668.

simply a cylinder having small journals at each end and having deep grooves in the cylinder, giving the latter the appearance of a series of thin disks separated by small washers. The roll is caused to revolve by being brought into contact with the revolving emery-wheel by screw pressure. Increasing this pressure causes the roll to crush and break down the particles of emery. As the roll touches the high parts of the emery-wheel first and hardest the effect is to "true up" the wheel, or make its periphery concentric with the axis of rotation.

Shown near the right-hand wheel in Fig. 668 is another form of emery-wheel dresser. In using this device the pressure is applied by the lever, the effect being to break down the high spots in the emery-wheel the same as in the case of the truing-roll.

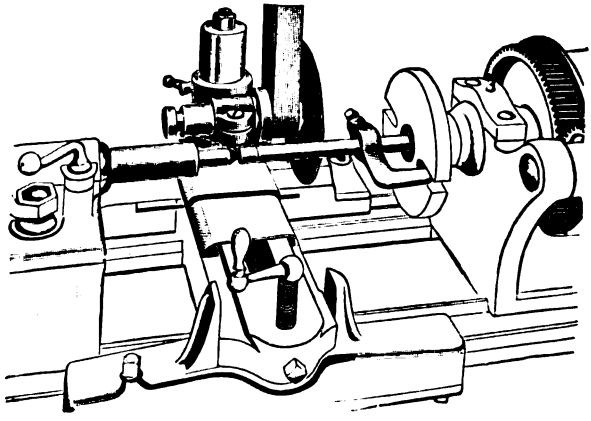

FIG. 669.

For dressing the emery-wheels used on the universal grinders, plain grinders, small center grinder, etc., a cheap black diamond

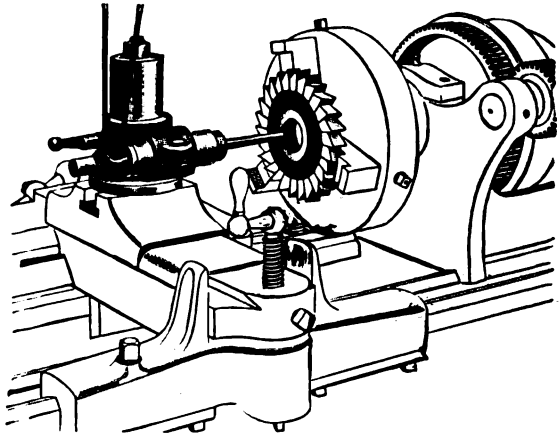

FIG. 670.

held in the end of a metal holder is used. One form of this holder has a handle on the outer end and is applied to the revolving emery-wheel in about the same way that a hand-tool is used. Holders are made

also of such shape as to admit of being held in a kind of tool-post provided for this purpose.

Grinding Attachment for the Lathe.—A first-class machine for cylindrical grinding is a costly tool. Many small machine-shops which could not afford a regular machine would find the attachment illustrated in Figs. 669 and 670 very useful. This attachment is held upon the tool-rest in place of the tool-post and is driven from an overhead drum

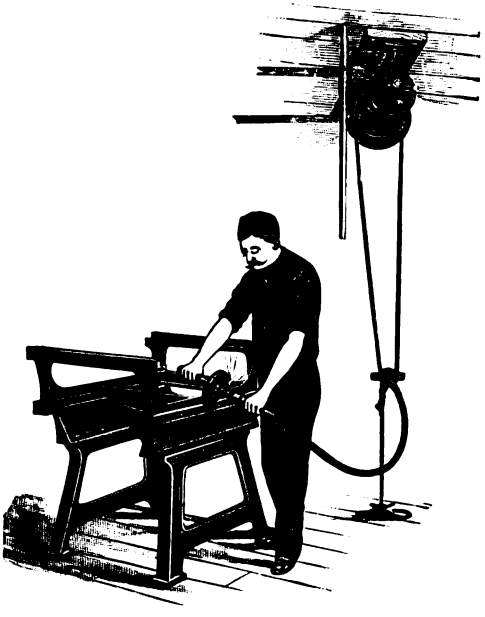

FIG. 671.

counter-shaft which is furnished with the attachment. In the first illustration it is shown grinding an arbor. For internal grinding the spindle is removed and another spindle is used instead, as shown in Fig. 670.

Portable Emery-grinder.—Fig. 671 shows a portable emery-grinder and the method of applying it in polishing and grinding framework, etc. By using suitable wheels, it may be employed for grinding heavy castings, for cleaning, polishing, buffing, etc. It is driven by a counter-shaft, rope, and flexible shaft as shown.

Mounting the Wheel.—It is *absolutely necessary* to safety in operation that a wheel fit freely on the spindle, and that some kind of elastic washers be used between the flanges and the wheel. For the latter purpose rubber, pasteboard, or blotting-paper may be used.

Speed of Emery-wheels.—In general an emery-wheel should be run at the speed recommended by the manufacturers. For most purposes this speed will not be much greater than 5000 feet per minute. Experts in special lines of work sometimes run as fast as about 6500 feet per minute, but on account of the great danger of the wheel bursting, excessively high speeds are not to be encouraged. These general statem nts apply to wheels used for both hand and machine grinding, but in the latter class of work, to which the remainder of this chapter is devoted, *recessed wheels* and other shapes of *weak cross-section near the hole* are sometimes used. Obviously there is more danger in running these wheels at the higher speeds than there is in the case of the stronger wheels. A *frail wheel especially* is liable to crack by improper usage while being clamped on the spindle. All emery-wheels should be carefully inspected before the machine is started.

Recessed collars, so constructed as to fit over hubs on the wheels are used in some cases by the Safety Emery-wheel Company. These collars are used as an extra precaution against the danger from the bursting of the wheel.

Work Speed and Rate of Wheel Traverse.—It is difficult to give rules for the work speed and the traversing feed of emery-wheels as used in the universal and plain grinders. In the early days of cylindrical grinding, the work was rotated at a high speed,—in some cases as high as 400 to 500 per minute. The traversing feed was about $\frac{1}{100}$ to $\frac{3}{100}$ inch per revolution of work. With improvements in the emery-wheels and further experiments it was learned that better results could be obtained with slower work speeds and faster traversing feeds. At present very few mechanics run the work faster than 100 feet per minute. A feed of $\frac{1}{4}$ to $\frac{3}{4}$ inch per revolution of work in machines of ordinary size is perhaps in accordance with the conservative practice. Many who incline to the faster work speeds use *surface* speeds of from 60 to 100 feet per minute, with a feed of one half to three fourths the width of the wheel-face. But experts differ concerning work speeds and other particulars. It may be stated as a general rule that the *work* should revolve faster for finishing than for roughing cuts, and faster for cast iron than for steel. The average work speed used by those who advocate the *slowest speeds* and *fast traversing feeds* is about 20 feet per minute. In experiments described in the "American Machinist" of August 22, 1907, with a minimum *work* speed of 6 feet per minute the traversing *feed* was 2″ per revolution of work. The same experiments demonstrated that it is possible

to remove 5½ inches of cast iron per minute in cylindrical grinding. Other experiments have shown that 2½ inches of *steel* per minute may be removed.

Those mechanics who have been accustomed to the use of wheels beveled at the edge to give a bearing on the work of ⅛″ to ⅜″, with corresponding feeds, should study recent developments in grinding machines and processes. There are, of course, cases in which narrow-faced wheels are necessary, as for example shafts which must be ground to a shoulder; but ordinarily **wide-faced wheels and fast traversing feeds should be used.**

Importance of True Wheels.—It is necessary, especially in making *finishing cuts*, that the face of the wheel be *true* and *parallel with* the traverse of the carriage or *sliding table*. The diamond-tool referred to on page 488 is commonly used for "truing" the wheel, but when the latter is badly out of shape it may be "roughed down" with the ordinary *wheel-dresser*, shown in connection with Fig. 668, and then finished with the diamond. In most cases the diamond-tool should be *rigidly clamped* to the machine; but different sides of the diamond should be presented to the wheel at different times, in order that the diamond may not be *worn flat* on one side. To prevent excessive heat, which is injurious to the diamond, a full stream of water should be kept running on it when in use.

To Prepare the Wheel for Fine Finishing Cuts the traverse of the diamond across the face of the wheel should be *slow and uniform*, so as to give a *smooth and lustrous* surface to the wheel. But for *rapid and heavy* grinding it is advantageous to leave the wheel-face *somewhat rough*. Nevertheless, it must be *true and parallel* with the traverse of the sliding-table.

Glazing.—The particles of grinding material are minute cutting-tools, which, when they become *dull*, must be *broken away* by contact with the work. If a wheel is so hard that the particles are retained too long, instead of cutting effectively the wheel glazes and heats the work. In some cases the heat thus generated will so *distort* the work as to seriously interfere with the accuracy of the grinding. In general, a wheel of *coarse grain* is less likely to heat the work than a wheel of fine grain.

Remedies for Glazing.—Glazing may usually be prevented either by reducing the wheel speed or by using a softer wheel. When it is not practicable to substitute a softer wheel, the hard wheel may in some cases be prevented from glazing by reducing its cutting surface

with the diamond. But as a narrow-faced wheel necessitates *slow feed*, the latter course is not economical.

A wheel suitable for *heavy cuts* on *hard* materials, such as *chilled iron*, etc., may glaze when making the finishing cuts. The remedy in this case is to use a wheel of *finer grit* for finishing, otherwise the coarse wheel must be redressed with the diamond as often as it becomes glazed. As a *possible exception* to the foregoing it is said that *carborundum in the finer grits* or grains, if allowed to glaze, gives an *excellent finish*, particularly on *hardened steel*.

"Sizing Power" of Wheels.—When a wheel is of the proper grade and grain for a given piece of work, both work and wheel being revolved at suitable speeds, the wheel neither glazes (except as noted above) nor wears away too fast; it possesses "sizing power." That is to say, the particles are broken away sufficiently fast to keep the wheel *sharp*, but not so fast as to make the work *tapering*. If now, while other conditions remain, a second piece *double the diameter* of the first be substituted for it, there must be a corresponding reduction in the number of revolutions of the work; otherwise the work at this *increased surface speed* will break away the particles of grinding material so fast as to *destroy* the sizing power of the wheel.

A wheel that would work with greatest economy on a *short* shaft might *fail in sizing power* on a very *long* shaft. For this reason it is sometimes necessary to use a somewhat *harder* wheel on *long* work than would otherwise be desirable. But the sizing power of a soft wheel may be enhanced by running it *faster*, though care should be used to keep within *safe limits*.

Grade of Wheel in Relation to Diameter of Work.—Other things being equal, work of large diameter requires a softer wheel for a given surface speed of the work and *depth of cut* than work of small diameter. Under the *same conditions* softer wheels are required for internal grinding and for flat work than for external cylindrical grinding. The foregoing statements are based on the theory that the greater the area of wheel contact the softer the wheel required. But in applying this principle no account should be taken of *small differences* in wheel contact.

Causes of Chattering.—The causes of chattering in cylindrical grinding are not altogether different from those which produce a similar result in lathe work. Small wheel-spindles, loose wheel-spindles, unbalanced wheels, small work-centers, small machine-centers, loose fits in the sliding parts, long work not properly supported with back-

rests, high work speeds, and wheels too hard for the work, are some of the causes of chattering. A knowledge of the cause will generally suggest the remedy. Reducing the width of wheel-face and feed will in some cases prevent chattering, but as this lessens the quantity of work the other remedies should first be applied as far as practicable.

Uses of Water in Cylindrical Grinding. Causes of Eccentricity.—It is very important in grinding *long* work between centers to keep the work cool. For this purpose, the grinding-machine is furnished with a pump and a very liberal and *even* supply of water should be used.* It is said that a degree of *heat which is imperceptible to the touch* will curve the work. A very slight degree of curvature may be detected, being shown by sparks on the convex side of the work. In such cases as require a small amount of very light grinding on short work, and especially in short *chuck* work, water may be dispensed with.

The smallest speck of grit between the machine-center and the work-center will cause eccentricity. Now, this speck of grit is likely to wear away during the process of grinding, and this would cause a varying degree of eccentricity. Eccentricity may also be caused by wear of the centers due to lack of oil, or by the centers being made too small. The work-centers should be amply large, they should fit the machine-centers so as to insure a full bearing, and they should be kept scrupulously *clean and well oiled.*

Selecting a Wheel for Machine Grinding.—There are so many conditions involved that it is difficult to give definite rules for the selection of wheels. Generally speaking, the *harder* the stock the *coarser* the wheel should be; and with respect to *grade* the harder the stock the *softer* the wheel required.

A wheel should cut without appreciable pressure. If the wheel requires excessive pressure and *heats* the work, regardless of the surface speed of the latter, it is too hard for that work. If after trying the lowest reasonable work speed, and other expedients, such as fast *wheel* speeds, light cuts and fast feed, the wheel still loses its size too rapidly, it should be rejected in favor of a harder wheel.

Manufacturers of grinding-wheels give in their catalogues rules which will answer in an approximate way for the selection of wheels, but to get the best results the wheel should be selected by the manufacturer, who should be given full particulars concerning the work for which the wheel is required.

* Small quantities each of sal soda and machine oil mixed with the water will increase the effectiveness of the wheel and at the same time prevent rust.

Care of Grinding Machines.—In order that the grinding machine may work with the high degree of accuracy for which it is designed, it is absolutely necessary that it be given intelligent and conscientious care. The sliding surfaces and wheel-spindles must be kept *scrupulously clean* * and properly adjusted; and they must be lubricated with a *good grade of oil that will not gum. Sperm-oil only* should be used on the spindle of the *internal grinding fixture.* The main wheel spindle and its boxes are usually made of material that will admit of the boxes being adjusted sufficiently close to *heat* somewhat; and this close adjustment is necessary in *fine work.* When oiling the machine, special care should be taken to prevent *grit* from getting into the oil-holes.

Precautions as to Belts.—The belts immediately connected with the grinder should be *pliable, evenly coupled* and *free from* any *irregularities* that might cause *vibrations* in the machine.

Economy in the Use of the Grinder.—In order to use the grinder with the greatest economy it is important that no time be wasted in the preparation of the work in other machines. In external cylindrical work, *nicety with respect to the diameter* and smoothness of the turning, or other preparatory processes, is quite unnecessary. Generally it is sufficient to *rough-turn* the work to within .005″ to .030″ of the final diameter. The *sizing* can be more economically done in the grinding machine. As stated in another paragraph, the preliminary turning is in some cases dispensed with *entirely,* rough steel shafts $\frac{1}{16}$″ *lar ger*than the drawing dimensions being machined to the finished diameter in the grinder.

Grinding Allowances for Hardened Work.—In turning work which is to be *hardened and ground* sufficient grinding stock should be left to compensate for the *distortion* due to the hardening process. A shaft or mandrel generally requires about $\frac{1}{32}$″. Very short pieces require less. If a shaft springs more than $\frac{1}{32}$″ in the hardening process, it should be straightened before being ground.

The grinding allowance for case-hardened work must not be excessive; otherwise the hard surface, which has but little depth, will be ground away.

Allowance for Internal Grinding.—Because of the necessary *frailty* of the wheel spindle used for internal grinding, and the impractica-

---

* The bearing and sliding surfaces should be flushed with *kerosene oil* occasionally

bility of getting the proper wheel velocity, the grinding allowance for this class of work should be reduced to the minimum. In very small pieces one or two thousandths of an inch is sufficient.

Finishing Cuts.—The stock left for grinding is not ordinarily taken off in one traverse of the wheel. If a shaft, for example, is to be ground, it is first rough-ground as quickly as possible in one or more cuts to within .002″ to .005″ of the final diameter. The wheel is then "trued" with the diamond and several finishing cuts are made, the last of which should be very light—not exceeding .0005″ to .001″ in depth. "When stock is ground to about the right size, it must be allowed to pass the wheel a number of times to get the finish." The traversing feed is usually reduced for the finishing cuts, and the work speed is also reduced, if persistent *chattering* occurs.

When there are a number of small pieces to grind it saves time to rough-grind all the pieces before any are finished. This method requires *but little truing of the wheel.*

The instructions given elsewhere for the selection of wheels refer as well to the finishing qualities of the wheels as to their other characteristics. In respect to the different abrasives, emery gives an *excellent finish,* especially on *hardened steel,* but it is somewhat unsatisfactory in *sizing power* on *long* work. Corundum answers very well for work of both large and small area, though it requires a finer grit for a given finish on hardened steel than does emery. The artificial abrasives will produce a very good finish on most materials—probably on all. A *combination wheel* is less likely to glaze in making the finishing cuts than is a wheel of single grit. In most cases the same wheel that is used for the roughing cuts, whether the wheel be made of natural or artificial abrasive, is also used for finishing.

The Wide Range of Grinding Machines.—It is important that engineers should be informed concerning the possibilities of the *modern* grinding machine. The scope of machine grinding is being *constantly extended.* For example, it is now considered *economical* to use the plain grinder on such *low-grade* work as agricultural machinery. Automobile details, including *cranks,* pistons, and cylinders; and a great variety of *chuck work,* such as cone pulleys and single pulleys, are at the present time finished either in *special grinders* or in the regular grinding machines. In grinding *pulleys* at the works of the Landis Tool Company, "The wheel is previously given a *concave face* of a radius suitable for the pulley to be crowned, by means of a radial

truing device." * This is suggestive of what may be done by wheels of *special shape* fed to the work by the *cross-feed only*.

Some Popular Fallacies Concerning Grinding.—The old theory that the *abrasive material becomes imbedded* in the metal being ground (especially in *brass*), causing undue wear of bearings, *has been disproved* both by practical experience and scientific investigation. However, there are still a few mechanics who consider it impracticable to grind such materials as *copper, babbitt, soft rubber, etc.*, believing that these soft materials will *adhere* to the wheel. Practically all materials used in the industrial arts may be ground successfully with wheels properly constructed for each case.

---

* See articles by H. F. Noyes in "Machinery," July, 1907, and by J. H. Hollinger in "American Machinist" of Feb. 13, 1908. Other valuable articles are given in the "American Machinist" of Aug. 22 and Oct. 17 and 24, 1907.

CHAPTER XXIX

POLISHING- AND BUFFING-WHEELS

Polishing- and Buffing-lathe.—In connection with this machine, which is shown in Fig. 672, a variety of polishing-wheels and materials are employed. The polishing-wheels are held between the collars on the spindle in about the same manner as emery-wheels are held, and the article to be polished is applied to the revolving wheel by hand. The over-hang of the spindle and its bearings affords convenient access to both sides of the wheel as well as to its periphery. Among the different polishing-wheels used in the buffing-lathe are wooden wheels, walrus-wheels, brush-wheels, rag-wheels, felt-wheels, paper-wheels, and canvas-wheels.

Wooden Wheels.—Leather-covered wooden wheels are employed for various classes of polishing. These wheels are made of wood, whitewood being suitable. The wood is built up on a metal bushing in broken-joint sections after the manner of pattern-making. Oak-tanned sole-leather about $^1/_4$″ thick makes a good covering. After slightly moistening the leather in hot water it should be stretched around the wheel, flesh side in, and glued, the glue being quite hot. To assist in holding the leather, metal tacks may be used temporarily, but these should be replaced by wooden pegs driven below the surface of the leather.

The leather is coated with emery, which may vary from No. 60 for the preparatory work to flour emery for finishing. In applying the emery the leather is first coated with *hot* glue. The wheel is next *quickly* rotated over a planed board, upon which the emery has been *evenly* spread. These wheels give a fairly good surface on cast iron, wrought iron, and steel, flour emery being used for the finishing process.

For obtaining a higher finish or polish a "grease wheel" may be used. A wheel "set up" with flour emery and glazed or worn smooth will answer. The oil or grease may be applied to the wheel by any convenient means while the wheel is in motion. If oil be used, it may be applied with a thick cloth. If cake tallow be preferred, care should be taken to give the wheel a very thin coating. Fine emery-cake

applied to the wheel after it has been greased will make a good polishing material.

Brass also may be polished on emery-coated wooden wheels. It may be roughed down with emery and finished with red rouge or other

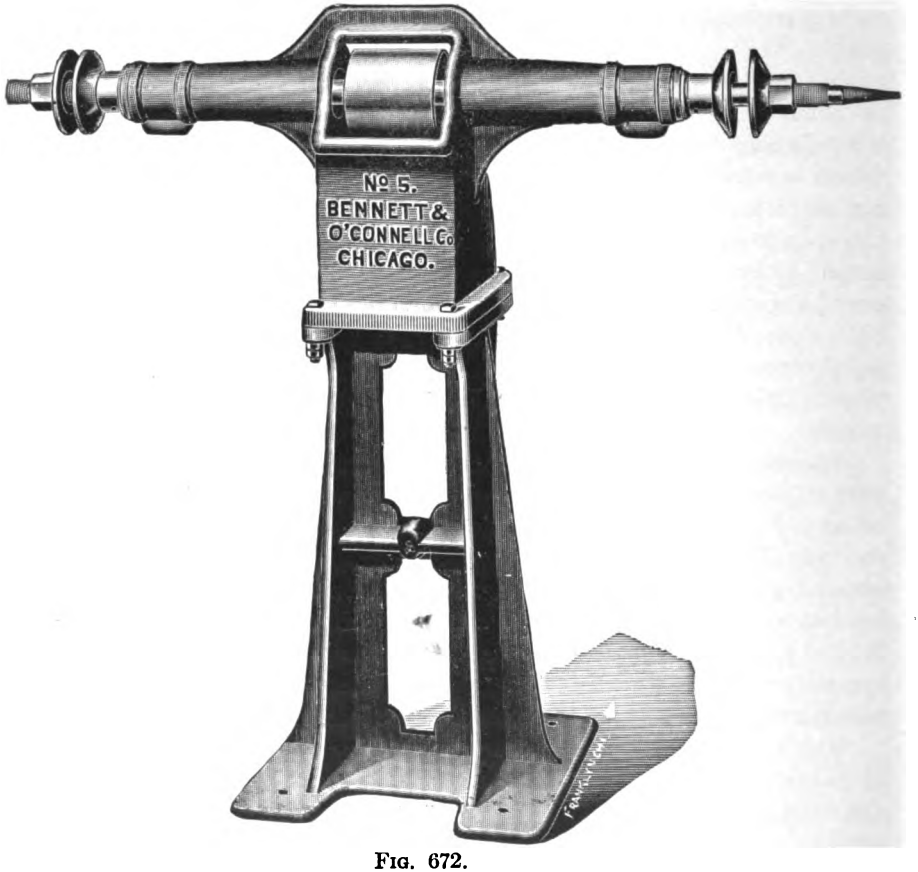

FIG. 672.

suitable polishing material, cake-tallow being used for the preparatory greasing. Before greasing it the surface of the wheel should be glazed as above described.

Walrus-wheels.—Walrus (or sea-horse) hide cut into disks and glued together makes a first-class polishing-wheel. A variety of polishing materials is used with these wheels. Emery may be applied in connection with glue in the same manner as in the case of wooden wheels.

Walrus-wheels may be used as grease wheels also. Some prefer to keep these wheels for the final finishing, using crocus or rouge for this purpose. When thus used the emery and glue coating may be dispensed with. Walrus-wheels are principally used for polishing tools and cutlery, but they are also used to some extent in polishing brass. Powdered pumice-stone mixed with oil and applied to the wheel with a brush makes a good preparatory surface on brass. Crocus, rouge, or nickel rouge may be used to give the final polish. Nickel rouge is also used for polishing nickel. Vienna lime dipped in oil and applied to the revolving walrus-wheel will give a fine finish on iron and steel. Crocus and nickel rouge come in cakes and may be applied to the revolving wheel by hand without oil.

Brush-wheel.—This is a kind of circular brush, the hair being held in the brush in about the same manner as in a common brush. Vienna lime is often used on these wheels. In polishing steel or iron the lime is preceded by oil and emery, these being applied in any convenient manner. Crocus or rouge mixed with water or oil may be used on brush-wheels for both brass and steel. To get the best results these materials should be preceded by powdered pumice-stone mixed with oil.

Rag-wheels.—Rag-wheels, or buffs, admit of wide application as polishing-wheels, but they are not adapted to work requiring the corners to be kept sharp. They may be used on about all the common metals, different polishing materials being used to suit each case. For polishing steel and iron a composition of Vienna lime, crocus, and beeswax is sometimes used. This material comes in cakes and it is dipped in oil and applied sparingly to the revolving wheel. Crocus mixed with tallow and oil is used on rag-wheels for polishing fine steel goods and for brass and plated work. It is especially adapted to nickel plate Crocus alone is often used on these wheels, being rubbed on while the wheel is in motion. Rouge is used on rag-wheels for steel, iron, nickel plate, brass, bronze, and copper. It is sometimes mixed with alcohol and water (equal parts of each) into a thin paste. In this form it may be applied to both the wheel and the work with the finger.

Glue and emery coatings are not used on rag-wheels. As above indicated, various compounds are applied to the wheels during the progress of the work.

In using any of the polishing agents, such as rouge, crocus, etc., it is best to apply the material sparingly and often, rather than in thick coatings. The work is delayed rather than hastened by a too free use of the polishing-cake.

When it is necessary to preserve the exact shape of the work, especially when corners are to be kept sharp, the surface of the wheel should be approximately unyielding. Leather-covered wooden wheels are commonly used for such requirements, but to get the best results the wheel should be covered with sheet lead instead of leather.

The Emery-stick.—This is simply a stick of wood coated with alternate layers of hot glue and emery. It is used to remove the old glue and emery from a wheel before recharging with new emery. The stick is held against the revolving wheel, care being taken to avoid applying sufficient pressure to injuriously heat the leather.

Rag-wheels may be cleaned by applying the point of an old file to the revolving wheel.

Speed of Polishing-wheels.—Wooden wheels are run at a speed of 6000 to 7000 feet per minute. As there is danger in such high velocities, it is important that these wheels be purchased of experienced and reliable manufacturers. No novice should attempt to make one.

Walrus-wheels may be run at a velocity of 7000 to 8000 feet per minute. They are not so likely to fly apart as are wooden wheels.

Brush-wheels are made in sizes as small as 2″ diameter. It is not convenient to run such small sizes at a high surface speed, but the larger sizes are sometimes run as fast as 5000 feet per minute.

Buffs or rag-wheels are run at 5000 to 8000 feet for *coloring* and from 8000 to 14,000 feet per minute for "cutting-down" or preparatory work. For cutting-down work a *new* buff should be about 14″ to 18″ diameter, and the counter-shaft operating the buffing lathe should preferably have provision for several speeds. When a buff is worn so small that the fastest available speed will not give sufficient centrifugal force to hold the buff out stiffly to its work, the buff should be discarded, or used on another spindle.

In finishing castings or other materials which have not been machined, the work should have a thin, smooth scale. If the surface be *deeply* pitted, too much time will be required to finish it. Canvas-wheels, set up in No. 80 emery, are well adapted to the first or cutting-down process in such work.

CHAPTER XXX

THE INTERCHANGEABLE SYSTEM OF MANUFACTURE

Jigs.—By the interchangeable system is meant, such shop methods as enable the manufacturer to furnish duplicate parts to replace broken or worn-out parts of his machines. Of fundamental importance in such a system are accurate measuring-instruments. These have already been described. Next in importance are jigs and special fixtures for the accurate and rapid machining of the duplicate pieces. If an engine-cylinder head is to be drilled to receive the studs which secure it to the cylinder, one of two ways could be used. The head could be carefully laid out by rule and compass and drilled to the marks, or a device could be made to fit over the cylinder-head having holes in exactly the right positions to guide the drill. Such a device is called a jig, and it pays to make this tool when a large number of duplicate pieces are to be manufactured. Should one of these cylinder-heads need to be replaced after shipping the engine, if drilled by a jig a new one could be sent with the assurance that it would require no refitting.

Inasmuch as the jig is used for a large number of duplicate parts it is essential not only that it be made with great accuracy, but that provision be made for maintaining this accuracy. With this end in view the guiding-holes in the jig are not allowed to come in contact with the drill or reamer (which would wear them out of shape), but are made larger and bushed, as at *B*, Fig. 673. If the holes through the cylinder-head are $^5/_8''$, the holes in the jig should be about $1^1/_8''$, and bushings with $^5/_8''$ holes should be inserted to guide the drill. The bushings are sometimes made of tool steel and hardened, which makes them very durable; but inasmuch as the hardened bushings may injure the drill, or reamer, some mechanics make them of cast iron and renew them when worn. Renewing the bushings is an inexpensive process compared with renewing the whole jig, and it does not in the least affect the original accuracy of the jig.

The same jig is in some cases used for both the cylinder-head and the flanges on the ends of the cylinder; but as the holes in the

cylinder-flanges are made smaller to allow for thread on the studs, the jig requires an extra set of bushings for the smaller holes. Otherwise a special drill would be necessary.

It is frequently necessary to make jigs for work which is only *partly machined.* If we require a jig for the steam-chest cover of a steam-

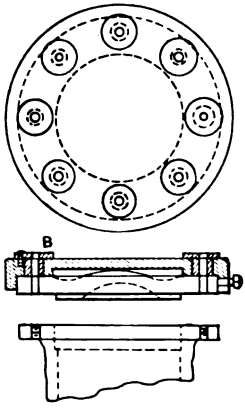

FIG. 673.

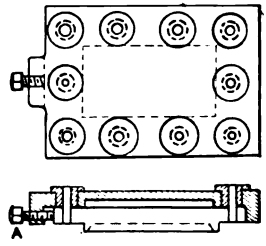

FIG. 674.

engine, and only three edges of the cover are planed, the jig could be made with planed lugs fitting the planed edges of the steam-chest cover, the holes being laid out with reference to these planed edges. The jig should be secured to the steam-chest cover by set-screws in lugs, which set-screws should press against the rough edge of the cover, as shown in Fig. 674.

An excellent example of jig-making and jig work is shown in Figs. 675, 676, 677, and 678.* Fig. 675 is a working drawing of a side-frame of a small machine to be drilled and reamed. The dimensions are given to the third decimal place, thus indicating the degree of accuracy required. There are two of these frames for each machine, and as they are very nearly alike, the jig for the drilling is made reversible, so that after drilling one frame, the other may be secured to the opposite side of the jig and drilled in a similar manner.

Fig. 676 shows the jig. The main casting *D* which holds the bushings has four feet, lettered *C*, by which the jig is supported on the drilling-machine. These feet are *hardened tool steel.* The frame is held between the "supporting-plate" *E* and bushing-plate *D* by the clamps *G*. The

* These cuts were first used to illustrate an article by W. H. Pike, Jr., in "American Machinist," vol. 24, page 1296.

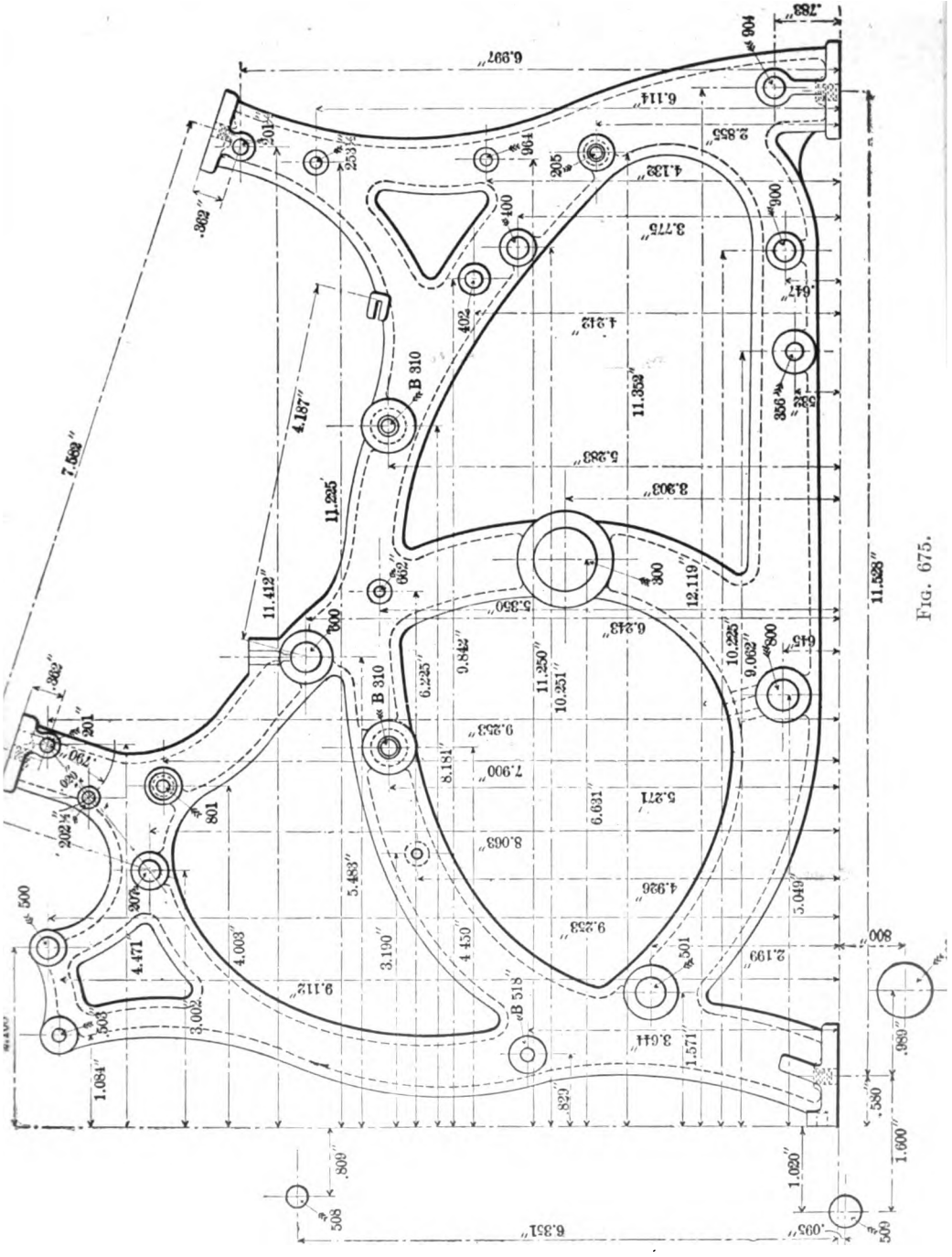
6.997"
6.114"
2.855"
4.132"
3.775"
4.242"
11.352"
5.283"
3.303"
12.119"
11.528"
5.350"
6.243"
10.225"
9.062"
11.250"
10.251"
9.842"
6.225"
9.253"
8.181"
7.900"
6.631"
5.271"
8.063"
4.926"
9.253"
5.483"
3.190"
4.450"
4.003"
9.112"
4.471"
3.002"
1.084"
3.644"
1.571"
2.199"
5.049"
11.412"
11.225"
4.187"
7.582"
B 310
B 310
B 518
6.351"
1.020"
1.600"
.580"
.989"
.809"
.783"
.362"
.647"
.095"

FIG. 675.

bushing-holes in plate *D* are all of the same diameter as are also the holes in the bushings. This uniformity simplifies the making of the bushings

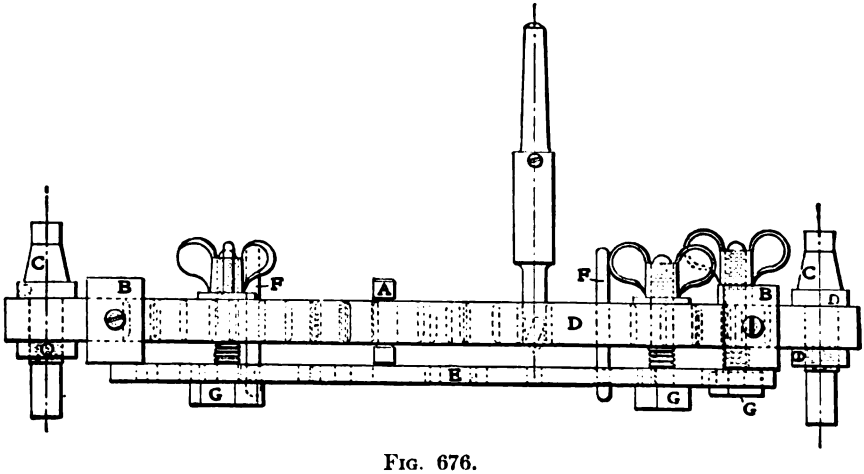

FIG. 676.

and facilitates accurate location of the holes for the bushings.* The latter were bored and reamed on a milling-machine and "the position verified by height-gage and vernier." To equalize the strains in the castings due to forcing in the bushings, some were forced from one side and some from the other.

An important feature in connection with this jig is the method of guiding the drills and reamers. These do not touch the bushings, being

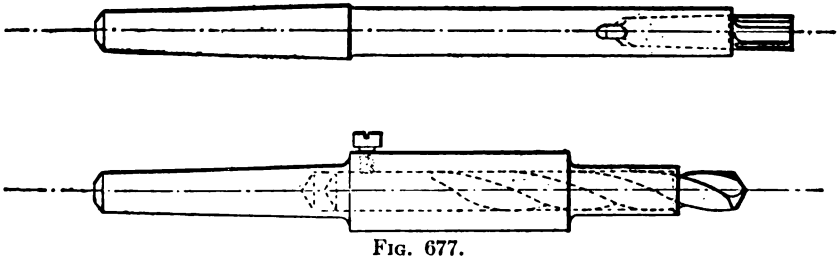

FIG. 677.

held in the special sockets, as shown in Fig. 677. The lower ends of these sockets are hardened and ground to fit the bushings. This arrangement prevents in a great measure the wear of bushings and tools.

* Special methods of locating holes in jigs are given in Chapter XXXI.

The various sizes of drills and reamers used in the sockets project just far enough to pass through the work.

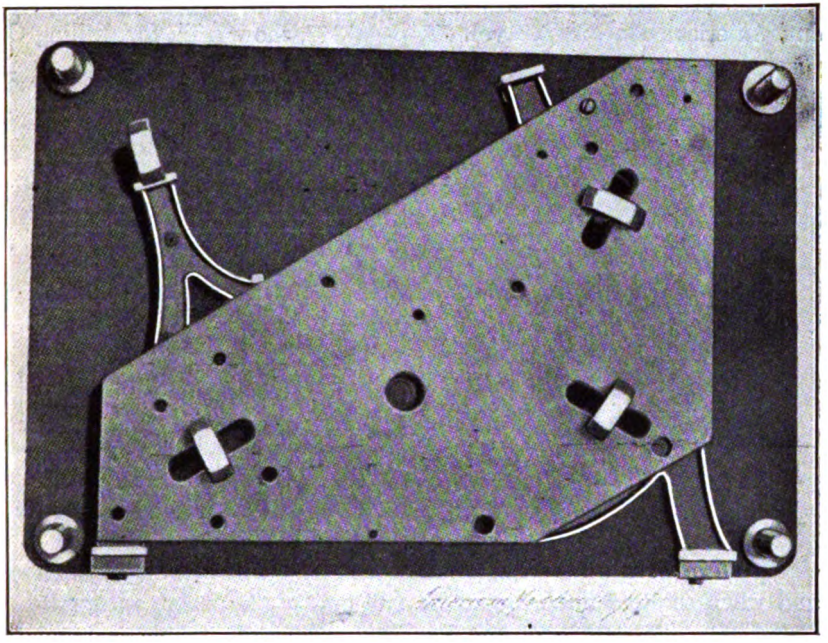

FIG. 678.

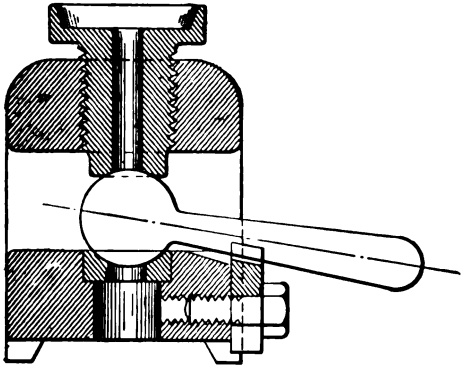

FIG. 679.

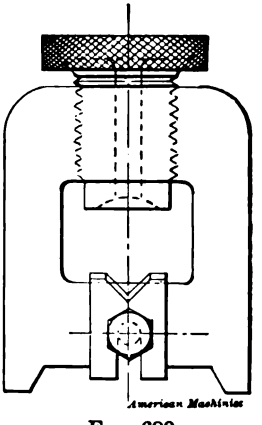

FIG. 680.

Fig. 678 is a bottom view of the jig with the side-frame in place. The two planed feet of the frame abut against the guide-plates, which are

shown at *B* in Fig. 676. The third locating-point is a hole drilled before milling the feet. From this hole the milling was gaged.

Figs. 679 and 680, which are taken from an article by "Cherry Red" in "American Machinist," vol. 27, page 357, show a jig for drilling the

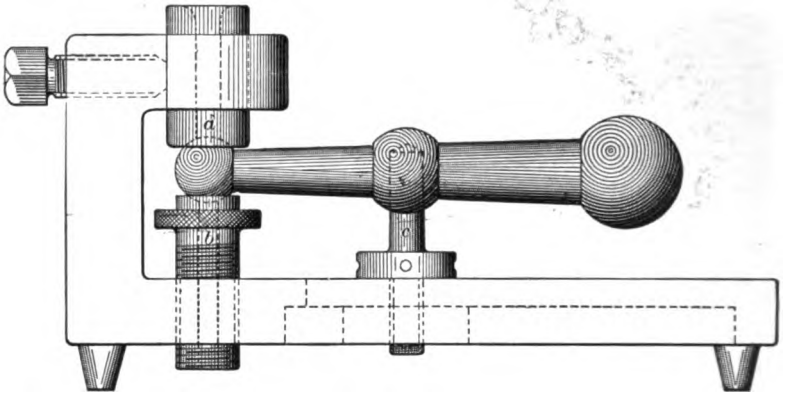

FIG. 681.

clamp-levers used on the tail-stock of a lathe. The bushing is threaded, and when screwed down upon the ball end of the lever, automatically centers it. The angle of the handle to the drilled hole is regulated by the adjustable V block shown.

The jig shown in Fig. 681, the cut of which is taken from "American Machinist," dated September 29, 1888, needs but little explanation. The

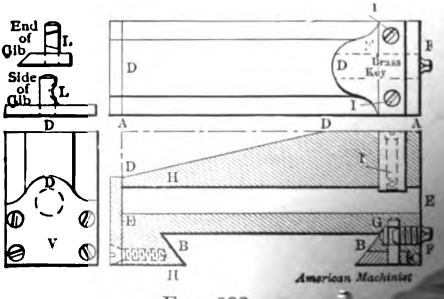

FIG. 682.

central hole of the lathe-handle may first be
the bushing *a* and adjustable seat *b*. The

jig as shown, for drilling the end hole, the central hole fitting the stem *c*. In order to drill holes different distances between centers the stem *c* is adjustable in a slot.

Jigs are used not only in the drilling-machine but also in connection with the planer, milling-machine, etc. When used on these machines

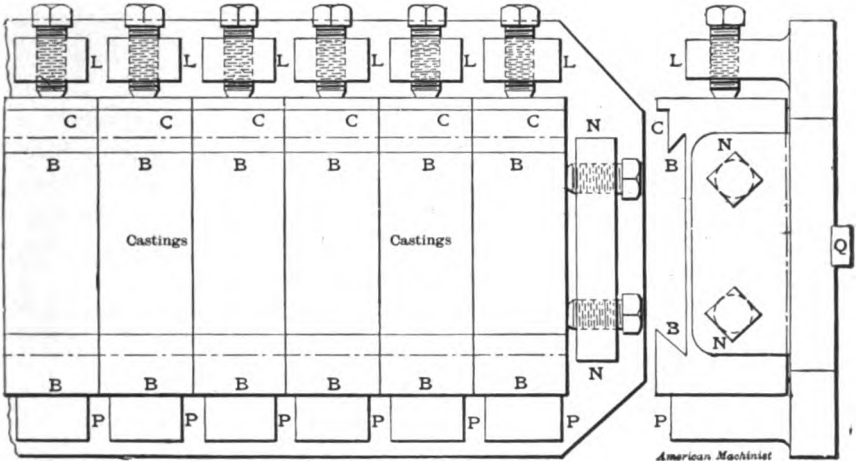

FIG. 683.

the jig is sometimes called a "fixture." Fig. 682 shows three views of a device which is to be accurately machined so that duplicates may be interchangeable. Some of the smaller parts, including the plate *V*

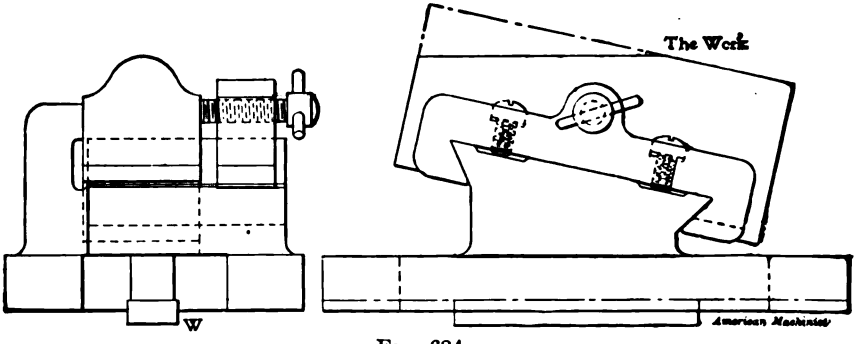

FIG. 684.

and brass key *I*, are bolted to the main casting and will not be included in this description. Neither will the drilling and reaming operations

be considered, such operations being described in connection with other jigs.

The first operation of squaring up the sides, etc., is done in a jig or fixture, ten castings being milled at one time.

For the second operation, viz., that of milling the dovetail *B* and the gibway *C*, the jig shown in Fig. 683 is used. This jig, which is shown broken in the illustration, holds eight castings. The jig is accurately machined at all essential points, and the castings are held against the locating-lugs *P* by the set-screws in lugs *L*. In the other direction, the screws in lug *N* force the castings up against a machined face not shown. The jig is accurately located on the miller-table by the fitting of the tongue *Q* in the T slot of the table. Being thus located, the dovetailed surfaces *B* are milled one at a time with an angular cutter. Then the surface *C* is milled with a plain cutter, a vertical milling attachment being used in these operations.

The next operation is that of milling the curved surfaces *DD*. For this work the jig shown in Fig. 684 is employed, a formed milling-cutter

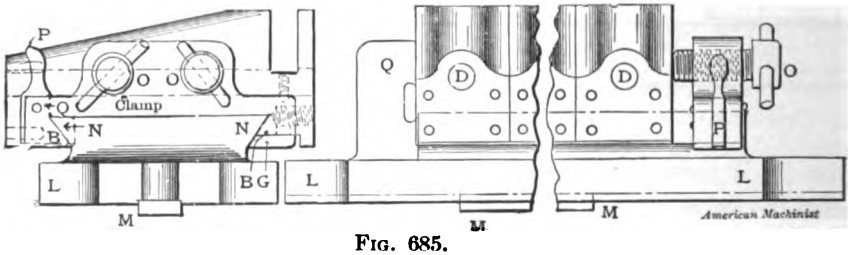

FIG. 685.

being used on each casting separately. The method of holding the work in this jig is clearly shown in the illustration.

The drilling was done next, but of this we shall not speak.

The deep slot or keyway was milled as shown in Fig. 685,* a number of castings being held in the fixture and milled in one operation.

This may seem like a very expensive outfit for such work, but when a large number of pieces are to be made, the first cost of the fixtures is fully justified. Not only may the work be done much quicker than by the old method, but less skilful labor may be employed. Jig-making itself, however, requires a high degree of skill, and *the question as to whether it pays to make a jig or not depends upon the number of pieces that are to be made.*

---

* Figs. 682 to 685 are from cuts accompanying an article by Joseph V. Woodworth in "American Machinist," vol. 26, pages 1434 to 1435.

Some jig-makers leave a space between the work and the lower end of the bushing about equal to the diameter of the drill or reamer. The object in this is to allow the chips to lift out of the hole without working up in between the tool and bushing and wearing the latter.

Various special fixtures are shown in connection with milling-machine work in Chapter XXVI.

Machine Nomenclature.—Another very important requirement in connection with the interchangeability of machine details is a system of machine nomenclature. By this we mean a plan of symbolizing machines and parts of machines. Different manufacturers have different systems, but a very simple plan is to give each different design of machine a letter, or a combination of letters, and each part of the machine a number. Thus, the first machine could be *A*, and the first piece of this machine would be No. 1; and if there were a thousand pieces in the machine the last would be No. 1000. The machine as a whole would be known by its letter, and the details would be designated by the machine letter and detail numbers. The first piece on machine *A* would be marked *A* 1, the second piece *A* 2, etc. The next different machine built would be designated as *B*, and its parts *B* 1, *B* 2, *B* 3, etc.

If any detail of a machine be slightly altered, we may indicate this by giving it a sub-letter; for instance, *A* 1 when first changed would become *A* 1*a*, the second change would be *A* 1*b*, and so on. If sufficient changes were made to use all the letters of the alphabet, the piece would be so different from the original as to justify a new number. This would be the next number above the highest number in the machine.

As indicated above, when all the letters of the alphabet are taken, the machine may be symbolized by combining the letters. Thus, the next machine to *Z* could be designated as *AB* or *AA*, the next *AC* or *BB*, etc.

Some prefer to designate the machine by the initial letters of its name. This plan obviously has some advantages, but it has also the disadvantage that the second design of any class, and each subsequent design, must take a sub-letter. In designing a series of upright drills, for instance, if the first size be marked *UD*, subsequent sizes would be marked *UDa*, *UDb*, etc.

Some manufacturers give each machine a number in addition to its letter. In this system the first machine of a given design would be *A* 1, the second *A* 2, etc. Whether the machine number appears on the name-plate of the machine or not, it is kept in the factory, and the number of machines of a certain design sold, together with any alterations, are noted in records kept for this purpose. As indicated, the machine letter is marked on

the detail in connection with the detail number or symbol; but the machine number (except in such systems as use numbers to symbolize the different designs of machines) should not appear on any other part than the name-plate casting.

A system of machine nomenclature is valuable not only in ordering duplicate parts, but in distinguishing the castings and patterns in the shop. In cases where there are many kinds of patterns this greatly facilitates the work in the shops.

CHAPTER XXXI.

LAYING OUT WORK SPECIAL METHODS OF LOCATING HOLES.

Meaning of the Term Laying-Out. A Simple Case.—The expression laying out, as used in the machine-shop, refers to those geometrical operations in which the shapes and dimensions of work are indicated by lines made with various marking instruments. Most of the required tools are described in Chapter I. In some complicated details requiring planing, boring, drilling, etc., a preliminary "lay-out" is necessary to determine whether the piece will "true up" to the dimensions. Having established the main base lines in this way the work is planed or otherwise machined to these lines, and then the centers for the boring, drilling, etc., are established in proper relation to these base surfaces.

A simple detail like that shown in Figs. 686 and 687 requires no preliminary lay-out, mere measurement being sufficient. Having planed this piece to the drawing dimensions, one side is coated with a solution of blue vitriol, with a mixture of pulverized chalk and water, or with any suitable preparation, and the center lines *AC* and *BD* (Fig. 686) are laid out with a hermaphrodite caliper, or with a scratch-gage set to $^5/_8''$ as shown in Fig. 687. With the same instrument set to $^3/_4''$ the lines *AB* and *CD* are marked. The centers *A*, *B*, *C*, and *D* may now be indented with the prick-punch described on pages 41 and 42. From these centers and with dividers successively set to the dimensions given, short arcs are next drawn intersecting the lines *AC* and *BD* in *E*, *F*, *G*, and *H*, the points thus located being prick-punched as before. With dividers set to the proper radii circles equal in diameter to the required holes should next be drawn from the indented centers. These circles may also be indented with fine prick-punch marks about $^1/_4''$ apart. This precaution, however, is scarcely necessary if blue vitriol is used for the coating.

The circles of the same diameter as the drill will usually be obliterated by the drilling, and it is a good plan to make additional larger circles

by which the accuracy of the drilling may be tested when the work is done.

To insure accuracy the prick-punch marks in the centers of the circles should at first be made very light. When the laying out is com-

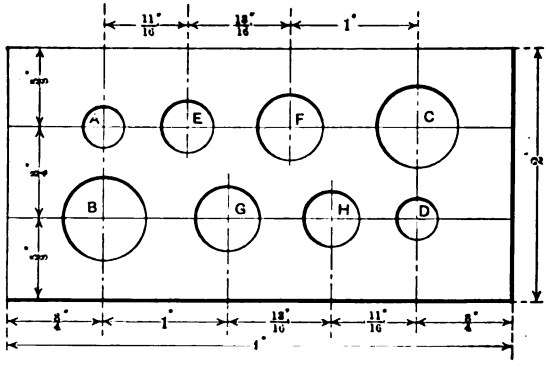

FIG. 686.

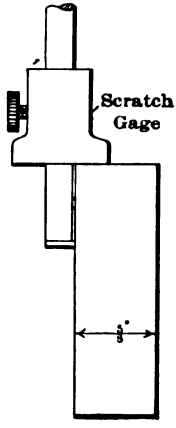

FIG. 687.

pleted they should be enlarged with the center-punch in order to properly guide the drill-point.

Laying Out Plates.—A base plate, or laying-out plate as it is sometimes called, would be required in connection with the remaining examples, and it will be proper to briefly describe the construction of such plates. For small and ordinary work a laying-out plate is a very simple affair. Any cast-iron plate of rigid construction and having an accurately planed top will answer. It is well, also, to have the edges of the plate planed at right angles. A surface-plate like one of those shown in Fig. 90 would make a first-class laying-out plate; but the scraping essential for a surface-plate is scarcely warranted in making a plate for laying out work.

In shops where a great deal of laying out is done circular plates, made to revolve upon a central axis, are sometimes used. The principal object of this construction is to admit of turning any side of the work toward the light.

Laying-out plates for very large work should be proportioned by by a competent designer, and such plates should be supported upon a

foundation of masonry. Small plates are often used upon the vise-benches, but a small bench or stand, so made that the workman may conveniently get around it, is better.

The slightest lump raised upon the laying-out plate with the hammer will interfere with the accurate use of the surface-gage and other tools. Therefore, the practice of straightening strips of metal on the plate, and other such abuses, should be strongly condemned.

Angle-plates, V blocks, clamps, etc., described in the chapter on drilling-machines and elsewhere, are useful accessories of the laying-out plate.

Laying Out Cylindrical Work.—Several ways of finding the center on the end of a small shaft are explained in connection with Figs. 326, 327, and 328. The following methods of establishing the centers in, and laying-out, cylindrical work apply more particularly to large cylinders.

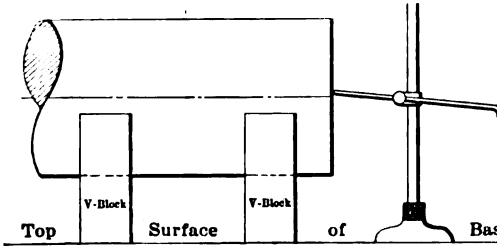

FIG. 688.

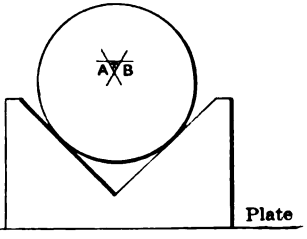

FIG. 689.

Figs. 688 and 689 illustrate a method of locating the centers on a large forged shaft. The shaft is placed in the V blocks which rest upon a plate as shown. The scriber of the surface-gage being adjusted approximately to the center, a line AB is marked on each end of the shaft as indicated in Fig. 689. This is repeated in two other positions of the shaft, when it will show intersecting lines in about the same manner as illustrated. If the surface-gage has been closely adjusted, these lines will enclose a triangle of such small area that the center may be readily established between the lines with sufficient accuracy by a center-punch and hammer. But if the triangle is too large thus to locate the center, it may be found from the three points of intersection by drawing intersecting arcs with the dividers in the center of the triangle as shown.

It is sometimes necessary to establish the center on the end of a hollow cylinder. Fig. 690, which represents the end view of a hollow flanged casting resting in V blocks, will illustrate a method of accomplishing this. It is required to lay out six holes on the flange in a 12″

circle concentric with the body of the casting. A piece of wood is whittled to fit the hole, and a triangular piece of tin having its corners bent over like a tobacco-tag is fastened to the wood. (Wood alone will answer for a rough grade of work.) The center is then located on the tin as in the last example. Having located the center, it may be permanently established with the point of a common scriber. The scriber being pressed against the tin and rotated between the fingers drills a very fine and accurate center.

In a circle of six equal divisions the distance between two adjacent divisions is equal to the radius of the circle. Therefore, in this case,

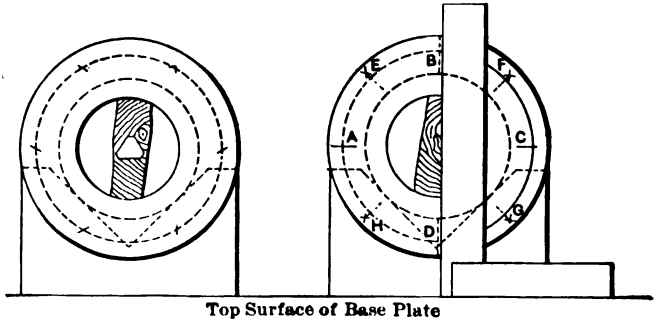

FIG. 690. FIG. 691.

after drawing the circle the six points may be stepped off with the dividers without resetting the latter.

When four holes or divisions are required two of these may be located by marking with a surface-gage a horizontal line through the center of the circle. The intersection of the line and circle will mark the two points. The other two points may be located by drawing a perpendicular line through the center with scriber and try-square, as indicated in Fig. 691. If eight divisions are required, the other four may be found by successively placing one leg of the dividers in $A, B, C,$ and D and drawing with the other leg intersecting arcs, as at E, F, G, H. Lines drawn through the points of intersection of these arcs and through the center of the circle will locate the four points as required. On similar principles other divisions may be made, or they may be stepped of with the dividers by trial and error.

While the preceding instruction for laying out cylinders refers to end laying out, it is obvious that the surface-gage, V blocks, etc., may be advantageously employed for *longitudinal* work also. The centers

for clearance-holes at the ends of keyways are often established in this way. The same principles apply also in locating levers and other details on shafts, and in laying out cranks. A small crank like that illustrated in Figs. 391 and 392 may be laid out as indicated in that example.

Laying Out a Bell-crank.—Figs. 692 and 693 represent a bell-crank lever, which may be laid out as follows: With the hermaphrodite caliper

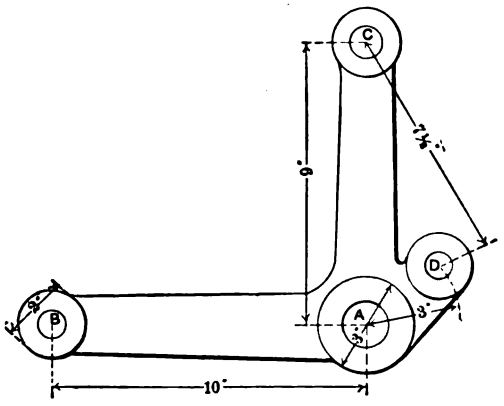

FIG. 692.

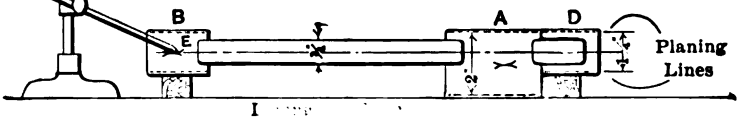

FIG. 693.

draw short arcs on the ends of bosses *A*, *B*, *C*, *D*, thus locating the centers as at *E* in Fig. 693. Block up the casting on the laying-out plate so that the surface-gage scriber when adjusted as indicated at *E* will coincide with similar points on bosses *C* and *D* and will mark a line $^3/_8$″ above the center on *A*. Without changing the scriber draw a line around the lever-arms. If, on account of an error in the pattern, this line should be too much out of the center of the arms, it may be advisable to change it so as to divide the error between the bosses and the arms. Assuming that the center line first established is to remain, now adjust the surface-gage scriber, first $^5/_8$″ below and then $^5/_8$″ above this line, and draw the lines to which *B*, *C*, and *D* are to be planed.

With the last setting of the scriber draw also the upper planing line on *A*. The lower planing line for *A* is drawn with the scriber adjusted $1^3/_8$″ below the center line, after which both sides of each boss may be planed.

When the planing is done the casting is ready to be laid out for *drilling*. As is sometimes the case, the bosses of this detail are cast solid. The laying out may be started by locating with the hermaphrodite caliper center *A* on boss *A* (Fig. 694). With the same instrument two *tangential* arcs are next drawn on *B* as shown in the figure. Now block up the casting so that the planed faces *A* and *C* will be square

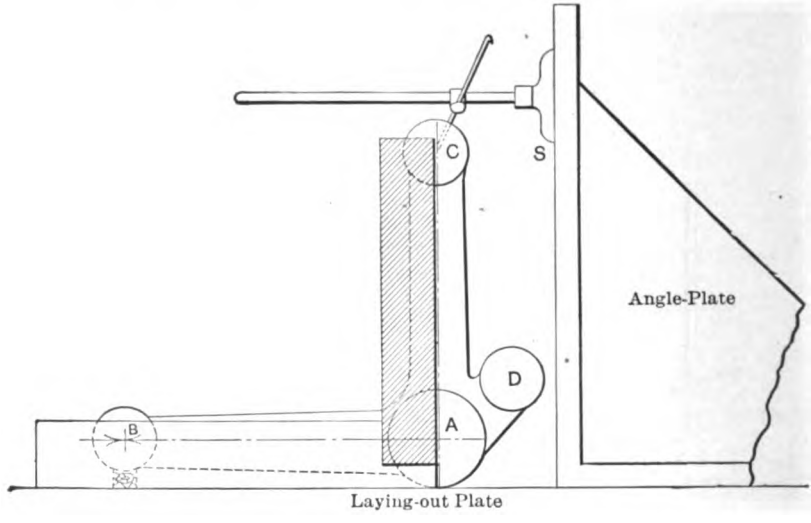

FIG. 694.

with the plate, and so that when surface-gage scriber is adjusted to center *A* it will pass through the point of tangency of the arcs at *B*. (It may be necessary to clamp the casting against an angle-plate.) Draw center line *AB*, and with dividers or trammels set to 10″ draw an arc from prick-punched center *A*, locating center *B*. If this center is too much out of the center of the boss, it may be necessary to divide the error between bosses *A* and *B*. It may be necessary also to make similar corrections with the other bosses. With a square placed in the manner indicated in Fig. 694 draw a perpendicular line through *A* and *C*, and with dividers set to 9″ locate center *C*. This vertical height could also be established with the surface-gage.

If required to establish the center line on the opposite side of boss *C*, where the face is not in the same plane as the corresponding face of *A*, it could be done with an angle-plate and surface-gage as indicated at *S*. For this purpose the face of the angle-plate must be set at right angles to the faces of bosses *A* and *C*.

Ordinary dividers cannot be used for marking the center distances of such *offset* bosses unless the dividers are set to the length of the hypotenuse of a right triangle of which the perpendicular distance between the axes and the distance between the planes of the bosses are the legs. (See Fig. 695.) Generally a surface-gage would be used to establish the vertical height in such a case, the casting being held as in Fig. 694.

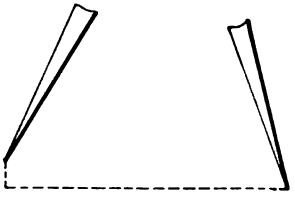

FIG. 695.

The center *D*, when dimensioned as in Fig. 692, should be located by drawing intersecting arcs as at *D*. Having prick-punched all the centers, the drilling circles may now be drawn, an *extra circle* somewhat larger than the required hole being drawn on each boss *to test the hole* after drilling. It will be advisable to prick-punch the circles if blue vitriol has not been used.

Laying Out Work by a Mating-piece.—It is sometimes required to mark the circles for drilling a machine detail from a mating-piece already drilled. If there is nothing to prevent the pieces being clamped *flatly together*, a scriber may be used in the same manner as it would be used with a templet.* In marking the circles the scriber should be held at a constant angle in relation to the sides of the hole; it should not be allowed to wabble. With respect to shape the scriber should be *round* in cross-section, and of uniform taper the first inch or so from the point. If, however, the two details are held apart by projecting lugs, the method illustrated in Fig. 696 will be more accurate. In this figure *A* represents the piece which is to be marked from holes in the mating-

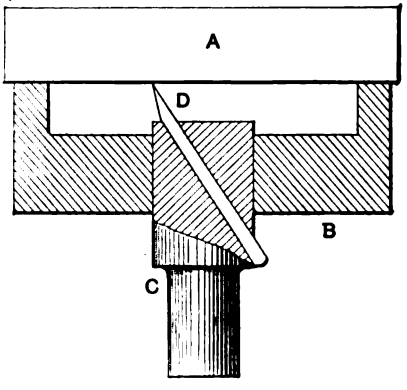

FIG. 696.

* For a definition of templet, see page 19.

piece *B*, and *C* is a plug (wood will answer) which fits closely in the holes. By pressing *lightly* upon the plug and revolving it at the same time the required circle will be marked by the scriber *D*.

In some cases the piece already drilled would be used as a jig by which to drill the mating-piece.

Locating Holes by Contact Measurement.—An expert can lay out and bore holes to within .005″ of given center distances with ordinary tools. This approximation, however, is unsatisfactory for the highest

FIG. 697.

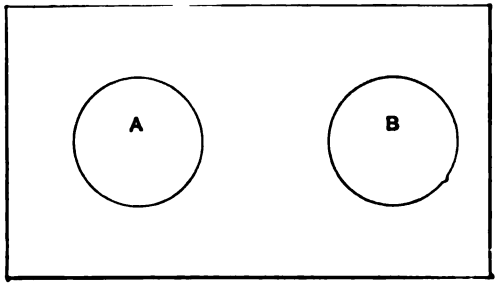

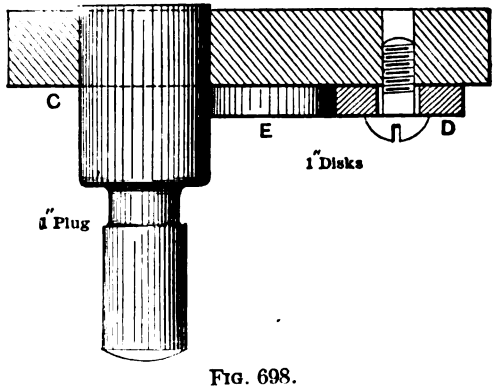

FIG. 698.

grade of jigs, and for some other kinds of work. In such cases contact measurements are sometimes used. Very simple illustrations will suffice to show this principle. In Fig. 697 let *A* and *B* represent two 1″ holes the centers of which are 2″ apart. Now steel plugs and disks can be made to within a small fraction of a thousandth of an inch of the nominal diameters, and it will be assumed that we have a 1″ plug and two 1″ disks, each of the latter having a central hole of about $^5/_{16}$″ diameter.

The holes *A* and *B* are first laid out with ordinary tools, and then one of them may be drilled and bored in the lathe to fit the 1″ plug closely. The other hole should be drilled and tapped for a $^1/_4$″ screw. When this work is done the steel plug is inserted in the 1″ hole as at *C*, Fig. 698, and one of the disks is secured to the work by a screw as shown at *D*. The hole in this disk being $^1/_{16}$″ larger than the screw, the disk may be adjusted so that the other disk *E* will just pass between the plug and the first disk. When the disk *D* is thus adjusted the screw is tightened, *E* and *C* removed, and then the work may be secured in the lathe and "trued up" by disk *D*. For the latter purpose an indicator like that shown in Fig. 355 may be used. The best available lathe should be used, the finishing cuts in the hole being made with a *single-pointed* boring-tool.

When the holes are *far apart* inside micrometer calipers, or end measuring-rods, may be used in connection with the disks. The latter are sometimes called *buttons*.

In cases some the first hole is required to be located with special accuracy from a planed edge. In such a case a micrometer depth gage may be used, or a metal parallel-block may be held against the edge and the first button adjusted so that a second button, or rod will just pass between it and the block. Other buttons may be located from the first and from other important points, and if each button is held in position until the work is adjusted for the corresponding hole, the long pulg will not be needed.

When one set of holes is to be bored in relation to other holes in a *lower parallel plane*, the buttons for the lower holes must be sufficiently long to compensate for the offset.

The system of locating holes by contact measurements is a very accurate one. The buttons and rods used with this system should be measured by a good micrometer caliper or by a measuring-machine.

Locating and Boring Holes on Boring Machines and on the Miller. —When no lathe of sufficient swing is available, holes in jigs, etc., may be located and bored in some other machine.

A paragraph in connection with Fig. 471 refers to the method of accurately locating holes on a horizontal borer by means of the feed screws and graduated dials. Some boring machines lack the graduated dials, but they are furnished with all universal millers. However, unless the feed screws are known to be reliable the measurements should be checked by some kind of micrometer or vernier instrument.

It will be understood that drills and reamers may be used in both

the boring machine and the miller. However, as indicated in a preceding paragraph, a *single-pointed* tool is more accurate for the *final* cuts. It would be permissible to use a reamer as a *sizer*, but it should be preceded by a single-pointed cutter (which may be held in a bar like that shown in Fig. 587), and the *minimum* allowance should be left for reaming.

When it is desirable to use an indicator like that shown in Fig. 355 in connection with "buttons" to "true up" work on the boring machine or on the miller, the indicator may be secured to a *special* arbor. The outer end of this arbor should be flat, or of some shape which would admit of the indicator being clamped to it. The inner ends should fit the machine-spindle in the usual manner. If the nose of the machine-spindle is *threaded to fit a chuck*, the indicator may be held in the chuck.

Further information respecting the accurate location of holes for jigs is given in Volume 26, page 788, and Volume 27, page 424, of the *American Machinist*.

THE NEW YORK PUBLIC LIBRARY
ASTOR LENOX AND TILDEN FOUNDATIONS

CHAPTER XXXII

MISCELLANEOUS MACHINE-SHOP METHODS

Lapping.—Lapping is a kind of grinding, and it is applied to such work as requires a higher degree of refinement than is possible by the ordinary process of the universal grinder. We sometimes lap a machine-shaft which is required to run at an extremely high speed, say 6000 revolutions per minute. Other machine details may be lapped when an exceptionally high degree of refinement is required, but the process is more commonly applied to measuring-tools, such as the collar- and plug-gages, etc. The process of lapping the collar- and plug-gages will illustrate the general principle. Having ground the collar, it is next placed on a freely fitting shaft and supported on the lathe-centers as in turning. We now apply oil and emery-dust to the shaft, and, causing the latter to rapidly revolve, we move the collar back and forth lengthwise of the shaft by hand, and at the same time revolve it slowly. The effect of this is to grind out the slight imperfections left by the universal grinder. The plug is lapped in the same manner, excepting that it revolves in the lathe the same as a shaft, a collar being used for the lap.

The laps above described are of the simplest and cheapest forms, namely, a plain shaft for the internal, and a collar for the external, lap, and both are made of cast iron; but when there is considerable lapping to be done it pays to make adjustable laps. For internal lapping the adjustment may be provided by cutting a narrow slot through the center of the shaft and using a headless set-screw to expand the shaft. This set-screw should be screwed into a tapped hole in one section of the shaft, its point pressing against the other section, as shown in Fig. 699. The slot should stop short of the ends of the shaft an inch or more, leaving the ends solid. For external lapping the lapping collar may be made with a slotted lug on one side with a screw in the lug by which to close the collar to compensate for wear. Fig. 700 shows this design.

The adjustable laps are generally made with lead strips extending lengthwise of the lap. These strips are formed by pouring melted lead

into recesses cut in the lap, the lead being trimmed down to the surface of the lap. The object of the lead is to hold the emery, which becomes imbedded in the lead. Large or long laps are sometimes made by casting a lead sleeve or collar on a tapering shaft. This sleeve is turned in the lathe the required size, and when worn too small the sleeve is enlarged by driving in the tapering shaft. A groove is cut lengthwise of the shaft. This groove is filled with lead in casting, and serves as a key to keep the sleeve from turning on the shaft. This form is shown in

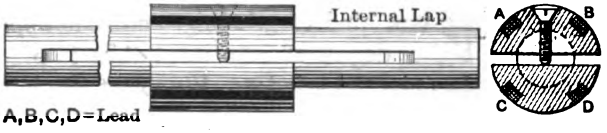

FIG. 699.

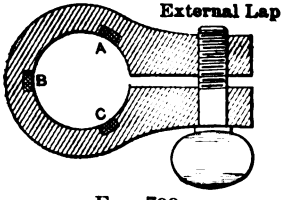

FIG. 700.

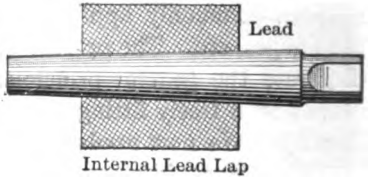

FIG. 701.

Fig. 701. Great care is necessary in lapping holes to prevent the lap making the hole large at the ends. To avoid this the laps are sometimes made slightly convex.

Grinding Valves, Joints, etc.—Lapping is sometimes used in making steam- and water-tight joints, but in such cases it is generally called *grinding*. Conical valves, flat-seated valves, etc., are sometimes fitted in this way. The process, however, is not so much used in this line of work as formerly. A machine has been designed which does this work so accurately as to obviate in many cases the necessity for the grinding.

If a lapped or ground joint is wanted in such a case as the cylinder-head on a steam-engine, the head is so turned as to leave a *narrow circular strip* for grinding. This strip is first scraped as nearly true as practicable, and then emery and oil are applied and the head rotated backward and forward until the surface is true. During this grinding process the surface should be frequently examined, and care should be taken to avoid getting emery on the low spots.

Shrink-fits.—The ordinary method of securing gears, pulleys, etc., to shafts is by means of key, set-screw, or pin. In some lines of machinery, however, shrink-fits and force-fits are used. The tires of locomotive driving-wheels are shrunk on, and the common car-wheels are usually forced on by hydraulic pressure. The tire is usually turned about .001″ per inch of diameter smaller than the driving-wheel proper. (The latter is called *wheel-center*.) The tire is then expanded by heat until large enough to slip over the wheel-center. Having properly placed the tire on the wheel-center it is next cooled off, which causes it to contract and tightly grip the wheel-center. The allowance of .001″ per inch of diameter, although slightly less than allowed by some railroads, is a very convenient and doubtless a very satisfactory rule for tires as well as other large work, but for diameters 12″ and less the formula $\frac{\text{Diameter of shaft}}{1000} + .001''$ is proposed as likely to give better results.

The following table of shrinkage allowances was copied from one of the leading mechanical journals (name of journal lost):

Size in Inches.	Allowance for Shrinkage.
2 inches and under	$\frac{1}{100}$ inch or less
2 to 4	$\frac{1}{100}$
4 to 6	$\frac{1}{64}$
6 to 9	$\frac{3}{128}$
9 to 12	$\frac{1}{32}$
12 to 18	$\frac{3}{64}$
18 to 24	$\frac{1}{20}$
24 to 35	$\frac{1}{18}$
35 to 45	$\frac{1}{16}$
45 to 55	$\frac{1}{14}$
55 to 65	$\frac{1}{12}$

This table gives a greater allowance than the formula, but such practice is doubtful. Any rule that may be adopted should be used with discrimination; for it is obvious that a light cast-iron ring will not stand the strain that might be safe for a heavy steel ring. The hole is usually made standard size, the allowance being made on the shaft.

In shrinking on such work as collars and shaft-couplings, the enveloping piece should be heated from the outside rather than through the hole. If heated from the inside first the hole will, in some cases, be made temporarily smaller, and the shaft will not at first enter. Or if the shaft be forced in, it is likely to be an unsatisfactory fit later when the heat has uniformly penetrated the outside piece and expanded it.

It is important to cool the enveloping piece as quickly as practicable, or keep the shaft cool; otherwise the heat may penetrate and expand the shaft. This might stretch the outside piece. If for any reason it is necessary to remove the shaft from some piece whieh has been shrunk on it, great care is necessary to keep the shaft cool while heating the outside piece. If both are heated both will be expanded.

Bands are sometimes shrunk on hubs of pulleys, gears, etc., to strengthen them. When both surfaces are smooth and true the allowance made by the formula is about right. But it often happens that neither band nor hub is machined. In such a case we cannot measure so accurately, but by measuring the hub in different places and taking as nearly as possible the average diameter we need not err greatly from the allowance recommended.

Force-fits.—By force-fit is meant the fit made by forcing a shaft into a wheel or other part by *hydraulic or other pressure.* The data respecting force-fits is not so satisfactory as that relating to shrink-fits. The tightness of the fit is usually designated by the pressure required to force the shaft into the hole. In the best practice the pressure for this purpose varies between six and nine tons per inch of diameter, according to the smoothness or roughness of shaft and hole. If, for instance, in forcing an axle into a car-wheel, the pressure indicated on the gage is considerably less than the minimum above given, the car-wheel is rejected; if much greater than the maximum, the axle is taken to the lathe and reduced in diameter.

The allowance for the force-fit is seldom indicated in terms of the diameter. The amount is in many factories left to the judgment of the mechanic. If required to give the allowance in terms of the shaft diameter, the formula $\frac{\text{Diameter of shaft}}{1000} + .0015''$ up to $12''$ would be not far from correct, assuming smooth surfaces for both shaft and hole, and hub about twice the diameter of shaft.

In some shops the shaft is turned rough, forming a kind of thread. With this method the shaft does not need to be so exact as to diameter, as the rough surface when but slightly excessive in diameter will be cut away by the enveloping piece while it is being pressed on the shaft.

In making shrink- or force-fits, especially if the enveloping piece be frail, care should be taken that the stress does not exceed the elastic limit of the outside part. But considering that both shaft and enveloping piece are compressed to a slight extent, it is believed that the allowance recommended in the preceding formulas will give satis-

factory results when the hub conforms to the above proportions. If the hub be much weaker, the constant in the above formula for force-fits might be changed to .0005″. For further information on this subject, together with diagrams of allowances for driving-fits, running-fits, and limit-gages, see the data-sheet issued in connection with the engineering edition of "Machinery" for August, 1903, and "The American Machinist" for August 6, 1903.

Formulas for force-fits, shrink-fits, and drive-fits, given in the above issue of "Machinery," are as follows:

$$\text{Force-fits, } \frac{A}{1000} = 2D + .5;$$

$$\text{Shrink-fits, } \frac{A}{1000} = {}^{17}/_{16}D + .5;$$

$$\text{Drive-fits, } \frac{A}{1000} = {}^{1}/_{2}D + .5;$$

where A = allowance in thousandths of an inch and D = nominal diameter of fit. It will be seen that the formula for shrink-fits agrees very nearly with the one proposed in this work; but the formula for force-fits gives much greater values, and probably subjects the enveloping part to a considerable initial tension.

The article in "The American Machinist" is by Mr. John Riddell. He provides for four different cases, varying with the material used and the class of work, as follows:

Nominal Diameter.	Minimum.	Maximum.
2 in.	.0005	.0015
4 "	.00075	.00275
6 "	.001	.0035
8 "	.001	.0045
10 "	.001	.00525
12 "	.001	.00575

The maximum allowances in this table are for the heaviest force-fits and also for shrink-fits. It will be noticed that there is a wide difference between Mr. Riddell's allowances and those quoted from "Machinery." Different writers have been quoted on this subject to emphasize what was indicated above, namely, that these formulas respecting force-fits and shrink-fits, like many other mechanical formulas, should be used with judgment and discrimination.

Machines Used in Making Force-fits.— In factories where a great deal of this kind of work is done hydraulic machines are used. These are furnished with gages which register the amount of pressure. When such expensive machines cannot be afforded a screw-press may be used for the purpose. However, the screw-press has very low efficiency and it is not very satisfactory for forcing shafts above, say, 5″.

Balancing Pulleys.—All machine rotating parts which run at considerable speeds should be balanced. That is to say, the weight of the material of which the rotating piece is composed should be distributed symmetrically with respect to the axis on which the piece revolves. Take, for instance, a common pulley; if the rim on one side be heavier than on the side diametrically opposite, the centrifugal force will be greater on the heavy side and this will tend to cause vibration of the shaft.

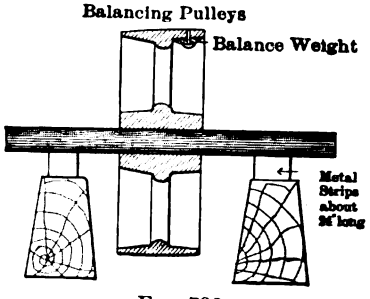

FIG. 702.

Pulleys are not ordinarily in a balanced condition when the lathe work is finished. The method of balancing them for ordinary speed is as follows: Insert a closely fitting arbor in the pulley and place the whole upon two straight strips of metal which have been carefully leveled on suitable supports, as shown in Fig. 702. When thus arranged the arbor will roll with the pulley until the heavy side of the latter stops at the bottom. The pulley should now be weighted with putty or clay on the inner side of the rim until it will stop in any position. Having marked the exact point where the putty was placed, a hole about $^5/_{16}$″ diameter is drilled for the rivet at that point and then countersunk on the outside of the rim.

For the balancing weights button-shaped blocks of iron of different sizes are used. One of these equaling in weight the putty is riveted to the pulley, the rivet being filed flush with the outside of the rim. If the pulley is to be held by set-screws, these should be in place before the pulley is balanced. If it is to be keyed, an arbor with key-seat and key should be used in balancing, or the difference made by keyway and key should be estimated.

A pulley balanced by the above method is said to be in "standing balance," and this is the method used in all but exceptional cases. A little consideration, however, will show that it is not exact; for while the

method enables us to find the heavy side of the pulley, it does not indicate the position of the heavy part lengthwise the pulley. For pulleys more than, say, 12" face, and running above 4000 feet peripheral speed per minute, it may be necessary to locate the counterbalance in the same plane at right angles to the arbor axis as the heavy part. There is no simple method of determining this position.* The Defiance Machine Company, of Defiance, Ohio, make a machine for the purpose, but persons who cannot afford to purchase such a machine use various cut-and-try methods. Such methods may be best explained in the classroom. Pulleys are sometimes balanced more accurately by turning the hub on the outside, and rim on inside as well as outside.

Balancing Cutter-heads.—Cutter-heads (for wood-working machinery) which run at high velocities usually require to be balanced with extreme accuracy. Not only are the heads machined very carefully, but bolts, washers, and knives on opposite sides are delicately weighed to insure an equal distribution of centrifugal force. When complete the cutter-head and all its attachments must be given a final test, and if found out of balance the correction may be made by drilling or otherwise cutting metal from the head.

Balancing Emery-wheels.—In balancing an emery-wheel, the nuts, collars, etc., should be truly turned in the lathe. The emery-wheel and arbor complete † should then be tested, and if found out of balance the correction may be made by drilling into the collars. If but slightly out of balance, holes cut in the gaskets between collar and emery-wheel will answer the purpose. Some manufacturers make flat-bottom holes on the inner side of the collar-flanges. When so made the correction for balancing may be made by filling in these holes on the light side.

It may be remarked in this connection that an improperly mounted emery-wheel is a *dangerous piece of machinery*. The wheel should not be forced on the arbor, but should fit freely, and rubber or other soft gaskets should be placed between the wheel and the collars on both sides. *The wheel should generally run not faster than recommended by the manufacturer.* As a further precaution wheels of greater diameter than about $5\frac{1}{2}$" should be covered with suitable guards.

---

* Comprehensive articles on "Balancing at High Speeds" are given in "Machinery" for Sept., 1907, and in the "American Machinist" of Feb. 22, 1906, and Jan. 2, 1908. The first refers to cream separator bowls, and the other articles, while covering general principles, have special reference to steam turbines.

† To get the best results the detachable parts should be balanced separately before the complete arbor is tested.

CHAPTER XXXIII

TABLES, RECIPES, ETC.

Table No. 1.

THE PRINCIPAL WIRE-GAGES USED IN THE UNITED STATES.

Number of Wire-gage.	American or Brown & Sharpe.	Birmingham or Stubs' Wire.	Washburn & Moen Mfg. Co., Worcester, Mass.	Imperial Wire-gage.	Stubs' Steel Wire.	U. S. Standard for Plate.	Number of Wire-gage.
000000	.....	.....	.....	.464	.....	.46875	000000
00000	.....	.....	.....	.432	.....	.4375	00000
0000	.46	.454	.3938	.400	.....	.40625	0000
000	.40964	.425	.3625	.372	.....	.375	000
00	.3648	.38	.3310	.348	.....	.34375	00
0	.32486	.34	.3065	.324	.....	.3125	0
1	.2893	.3	.2830	.300	.227	.28125	1
2	.25763	.284	.2625	.276	.219	.265625	2
3	.22942	.259	.2437	.252	.212	.25	3
4	.20431	.238	.2253	.232	.207	.234375	4
5	.18194	.22	.2070	.212	.204	.21875	5
6	.16202	.203	.1920	.192	.201	.203125	6
7	.14428	.18	.1770	.176	.199	.1875	7
8	.12849	.165	.1620	.160	.197	.171875	8
9	.11443	.148	.1483	.144	.194	.15625	9
10	.10189	.134	.1350	.128	.191	.140625	10
11	.090742	.12	.1205	.116	.188	.125	11
12	.080808	.109	.1055	.104	.185	.109375	12
13	.071961	.095	.0915	.092	.182	.09375	13
14	.064084	.083	.0800	.080	.180	.078125	14
15	.057068	.072	.0720	.072	.178	.0703125	15
16	.05082	.065	.0625	.064	.175	.0625	16
17	.045257	.058	.0510	.056	.172	.05625	17
18	.040303	.049	.0475	.048	.168	.05	18
19	.03589	.042	.0410	.040	.164	.04375	19
20	.031961	.035	.0348	.036	.161	.0375	20
21	.028462	.032	.03175	.032	.157	.034375	21
22	.025347	.028	.0286	.028	.155	.03125	22
23	.022571	.025	.0258	.024	.153	.028125	23
24	.0201	.022	.0230	.022	.151	.025	24
25	.0179	.02	.0204	.020	.148	.021875	25
26	.01594	.018	.0181	.018	.146	.01875	26
27	.014195	.016	.0173	.0164	.143	.0171875	27
28	.012641	.014	.0162	.0149	.139	.015625	28
29	.011257	.013	.0150	.0136	.134	.0140625	29
30	.010025	.012	.0140	.0124	.127	.0125	30
31	.008928	.01	.0132	.0116	.120	.0109375	31
32	.00795	.009	.0128	.0108	.115	.01015625	32
33	.00708	.008	.0118	.0100	.112	.009375	33
34	.006304	.007	.0104	.0092	.110	.00859375	34
35	.005614	.005	.0095	.0084	.108	.0078125	35
36	.005	.004	.0090	.0076	.106	.00703125	36
37	.004453	.....	.....	.0068	.103	.006640625	37
38	.003965	.....	.....	.0060	.101	.00625	38
39	.003531	.....	.....	.0052	.099	.....	39
40	.003144	.....	.....	.0048	.097	.....	40

TABLE NO. 2.

GAGE NUMBERS AND DIAMETERS FOR TWIST-DRILLS.

Gage Number.	Diameter, Inches.	Gage Number.	Diameter, Inches.	Gage Number.	Diameter, Inches.	Gage Number.	Diameter, Inches.
1	.2280	21	.1590	41	.0960	61	.0390
2	.2210	22	.1570	42	.0935	62	.0380
3	.2130	23	.1540	43	.0890	63	.0370
4	.2090	24	.1520	44	.0860	64	.0360
5	.2055	25	.1495	45	.0820	65	.0350
6	.2040	26	.1470	46	.0810	66	.0330
7	.2010	27	.1440	47	.0785	67	.0320
8	.1990	28	.1405	48	.0760	68	.0310
9	.1960	29	.1360	49	.0730	69	.02925
10	.1935	30	.1285	50	.0700	70	.0280
11	.1910	31	.1200	51	.0670	71	.0260
12	.1890	32	.1160	52	.0635	72	.0250
13	.1850	33	.1130	53	.0595	73	.0240
14	.1820	34	.1110	54	.0550	74	.0225
15	.1800	35	.1100	55	.0520	75	.0210
16	.1770	36	.1065	56	.0465	76	.0200
17	.1730	37	.1040	57	.0430	77	.0180
18	.1695	38	.1015	58	.0420	78	.0160
19	.1660	39	.0995	59	.0410	79	.0145
20	.1610	40	.0980	60	.0400	80	.0135

TABLE No. 3.

GAGE NUMBERS AND DIAMETERS FOR WOOD AND MACHINE-SCREWS.

Number of Screw.	Diameter, Inches.	Number of Screw	Diameter, Inches.	Number of Screw.	Diameter, Inches.	Number of Screw.	Diameter, Inches.
000	.03152	12	.21576	25	.38684	38	.55792
00	.04468	13	.22892	26	.40000	39	.57108
0	.05784	14	.24208	27	.41316	40	.58424
1	.07100	15	.25524	28	.42632	41	.59740
2	.08416	16	.26840	29	.43948	42	.61056
3	.09732	17	.28156	30	.45264	43	.62372
4	.11048	18	.29472	31	.46580	44	.63688
5	.12364	19	.30788	32	.47896	45	.65004
6	.13680	20	.32104	33	.49212	46	.66320
7	.14996	21	.33420	34	.50528	47	.67636
8	.16312	22	.34736	35	.51844	48	.68952
9	.17628	23	.36052	36	.53160	49	.70268
10	.18944	24	.37368	37	.54476	50	.71584
11	.20260						

Small screws, especially sizes below $\frac{1}{4}''$, are made in either "fractional" or screw-gage diameters. The United States standard is generally disregarded in small screws, with respect to both the pitch and the shape.

The diameters corresponding to the tap numbers in Table No. 5 are the same as the diameters given for the "No. of screw" in Table No. 3. The drill numbers given in Tables No. 4 and No. 5 refer to Table No 2. The latter table is sometimes used for measuring wire also. The tap-drill sizes allow what is considered sufficient clearance above the root of the thread. When a full thread is required, the diameter of the drill may be calculated from Table No. 8 and the accompanying formula.

TABLE No. 4.

TAP-DRILLS FOR V THREADS.

Diameter of Tap, Inches.	Threads per Inch.	Drill Number.	Diameter of Tap, Inches.	Threads per Inch.	Drill Number.
3/32	48	50	5/32	30	33
	52	50		32	32
	54	49		36	31
	56	49		40	30
7/64	32	50	11/64	32	30
	36	49		36	29
	40	47		40	28
	48	44			
1/8	36	43	3/16	24	29
	40	42		28	28
	42	41		30	27
	48	39		32	26
9/64	30	41	7/32	24	18
	32	40		28	17
	36	37		30	16
	40	34		32	15

TABLE No. 5.

TAP-DRILLS FOR MACHINE-SCREW TAPS.

Number of Tap.	Threads per Inch.	Drill Number.	Number of Tap.	Threads per Inch.	Drill Number.
2	48	48	10	24	26
	56	46		28	24
	64	45		30	23
				32	21
3	40	48	11	24	20
	48	47		28	19
	56	45		30	18
4	32	45	12	20	21
	36	43		22	19
	40	42		24	19
5	30	41	13	20	17
	32	40		24	15
	36	38			
	40	36	14	20	14
6	30	39		22	13
	32	37		24	11
	36	35	15	18	12
	40	33		20	10
7	28	32		24	7
	30	31	16	16	10
	32	30		18	7
8	24	31		20	5
	30	30		24	1
	32	29	17	16	7
9	24	29		18	4
	28	27		20	2
	30	26	18	16	2
	32	24		18	1

TABLE No. 6.

TAP-DRILL SIZES FOR U. S. STANDARD THREAD.

Diameter of Tap, Inches.	Number of Threads per Inch.	Diameter at Root, Inches.	Diameter of Drill, Inches.	Difference between Drill Size and Root of Thread.
1/4	20	.185	11/64	.018
5/16	18	.2403	1/4	.010
3/8	16	.2936	5/16	.0189
7/16	14	.3447	11/32	.0146
1/2	13	.4001	27/64	.0218
9/16	12	.4542	29/64	.0145
5/8	11	.5069	17/32	.0244
3/4	10	.6201	41/64	.0201
7/8	9	.7307	3/4	.0193
1	8	.8376	53/64	.0218
1 1/8	7	.9394	33/32	.0294
1 1/4	7	1.0644	1 5/32	.0294
1 3/8	6	1.1585	1 9/32	.0290
1 1/2	6	1.2835	1 13/32	.0290
1 5/8	5 1/2	1.3888	1 47/64	.0321
1 3/4	5	1.4902	1 33/32	.0411
1 7/8	5	1.6152	1 33/32	.0411
2	4 1/2	1.7113	1 3/4	.0387

TABLE No. 7.

TAP-DRILL SIZES FOR PIPE-TAPS.

Diameter of Tap, Inches.	Number of Threads per Inch.	Diameter of Drill, Inches.	Diameter of Tap, Inches.	Number of Threads per Inch.	Diameter of Drill, Inches.
1/8	27	11/32	1 1/4	11 1/2	1 1/2
1/4	18	7/16	1 1/2	11 1/2	1 47/64
3/8	18	11/16	2	11 1/2	2 3/16
1/2	14	47/64	2 1/2	8	2 5/8
3/4	14	59/64	3	8	3 1/4
1	11 1/2	1 5/16			

Reamers should be used for the larger pipe-taps.

TABLE No. 8.

CONSTANTS FOR FINDING DIAMETER AT BOTTOM OF THREAD.

(Used by permission of the Pratt and Whitney Co.)

Threads per Inch.	U. S. Standard Constant.	"V" Thread Constant.	Threads per Inch.	U. S. Standard Constant.	"V" Thread Constant.
64	.02029	.02706	16	.08118	.10825
60	.02165	.02887	14	.09278	.12357
56	.02319	.03093	13	.09992	.13323
50	.02598	.03464	12	.10825	.14433
48	.02706	.03608	11	.11809	.15745
44	.02952	.03936	10	.12990	.17320
40	.03247	.04330	9	.14433	.19244
36	.03608	.04811	8	.16237	.21650
32	.04059	.05412	7	.18555	.24742
30	.04330	.05773	6	.21650	.28866
28	.04639	.06185	5½	.23618	.31490
26	.04996	.06661	5	.25980	.34650
24	.05412	.07216	4½	.28866	.38488
22	.05904	.07872	4	.32475	.43300
20	.06495	.08660	3½	.37114	.49485
18	.07216	.09622	3	.43333	.57733

C = constant for number of threads per inch;
D = outside diameter;
D' = diameter at bottom of thread.

$$D' = D - C.$$

EXAMPLE.—Given outside diameter of U. S. standard screw-thread, 2 inches; 4½ threads per inch; find diameter at bottom of thread. $D = 2$ inches; for 4½ threads U. S. standard, constant, $C = .2886$; then diameter at bottom of thread, $D' = 2 - .2886 = 1.7114$ inches.

A FEW USEFUL RECIPES AND FACTS.

(Nos. 1, 2, 3, 4, 6, and 9 are used by permission of Morse Twist Drill and Machine Co.)

1. **To Harden Cast Iron.**—Many times it is very convenient to make an article of cast iron that needs to be finished, and which should be very hard. Cast iron can be hardened as easily as steel, and to such a degree of hardness that a file will not touch it. Take one-half pint vitriol, one peck common salt, one-half pound saltpetre, two pounds alum, one-quarter pound prussiate potash, one-quarter pound cyanide potash;* dissolve in ten gallons of soft water. Be sure that all the articles are dissolved. Heat the iron to a cherry red, and dip it in the solution. If the article needs to be very hard, heat and dip the second and even the third time.

2. **Annealing Cast Iron.**—To anneal cast iron, heat it in a slow charcoal-fire to a dull-red heat; then cover it over about two inches with fine charcoal; then

* Cyanide potash is a deadly poison; even the fumes are poisonous.

cover with ashes. Let it lay until cold. Hard cast iron can be softened enough in this way to be filed or drilled. This process will be exceedingly useful to iron founders, as by this means there will be a great saving of expense in making new patterns.

3. **To make a Casting of Precisely the same Size of a Broken Casting without the Original Patterns.**—Put the pieces of broken casting together and mould them, and cast from this mould. Then anneal it as above described; it will expand to the original size of the pattern, and there remain in that expanded state.

4. **How to Anneal Brass or Copper.**—In working brass and copper, it will become hard, and if hammered to any great extent will split. To prevent cracking or splitting, the piece must be heated to a dull-red heat and plunged in cold water; this will soften it so it can be worked easily. Be careful not to heat brass too hot, or it will fall to pieces. The piece must be annealed frequently during the process of hammering.

5. **Case-hardening.**—Steel, wrought iron, etc., may be case-hardened as follows: Polish the piece, heat to bright red, and rub with prussiate of potash. Cool the article in air to a dull red and then immerse in water.

6. **Weight of Castings.**—If you have a pattern made of soft pine, put together without nails; an iron casting made from it will weigh sixteen pounds to every pound of the pattern. If the casting is of brass, it will weigh eighteen pounds to every pound of the pattern.

7. A cubic inch of cast iron weighs .2607 pound; wrought iron (bars), .2817 pound; steel (cast) .2839 pound; brass (cast) .2930 pound; brass (rolled) .2972 pound.

8. **Determining Diameters of Round Stock for Hexagon- and Square-head Bolts.**—For hexagon, the distance across the flats divided by .866 = diameter of stock. For square-head bolts, the distance across flats divided by .7071 = diameter of stock.

9. **To Sharpen Reamers.**—Hand reamers, when dull through wear, should be stoned first on the face of the flutes then on top of the flutes. The stone should be always held perfectly flat with the face and clearance that the original shape of the flutes may be preserved. End-cutting reamers should be first turned on centers with a wheel, and then recleared to insure reaming a hole the same size of reamer.

QUESTIONS ON THE TEXT

CHAPTER I

1. What is the value of the English yard in terms of the meter?
2. What is the difference between common calipers and thread-calipers?
3. In fitting a shaft to a gear or pulley what precautions are necessary in adjusting the calipers?
4. What is a Vernier caliper?
5. What two systems of graduation are used for machine-shop Vernier calipers?
6. Give brief descriptions of common micrometer-calipers and screw-thread micrometer-calipers. How would you adjust the former to .603"? In using the latter to measure a U. S. standard screw, what value must be added to the reading of the instrument in order to obtain the outside diameter of the screw? What value must be added to obtain the outside diameter of the V thread?
7. Describe an inside micrometer-gage, a micrometer depth-gage.
8. Describe a method of compensating for errors in screws.
9. Describe a common form of caliper-gage.
10. Describe ordinary collar- and plug-gages.
11. Describe external- and internal-thread gages.
12. What is the purpose of a limit-gage? Describe an adjustable limit-gage.
13. Sketch and describe the thread- and center-gage.
14. What is a thread pitch-gage?
15. What is a templet?
16. Describe the common surface-gage and tell how it is used. What special form of surface-gage may be used in describing circles, and how is it used?
17. Describe a common wire-gage, a twist-drill gage.
18. Describe a key-seat rule.
19. Is the English wire-gage the same as the British Imperial?
20. What wire-gage is used almost exclusively in America for electrical purposes?
21. What are the distinguishing features of the Edison wire-gage?

22. Is there a standard gage in the U. S. for the diameters of wood- and machine-screws?

23. What precautions are necessary in ordering wire and sheet and plate metal to avoid delay?

24. What is the most accurate and reliable method of measuring and specifying the size of wire?

25. How may the combination square be used for measuring tapers?

CHAPTER II

26. What are the three most common forms of hammer?

27. What is the meaning of the word peen?

28. How would you shape a crank-pin, or any large pin, to facilitate riveting?

29. What methods are used for straightening shafts?

30. What is the effect of machining a peened surface?

31. Describe two methods of straightening long bars of cast iron.

32. How may the peening principle be applied, for enlarging piston-rings? Explain how this principle may be used in fitting connecting-rod straps.

CHAPTER III

33. What are the names of the two chisels most generally used in the machine-shop?

34. To about what cutting angle should a chisel be ground to cut (*a*) cast iron, (*b*) steel, (*c*) Babbitt?

35. What is a center-punch and for what purpose is it used?

36. Describe a key-drift. What is a pin-drift?

37. In chipping, what precaution is necessary upon approaching the edge of the work? What other precaution is necessary to insure smooth chipping?

38. What precaution is necessary in grinding chisels and other tools to prevent drawing the temper?

39. In general, when should the chisel be used and when not?

CHAPTER IV

40. Into what three general classes may files be divided?

41. What advantages are derived from making a file with a convex surface?

42. Distinguish between cross-filing and draw-filing, and explain the purpose of each.

43. What is a safe-edge file? What is its purpose?

44. What is meant by pinning, and how may it be partly prevented?

45. What files are most commonly used in the machine-shop?

46. Describe the process of finishing a chipped surface by filing

47. How may very broad surfaces be filed?
48. How may curved surfaces be filed without producing flat spots?
49. What two principles are to be observed in filing lathe work?
50. What source of danger is to be guarded against in filing rotating work?
51. How is emery-cloth applied to lathe work to polish it?
52. What is a polishing-clamp?

CHAPTER V

53. What is a surface-plate, and how is it used?
54. Describe a typical scraper.
55. How may chattering of a scraper be obviated?
56. What precautions against wasting time should be observed when scraping flat surfaces?
57. What form of scraper may be used in fitting a bearing to its shaft?
58. Describe a method of giving an ornamental finish with the scraper? With emery-dust and a pine stick?
59. How is the scraper applied to work in the lathe, and in general, for what purpose?
60. What is a "graver" ?
61. Is it safe to use files and scrapers without handles on lathe work?

CHAPTER VI

62. Name several common forms of vises.
63. How is provision made in the swivel-vise for swinging work in a horizontal plane?
64. How may a vise be arranged to clamp tapering work?
65. How is a vise arranged for threading pipes, and where should it be placed?
66. Describe the hand-vise, the pin-vise.
67. What are the advantages in having vise-jaws detachable?
68. What materials are used for vise-clamps, and when are vise-clamps used?
69. Describe a good design of hack-saw.

CHAPTER VII

70. What is the definition of the term drill?
71. Describe the ratchet-drill; for what is it used?
72. Describe the breast-drill.
73. Describe the Fifield drilling attachment, and tell how it is operated.
74. Describe the portable drilling-machine, and tell how it is used.
75. What are the essential features of a sensitive-drill?
76. How may a variable-speed friction-drive be applied to a sensitive-drill?

77. Give a general description of a back-geared drill.

78. What is the principle and what the purpose of the back gears?

79. What is feed-gearing? how applied to the drill?

80. What is an automatic stop, and what advantage has it?

81. How is the head of a drill-press usually adjusted as to height?

82. What adjustments are provided for the table of an ordinary drill-press?

83. What is a radial drill? What advantages has it over the common drill-press?

84. Give a general description of the main driving mechanism of the radial drill shown in Figs. 121 to 125.

85. Describe the feed-gearing of the foregoing machine.

86. Describe the depth-gage.

87. What is the difference between the universal radial drill and the plain radial drill?

88. What is the object of the tilting-table shown in Fig. 132?

89. Give general descriptions of the suspension-drill, the multispindle-drill, and the turret-drill.

90. Explain the necessity and use of the high-speed attachment for large radial drills.

91. How is a hole started in work to be drilled?

92. Describe a method of holding work in drilling-machines (*a*) by bolts and straps, (*b*) by use of the angle-plate, (*c*) by use of the drill-vise.

93. Describe the universal vise as used for drilling.

94. How are V blocks used in connection with the drilling-machine?

95. Describe a method of machining hubs in the drill.

96. What is the most accurate method of adjusting work for drilling?

CHAPTER VIII

97. Describe the twist-drill, defining longitudinal clearance, body clearance, and lip clearance.

98. What are the essentials of a correctly ground drill?

99. What is the effect of grinding a drill eccentric?

100. How does the farmer-drill differ from the twist-drill? To what kind of work is it adapted?

101. Describe a flat-drill. Under what circumstances would a flat-drill be used?

102. Describe (*a*) the pin-drill or counterbore, (*b*) the tit-drill, (*c*) the bottoming-drill.

103. What is the purpose of the oil-tube drill?

104. Give approximate speed formulas for drilling (*a*) machine steel, (*b*) cast iron, (*c*) brass.

105. About how much faster may drills be run when made of high-speed steel than when made of ordinary tool steel?

106. Give approximate rates of feed for drills.

CHAPTER IX

107. How are taper-shank drills driven in the drill-press? What is the approximate taper of the "Morse Standard"?

108. Describe a cheap device for driving broken-tang drills.

109. How are straight-shank drills driven?

110. How is the drill-socket made for use in the lathe? By what other term is it known?

111. How may the taper-shank drill be driven by a drill-chuck?

CHAPTER X

112. What is the purpose of a reamer? What would be the effect of allowing too much metal for the reamer to cut?

113. Describe the solid fluted reamer. What is the object of making reamers with spiral flutes?

114. What is the essential difference between the rose reamer and the fluted reamer?

115. What is the advantage of making a reamer in the shell form?

116. Describe an adjustable reamer with detachable blades. What is the object of the adjustable reamer?

117. Describe a good form of chucking reamer. What is the object of the chucking reamer?

118. What is a wood-bit as used in the machine-shop?

119. Can the taper-reamer be used in the rose form?

120. What is the object of notching the cutting edges of a reamer?

121. What governs the number of cutting edges in a reamer?

122. What is the effect of too much body clearance in a reamer? What is the object of spacing the teeth of a reamer unequally?

123. For what purposes may square reamers be used? Describe a cheap method of making square reamers.

124. What precautions should be observed in hardening reamers?

CHAPTER XI

125. What are the distinguishing features between the hand-lathe and the engine-lathe?

126. Describe the principal elements in connection with the head-stock of the engine-lathe?

127. Describe the tail-stock.

128. Describe the thread-cutting mechanism.

129. Is the feed-belt reliable for thread-cutting?

130. Describe the feed mechanism.

131. How may the apron-gearing and lead-screw be designed so as to admit of the lead-screw being used as a feed-rod?

132. Describe the screw-cutting mechanism of the lathe shown in Figs. 218 to 222.

133. Describe the operation of the feed-clutches.

134. Explain the operation of the apron-gearing of Fig. 223.

135. What is meant by "back-gear ratio"? How is this ratio computed?

136. Explain the principle of the spur-gear reversing mechanism as illustrated in Fig. 225.

137. Describe the head-stock gearing shown in Figs. 227 and 228.

138. Explain in detail (*a*) the raise-and-fall rest, (*b*) the plain rest, (*c*) the compound rest, (*d*) the elevating tool-rest, (*e*) the open-side tool-rest, (*f*) the three-tool shafting-rest.

139. What are the distinguishing features of (*a*) the pulley-lathe, (*b*) the pit-lathe, (*c*) the gap-lathe?

140. What is the meaning of the term "swing"? How may the "swing" of a common lathe be increased?

141. How is the cutting speed of a lathe designated? In general what considerations govern the cutting speed? How many revolutions of a 3-inch shaft would be required to give a cutting speed of 35 ft. per minute? What would be the cutting speed of a 3-inch shaft when making 38.22 revolutions per minute?

142. Name some of the brands of high-speed steel in use. About what is the maximum cutting speed when using the best high-speed steel?

143. What considerations govern the feed in lathe work? How may the rotary measure shown in Fig. 239 be used to measure cutting speed?

144. What is the advantage of a hollow spindle in a lathe?

145. Describe a method of testing the alinement of a lathe-spindle.

CHAPTER XII

146. What are the distinguishing features of the turret-lathe?

147. Describe the plain screw-machine.

148. Explain the chucking principle illustrated in Figs. 243 and 244.

149. Describe a method of making filister-head screws in the screw-machine.

150. To what class of work is the monitor lathe adapted?

151. Describe the characteristic features of the machines shown in Figs. 248 to 252.

152. What is the principle difference between the machine illustrated in Fig. 252 and that shown in Fig. 259?

153. Briefly describe the operations illustrated in Figs. 261 to 266.

154. Give three different methods of using turrets in connection with the engine-lathe.

155. What is a box tool? What is a knee tool?.

156. What is a forming-tool, and to what class of work is it adapted?

CHAPTER XIII

157. What are the names of a common set of lathe-tools?

158. What are the advantages of the tool-holder system of lathe-tools?

159. Describe a boring system in which round bars with inserted cutters are used. What advantages has this system as compared with that in which forged boring-tools are used?

160. Give one or more cases in which a multiple-edge tool may be used with advanatge.

161. What is the advantage of the backward offset in planer-tools? How is the same principle employed in lathe-tools?

162. What is the meaning of the term "rake" as applied to machine-shop tools? What is the effect of "rake"?

163. Does changing the height of a tool change its angle of front rake?

164. What is the effect on the side clearance of changing the longitudinal feed?

165. How do tools for brass differ from other tools with respect to rake?

166. Why do planer-tools require less rake than lathe-tools?

167. What metals are machined in connection with lubricants?

CHAPTER XIV

168. What is the correct angle for the point of a lathe-center?

169. Why are hardened centers more reliable than soft centers?

170. Describe a machine used for grinding centers. How may the centers be so shaped as to lessen the work of grinding?

171. What precautions in using lathe-centers are necessary to prevent eccentric work?

172. About what are suitable proportions for work centers? Why is it important to drill the center sufficiently deep to give clearance to the point of the lathe-center?

173. Describe the tools and methods employed in locating centers in work.

174. Describe a machine designed especially for centering. Refer back to the chapter on drilling-machines and explain how work may be supported in the sensitive-drill while the centers are being drilled.

CHAPTER XV

175. What is the ordinary method of driving work between the lathe-centers? How should threaded work be driven? What is a bolt-dog?

176. Describe one or more methods of driving work between centers which allow the work to be machined its full length without being reversed?

177. Describe three chucks ordinarily used for lathe work.

178. Describe one or more special chucks. How could a chuck be made without jaws for holding packing-rings? What is a wood-chuck?

179. What precautions are necessary when gripping frail work in the ordinary chuck?

180. What methods may be used for testing the concentricity of chuck work?

CHAPTER XVI

181. What is a lathe arbor or mandrel and how is it used?

182. Describe the plain arbor, giving its taper per foot.

183. What is the construction of the self-tightening arbor? What objection is urged against it?

184. Describe the expansion arbor. How is it used?

185. Describe an arbor used for different sizes of tapering holes.

186. Describe three kinds of nut arbors and tell which is best and why.

187. What special arbor method is sometimes used in machining armed pulleys?

188. How may arbors be forced into work without injuring the arbor?

189. Describe one design of arbor-press.

CHAPTER XVII

190. Describe the various steps necessary in machining a collar, as explained on pages 254 to 257.

191. Describe the operations necessary for machining the shaft, pages 257 to 258.

192. How should a side-tool be ground and set to give the best finish on the end of a shaft?

193. What are some of the causes of chattering mentioned in this chapter, and what are the remedies?

194. Describe the operations necessary for machining a bevel-gear blank. How may the beveled face be turned without a compound rest?

195. What precautions are necessary to avoid mistakes in adjusting the compound rest?

196. What is a taper attachment?

197. Describe the method of turning tapers (*a*) by taper attachment, (*b*) by tail-stock adjustment. Give an approximate rule for adjusting the tail-stock for tapers.

198. Describe the steady rest and cathead. For what purposes are these devices used?

199. In what cases is a follower-rest used?

200. Describe a special method of machining a cone pulley with several tools cutting simultaneously. Explain the construction of the chuck shown in Fig. 397.

201. Explain the operation of the ball-turning rest illustrated in Figs. 398 and 399. Describe other methods of turning balls.

202. Explain the general principle of turning curved surfaces with guiding forms.

CHAPTER XVIII

203. Is the feed-belt reliable for thread-cutting?

204. What is meant by the term *lead* as applied to screw-threads?

205. What is the distinction between *lead* and *pitch*?

206. With stud and spindle 1 to 1 and 6 threads per inch on the lead-screw, compute change-gears for 6, 12, and 13 threads (*all single threads*).

207. What is a translating-gear, and why is it used?

208. With a lead-screw of 4-inch turns, compute change-gears (simple gearing) for cutting a thread with 2 millimeters lead.

209. Explain a method of cutting fractional threads with approximate change-gears.

210. Describe a method of setting V and U. S. standard thread-tools for straight-screw cutting.

211. Describe the same for cutting tapered screws.

212. What is a thread stop-gage, and how is it used?

213. Explain how to catch the thread without reversing the lathe.

214. How may multiple threads be spaced in the lathe?

CHAPTER XIX

215. What is the difference between V and U. S. standard screw-threads? Which is the stronger? Which is the more durable?

216. Describe the Acme thread.

217. In starting a new plant, what screw-threads should be adopted for general purposes?

218. What number of threads per inch different from the U. S. standard is often used for ½″ screws?

219. What is meant by the nominal diameter of a pipe? By the actual diameter?

220. Where is the extra metal added to "extra-strong" and "double-extra-strong" pipe?

221. Describe the set of standard machinists' hand-taps.

222. Describe the pulley-tap.

223. What taper is used for pipe-taps?

224. What is "hob"? What is a stay-bolt tap?

225. Describe the process of making a solid die.

226. Describe one form of adjustable die.

227. What method is suggested for retapping old dies?

228. Describe the "water-anneal" process.

229. What is meant by backing off a tap?

230. Describe a common form of adjustable tap-wrench.

231. Describe a simple bolt-cutting machine.

232. Describe in general terms the die-head of a bolt-cutting machine.

CHAPTER XX

233. Name and describe three types of boring-bar.

234. What methods are used in securing the cutters in a boring-bar?

235. What is the advantage of double cutters?

236. Explain the action of the star-feed as applied to sliding-head boring-bars.

237. How may the star-feed be applied to lateral feeding?

238. State and explain three methods of boring tapered holes with the boring-bar.

239. How may an engine-cylinder be rebored without removing it from the engine-bed?

240. What conditions may cause chattering in the use of the boring-bar, and how is chattering remedied?

241. Describe a satisfactory cutter for roughing cuts, for finishing cuts.

CHAPTER XXI

242. For what purposes are horizontal boring- and drilling-machines used?

243. Describe a facing attachment used on the horizontal boring-machine.

244. How may a horizontal boring-machine be adapted for milling?

245. What distinguishes a base-boring machine from the ordinary boring-machine?

246. For what class of work are portable boring-machines used?

247. What is a crank-boring machine?

CHAPTER XXII

248. What are the characteristic features of the vertical boring- and turning-mill? What are its advantages for turning large fly-wheels?

249. Describe a special boring-machine for car-wheels.

250. Can the turret-head be advantageously applied to vertical boring- and turning-mills?

251. What can you say about the adaptation of vertical boring- and turning-mills to thread-cutting operations?

CHAPTER XXIII

252. Give a general description of the metal planer.

253. What is the construction of the friction feed-disk commonly used on the planer?

254. How is the cross-head automatically fed?

255. Describe the system of gearing that drives the planer-table.

256. How is the table reversed?

257. Are planers always equipped with a positive drive? What advantage is claimed for the "second-belt" drive referred to in this chapter?

258. What conditions as to strength must exist in a satisfactory open-side planer? Describe a device sometimes used on the ordinary planer for planing wide work.

259. Describe the mechanism driving the ram in a common crank-shaper.

260. How is the length of stroke regulated in the crank-shaper?

261. Describe one method of effecting quick return in the planer.

262. What is the difference between a geared shaper and a crank-shaper?

263. What is a traverse shaper?

264. What is the object of swiveling the tool-apron of the planer?

265. Describe a simple tool-lifter for under-cut planing.

266. What precaution should be observed in adjusting the planer cross-rail?

267. How may work be held on the planer-table without a vise? (Give two methods).

268. What is an angle-plate?

269. What are V blocks? What are straps?

270. What precaution is necessary in blocking up work on the planer-table? What is the result of neglecting this precaution?

271. What are planer-centers and how are they used?

272. Describe a concave attachment for the shaper, a convex attachment.

273. Explain the "former principle" as used on the planer for planing curved work.

274. Describe a method of cutting rack-teeth on the planer.

275. Describe a grinding attachemnt as used on the planer and shaper.

276. How may the alinement of a planer-bed be tested?

CHAPTER XXIV

277. How does the slotting-machine differ from the shaper?

278. To what line of work is the slotter especially adapted?

279. Describe a common slotting-machine tool.

280. Describe a rotating tool-holder for use on the slotting-machine.

CHAPTER XXV

281. What is a key? a key-seat? 505

282. Describe a simple key-seating machine. What advantage has this machine as compared with the slotting-machine?

283. Describe a key-seating attachment for the drill-press.

CHAPTER XXVI

284. What are the essential features of a milling-machine?

285. Outline the feed-gearing of a Universal milling-machine.

286. What is a plain milling-machine?

287. What advantage has the planer type milling-machine?

288. Describe the vertical milling-machine.

289. How does the milling-machine compare with the planer as to range of work and economy?

290. What is slab-milling?

291. Name and describe some common forms of milling-cutters.

292. What is meant by gang-milling?

293. What two processes are necessary in milling a large dove-tail slot from the solid?

294. Give a method for holding two shafts parallel. for milling key-ways.

295. Name and describe a cheap form of cutter used in emergencies.

296. Describe a rack milling attachment for the milling-machine, a slotting attachment. Name some other attachments.

297. What is the dividing-head and for what is it used?

298. What is the difference between simple and compound indexing?

299. What is differential indexing?

300. With change-gears of 32, 40, 64, and 72 teeth determine the arrangement necessary for a spiral of 36″ lead with pitch of screw=$\frac{1}{4}$″ and worm-wheel with 40 teeth.

301. Describe a taper attachment for use on the milling-machine.

302. How may abrupt angles be milled?

303. What is the circular pitch of a gear? the diametral pitch?

304. What method may be used to mill gears too large to be held on a horizontal arbor?

305. What is a worm? a worm-wheel? What tools are used in cutting worm-wheels?

306. State in their order the processes for cutting a bevel-gear.

307. Why is the common method of cutting bevel-gears theoretically incorrect?

308. What considerations govern the cutting speed of milling-cutters?

CHAPTER XXVII

309. What is the advantage of automatic gear-cutting machines?

310. What is the principle of the gear-shaper?

311. How are gear-shaper cutters ground?

312. What is the principle involved in the Gleason gear-planer?

CHAPTER XXVIII

313. How is emery graded as to coarseness?

314. What are the principal abrasives used for the manufacture of grinding-wheels?

315. For what class of work is the universal grinding-machine used?

316. What are the principal causes of eccentricity in cylindrical grinding?

317. What is the effect of wearing of the emery-wheel in grinding a parallel shaft? How may this effect be obviated?

318. How is the back-rest applied to the universal grinder?

319. What provision is made for grinding abrupt tapers in the universal grinder?

320. How may disk work be ground in the universal grinder?

321. Describe a convenient draw-in chuck for disk-grinding.

322. What is a surface-grinding machine?

323. What precaution is necessary in clamping work to the surface-grinder table?

324. What two forms of emery-wheel truer are used?

325. How may a grinding attachment be applied to the lathe?

326. What speed is permissible for emery-wheels?

327. What considerations govern the width of face of the emery-wheel for machine grinding?

328. What considerations govern the traverse per revolution of the work in machine grinding?

329. What is glazing of emery-wheels? How may it be prevented?

330. What causes may produce chattering in cylindrical grinding?

331. What precautions are necessary in mounting an emery-wheel?

332. For what purpose is water used in cylindrical grinding?

333. What precautions should be observed to insure economy in the use of the grinder?

334. Mention some examples which indicate the wide range of machine grinding.

335. Does the abrasive become embedded in metal being ground?

CHAPTER XXIX

336. Name several kinds of wheels used in the polishing- and buffing-lathe.

337. How is emery applied to polishing-wheels?

338. Name several polishing materials and give the uses of each.

339. How may rag-wheels be cleaned?

CHAPTER XXX

340. What is a jig? What are the advantages of the jig?

341. What provision is made for keeping the guiding holes in jigs from wearing?

342. How may the cutting edges of drills and reamers be kept from touching the bushings in jigs?

343. For what purposes are jigs generally used in the planer and miller?

344. What is meant by machine nomenclature?

345. Describe a convenient system of machine nomenclature.

CHAPTER XXXI

346. What do you understand by the term "laying out"?

347. What are the essential requirements of a laying-out plate?

348. How would you proceed to locate the centers on a large shaft?

349. Describe a method of laying out on the end of a hollow flanged cylinder six holes equally spaced in a circle concentric with the body of the cylinder.

350. Describe the principal steps in laying out a bell-crank lever.

351. Briefly explain the principle of locating holes by contact measurements.

352. How could the Bath indicator be used in the boring machine and miller for locating holes?

CHAPTER XXXII

353. What is meant by lapping? Describe one form of adjustable lap.

354. What is a shrink-fit? Give a formula.

355. What precaution is necessary in shrinking on collars and shaft-couplings?

356. Where are force-fits used? About what allowance is made for force-fits?

357. Why is it necessary to balance pulleys and emery-wheels? How are they balanced?

INDEX

PAGE

Abrasive materials, designating 467
wheels, grading of 467
Adjusting work in the drilling-machine 110–111
Alundum 467
Angle of lathe-centers 224–225
Angle-plates, use of, in laying out work 516–517
, on planer 374
drilling-machine 106
horizontal boring-machines 330, 331, 336
vertical boring and turning mill 352
Angles, milling of abrupt 438–439
Annealing brass and copper 535
cast iron 534
steel 304
Arbor, self-tightening 247
Arbors, centers in 251, 253
, classification of 246
, expansion 248
for large work 250, 253
for tapering work 248
, instructions for use of, on the miller 454
, methods of forcing into work 250–253
, nut 248–250
, plain 246–247
Attachment, boring-tool, for lathes 213
, concave, for shapers 378–379
, convex, for shapers 379–380
, Fifield drilling 75–77
, grinding, for planers 384
shapers 385, 386
, high-speed, for drilling-machines 103–104
, key-seating, for drilling-machines 396
, rack-cutting, for miller 422–423
, rotary, for miller 419–424
, slotting, for miller 423
, taper, for lathes 170–264
miller 438
, vertical milling 422
, wide-angle spiral, for miller 421
Attachments, ball-turning, for lathes 274
, boring-machine facing 331–332
, grinding, for lathes 384, 480

PAGE
Back gearing 80–83, 92, 159–161, 400
Back rests, use of, in cylindrical grinding 477, 480
Balancing at high speed, reference to articles in technical papers on 527
cutter-heads 527
emery-wheels 527
pulleys 526–527
Ball-turning 273–276
Base-boring and drilling machines 334
Bath indicator 245, 268, 520
Bell center-punch 229–230
Bevel-gear generating machine, the Brown and Sharpe 466
planer, Bilgram's 466
, Gleason's 461–466
Bevel-gears, length of face 441, 451
, milling teeth of 447–451
, selecting cutters for 440, 441, 450–451
, turning 259–261
Bevel protractor, universal 26–28
Bilgram bevel-gear planer 466
Bits, wood, and holder 137–139
Black diamond for truing emery-wheels 488, 491
Blocking up centers on miller 444
Blue vitriol, use of, in laying out work 42, 511
Bolt-cutter 309–312
-dog 235
Bolts and nuts, milling of 436
Bond 467
Boring a steam-engine cylinder 315–317
Boring-, drilling-, and milling-machines, portable 340
Boring- and turning-mills, vertical, advantage of, in large work 342
, cutting threads on 355
, examples of work on 342–344, 349–353
, turret-heads for 354–355
Boring-bar cutters 314, 317, 320, 326
, causes of chattering of 326
, shapes of 326–327
, feeding by the lathe-gearing 321–322
laterally with star feed-device 322–323
longitudinally with star feed-device 319–320
, fixed head 317–319
, methods of driving 320–321
, sliding head 319–320
Boring-bars 314–327
Boring-machine, crank 341
, facing attachment for 331–332
, horizontal, description of typical 328
, milling work on 333–334
, rotary tables for 333
, work of 331–334
, special 340

PAGE
Boring-machines, securing cylinders on. 315–317, 338–340
, universal 340
Boring-mill tools. 351–352, 355
Boring taper holes with boring-bar. 324–325
Boring-tool attachment for lathes. 213
, feeding back and forth. 255
Box tools. 200–201
Brush-wheels. 499
Buffing and polishing. 497–500
Buttons for locating holes. 519

Caliper, hermaphrodite. 6, 250
, large micrometer. 10–11
, screw-thread micrometer. 13
Caliper-gages. 15–16
Calipers, double. 5
, friction-joint. 5
, micrometer. 9
, setting. 8, 238
, spring-joint. 4
, thread. 6–8
, vernier. 8–9
, graduations on micrometer. 10
Carborundum. 467, 492
Carbondite. 467
Car-wheels, special boring-mill for. 353
Case-hardening, receipts for. 535
Cast iron, to harden. 534
Cat-head. 267–268
Center-drills and reamers. 230–252
Center-gage. 18, 283–285
Centering-machine. 230–231
Centering-tool, lathe. 259
Centering work with special accuracy. 231
Center-punch. 41, 512
, Bell. 229–230
, turning and knurling of. 261
Center-square. 229
Centers, angle of. 224–225
, blocking-up, on miller. 444
, female. 228
, half. 258
, methods of making, in work. 228–232
, method of grinding. 225–226
, pipe. 228
, precautions as to. 225–227
, proportions of, in work. 228–229
, square. 227
, taper and angle of. 224–225
Change-gears, approximate, for fractional threads. 283
for thread-cutting, computing. 279–283
Chasers, die. 311–313
Chattering (foot-note). 255–256

PAGE

Chattering in cylindrical grinding 492
planer work 376
with boring-bar 214, 326-327
Chipping, precautions to avoid breaking edge of work 42–43
, smooth 42
Chisel, cape 38, 40
, difficulty with, when corners wear tapering 38
, cow-mouth 41
, diamond-point 40, 105
, draw 41, 105
, flat 37
, oil-groove 40–41
, side 40–41
Chisels, grinding of 37–38, 43
, when to use 43
Chuck, machining back plate of 238
, use of, on miller 439
, universal 239
Chuck-jaws for face-plate 242
Chucks, combination 240–241
, draw-in 180, 439, 482–483
, drill 128
, home-made 243, 273
, independent 237–238
, magnetic 485
, valve 242
with slip jaws 241
, wood 244
Chuck-work, testing concentricity of 244–245
Compound indexing on miller 430–431
Compound rest of lathe, precautions as to angle of 260–261
Concave attachment for shaper 378–379
Cone-of-gears feed 83, 92, 157, 350, 401
Cone-pulley, special method of machining 272–273
Connecting-rod strap, peening a 34–35
Convex attachment for shaper 379
Corundum 467, 495
Crank, machining a small 269–270
Cross-rail adjustment, planer 372
Cutter, bolt 309
Cutter-head, balancing of 527
Cutter-heads 314, 317, 318, 319, 322
Cutters, boring-bar 314, 317, 320, 326
, direction of rotation of milling 451
, epicycloidal system of gear-tooth 440
, feed of work to, in milling 453
for shaping large curves, cheap method of making 218
, involute system of gear-tooth 439
, milling, various shapes and names of 407–410, 417
, selecting gear tooth 439, 440–441, 450–451
, single and double, compared 317

PAGE
Depth-gage, micrometer 13, 15, 519
Diameters of stock for hexagon- and square-head bolts 535
Diametral pitch 440
Diamond emery-truer 488
Die, geometric screw-cutting 205
Die, making a solid 300–302
Die-head for bolt-cutting machine 312–313
Dies, adjustable 302
, clearance-holes of 301
, chamfering 301, 313
, heel-clearance of 300, 302
, lands of 300
, retapping old 302
, solid 298, 300, 302
, spring 205
, square 298, 300
, tempering 307
, thread 298–303
Differential indexing 431–434
Direction of rotation of milling cutters 451
Disk-grinding 481
Dividers, universal 5–6
Dividing head 424–430
Dog, bolt 235
, driving work by a common lathe 233
on centers without a 236
for taper work 234
threaded work 234
taper milling 437–438
, using a double-end 233
Dovetail slot, milling a 415
Double caliper 5
Draw-chisel 41, 105
Drift, definition of a 42
, key 42
, pin 42
Drill (machine), adjusting work on, by use of tram 110–111
, back-geared 79
, automatic stop 84
, feed-gearing 83–84
, hand-feed 84
, head 84
, quick-return 84
, table adjustment 84–86
, back gear of 80–83
, breast 75–76
, character of work on 104
, holding work on 105–108
, round work on 107
, horizontal drilling and boring 328–341
, portable 77–78
, protecting finished work on 106
, radial, arrangement of driving-shafts 87, 91–92

PAGE
Drill (machine), depth gage for. 90–91
, radial, feed gearing. 89, 92
, general description. 86
, hand-feed and quick return. 89–90
, reversing mechanism. 87–89
, tilting-table for. 95–96
, universal 94–95
, ratchet. 74–75
, starting a hole. 104–105
, turning hubs on. 108–110
, use of angle-plates on. 106
, upright, with revolving table. 96, 98
, vises for. 106, 107, 108
Drill and reamer sockets, special, for jigwork. 504
Drill, broken-tang split sleeve for. 130–131
, a cheap device for driving. 127
Drill-chucks. 128, 129
Drill-grinder and surface-grinder combined. 486
Drill-holder, the lathe-dog as a. 130
Drilling, a hazardous practice in 131
Drilling attachment, Fifield. 75–77
, high-speed. 103–104
, chisels used for correcting eccentricity in starting. 105
, deep. 121–122
Drilling hard metal. 124
oil-holes in pulley-hubs. 108, 109
Drilling, lubricants used for. 123
, starting the hole. 104–105
Drills, bottoming. 120
, effect of errors in grinding. 116
, definition and classification of. 112
, feeds of. 93–94, 124
, flat. 118–119
, gage for twist. 20, 23
grinding. 114–116
, grinding-machines for. 470, 486
, high-speed steel for. 123–124
, oil-tube. 121–122
, pin, or counterbores. 119–120
, slotting. 120–121
, speed of. 123
, straight-shank twist. 117
, straight-way or farmer. 117–118
, three-groove and four-groove twist. 117
, tit. 120
twist. 112–117, 121–122
, clearances of. 113
, nomenclature. 112–113
Drills (machines), multispindle. 96, 99–101
, radial, important principle in design of. 93
, motor-driven. 94
, sensitive. 78–79

PAGE
Drills (machines), sensitive friction 79–80
, suspension 95
, turret 99–103
Drill-shanks, table of Morse taper 130
Drill-sockets 125–127
, abuse of 125
or holders, lathe 128–129
, positive-grip 125
Drive fits 520
Driving work on centers without a dog 236

Eccentricity, causes of, in grinding 493
lathe-work 227
Effect of errors in grinding drills 116
Elevating tool-rest on lathe 167
Emergency milling 417
Emery, designating 467
Emery grinder, portable 489
Emery-stick 500
Emery-wheels, balancing of 527
, beveling the edge of 491
, combination 467, 495
, danger of 490, 527
, dressers for 487–488
, frail 490
, glazing of 491, 492, 495
, grading of 467
, mounting of 489, 527
, recessed collars to prevent the bursting of 490
, selecting 493
, sizing power of 492, 495
, speed of 490
, to prepare for finishing cuts 491
, truing 487–489, 491
, width of face of, for cylindrical grinding 490, 491
End measuring-rod 519
Engine-lathe, turrets for 198–199
Engine-lathe work 254–293
Epicycloidal system of gear-tooth cutters 440
Etching fluid, relieving taps by 307
Expansion-chuck 243
Expansion-reamers 136
Extension head for planers 362
External and internal thread-gages 17–18
Extra heads on planers 363

Feed, automatic chuck and roller on turret lathe 190–191
Feed-clutches on the lathe 158–159
Feed, cone-of-gears, mounted 83, 92, 156, 350, 401
Feed-disk for planer 356
Feed for miller 453

PAGE
Feed-gearing in cross-head of planer 356–359
, miller 401–402
, shaper 366
Feed-mechanism of lathes 149, 156, 159, 161–162
Feed of drills, rate of 93, 94, 124
Feeds, rate of, for lathe-work 173
Fellow's gear-shaper 458–461
File-brush and file-card 51
File sections and corresponding names 44–46
File should not be lifted on return-strokes 59
Filing a rectangular recess 57
broad surfaces 55
curved surfaces 56–57
Filing, changing direction of strokes of 54
, moisture causes glazing 52
Filing lathe-work 57–58
, danger of clothing being caught 58
, dangerous without file-handle 67
, speed of the work 58
Files, care, of, cases in which new files should not be used 59
, classification with respect to shape 48
, coarse and bastard, used on heavy and coarse work 52
, convexity increases the "bite" 49
compensates for rocking motion 49
, cross-filing and draw-filing 50–51
, curving for special work 57
, dead-smooth for extra fine finish 52
, distinction between the terms double-cut and second-cut 48
, efficiency of hand-cut 49
, general classification 44–45
, grades and names 47
, grasping 49–50
, increment-cut versus hand-cut 49
most used in machine-shop 52
, pinning, prevention of 51–52
, pitch of teeth varies with length of 46
, safe edge 51
, stub and holder 57
, tang and heel, meaning of 44
, uses of hand, pillar, mill, equalling, and round 52–5
Finishing a flat surface 54
cuts in lathe work 211, 258
tools, angles of rake and clearance of 222
Flat drills 118
Floating-shank reamer 355
Fly-cutters 417
Force-fits 524–525
Former, use of, for machining curved shapes 277, 379–382
Forming tools in screw-machines 205
Friction-disk mechanism for feeding milling-machine table 402

PAGE
Gage, adjustable limit. . . . 17
, caliper. . . . 15–16
, decimal. . . . 24–25
, jobber's drill. . . . 23
, micrometer, inside. . . . 13
, depth. . . . 13
, theory of the Edison wire. . . . 24
, thread and center. . . . 18, 283–285
, thread-pitch. . . . 18
Gage, U. S. standard thread. . . . 19
, wire and twist-drill. . . . 20–24
, wood- and machine-screw. . . . 24
Gages, collar and plug. . . . 16
, distinction between Stubs' wire and Stubs' steel wire. . . . 23
drill and Stubs' steel wire. . . . 23
, external and internal thread. . . . 17
, limit. . . . 16–17
, to prevent wasting time. . . . 28
, remedy for confusion in use of wire. . . . 24
, seasoning steel for caliper and collar and plug. . . . 29
, surface. . . . 20
, table of wire 528
twist-drill. . . . 529
wood- and machine-screws. . . . 530
Gang-cutters for gear-teeth. . . . 458
Gang milling. . . . 412
Gap-lathe. . . . 172
Gas-engine frame, milling a. . . . 413–415
Gear-cutter, Gould and Eberhardt automatic. . . . 455–457
Gear-cutting on planer and shaper. . . . 382
miller. . . . 439–444, 447–451
, care as to lost motion of screws. . . . 442, 450
Geared-head lathes. . . . 163–164
, Gleason. . . . 461–466
Gear-shaper, Fellow's. . . . 458–461
Gears, bevel, cutters for. . . . 440–441, 450–451
, change, computing. . . . 279–283
, circular pitch of. . . . 440
, sliding-key. . . . 83–84, 92
, triple, for lathe. . . . 163
Gear-tooth cutters, selecting. . . . 439, 440–441, 450–451
Geometric screw-cutting die-head. . . . 205
Glazing of emery-wheels. . . . 491, 492, 495
Graver made of square file. . . . 67
Grinder, combined drill and surface. . . . 486
, draw-in chuck for. . . . 482–483
, economy in use of the. . . . 476, 484, 494, 495
, floor, with surface attachment 486–487
, portable 489
Grinders for lathe- and planer-tools. . . . 468–470
Grinding agricultural machinery. . . . 495

PAGE

Grinding allowances 494
attachments for lathes 384, 489
planer and shaper 384, 385
automobile details 495
babbitt, copper, etc., metal does not adhere to wheel 496
brass—abrasive material does not become embedded in the metal.. 496
cone pulleys 495
ends of collars and bushings 481
parallel shafts 477–479
rough shafts 494
rubber, it does not adhere to wheel 496
tapers 480–481
valves and joints 522
work, roughing and finishing cuts—lathe dispensed with..476, 484, 494, 495
Grinding-machine for reamers, milling cutters, etc 470–471
Grinding-machine, care of 494
, oiling the 494
, plain 471, 473
, precautions as to belts 494
, preventing rusting of the 493
, surface 484–485
, universal 471–475
, wide range of the 495
Grinding, causes of chattering in 492
, classification of 468
, disk 481–482
, finishing cuts 491–492, 495
, importance of true wheels 491
, internal 483–484
, popular fallacies concerning 496
, selecting wheels for 493
, sizing power of wheels 492, 495
, use of water in cylindrical 493
, wheels should cut without appreciable pressure in machine 493
, workspeed and rate of wheel-traverses 490–493, 495

Hack-saw 73
Half-center 258
Hammer, peen of 31
, striking two blows for one with the 32
, proper method of using the 31
Hammers, common forms of 30
, fitting the handles of 31
, material of 30
, soft 35
, weight of 30
Hand-lathes 146
Hardening cast iron 519
reamers 144
Hard metal, drilling 124
Hermaphrodite caliper 6, 230

PAGE
Hexagon-head bolt, diameter of stock for 535
High-speed attachment for drilling-machines. 103–104
lathes. 163–165
steel. 123, 173, 453
Hobs, hobbing worm-wheels. 445–447
Holding work on planer by pins and stops. 373–374
Hollow spindle, advantage of, in lathes. 175
Horizontal boring- and drilling-machines 328–340

Ideal condition of lathe-centers. 224
Inch-turns, meaning of. 279
Indicator, bath. 245, 268, 520
Index centers, plain. 444
Indexing, compound. 430–431
, differential. 431–434
mechanism of Gould & Eberhardt gear-cutter. 457
, simple. 430
Inside micrometer caliper. 15, 519
Interchangeable system of manufacturing 501
Internal grinding. 483–484, 494
Involute system of cutters. 439

Jig for drilling ball-handles. 506
drilling tail-stock clamp-levers. 506
cylinder-heads. 501–502
steam-chest cover. 502
Jig-making, an excellent example of. 502–506
, leaving space between bushing and work. 509
Jigs 501–509
as used on planer and miller. 507–508
, importance of, for interchangeable work. 501
Jigs, locating holes in. 331, 504, 518–520
, special drill and reamer sockets for. 504–505
Key-drift. 42
Key-seating attachment for upright drill. 396
machines. 395–396
Key-seat rule 24–25, 270
Key-seats and key-fitting. 394–395
Keyways, milling. 416–417
Knurling-tools. 262–263

Lands of dies. 300
Lapping centers. 135, 136, 253
Laps and lapping 521–522
Lathe, advantage of offset tail-stock. 176
, advantages of hollow spindle. 175
, compound rest of. 148, 165–166, 260–262, 286
, cutting speeds of the. 172–173
, engine, general description with names of details. 147–149
, feeds of the. 173
for turning locomotive driving-wheels 172

PAGE
Lathe, gap ... 172
, increasing the swing of, meaning of word 'swing' ... 172, 173–175
, instrument for measuring cutting speed of the ... 173
, pit ... 171
, primitive form of the ... 145–146
, pulley ... 170–171
, purchasing a ... 175
, reverse gears under head stock ... 151
, screw-cutting mechanism of ... 149
, special, for high-speed steel ... 164–165
, testing alinement of a ... 176–177
, tool-room ... 172
, triple gear ... 163
, use of screw as feed-rod ... 149
Lathe- and work-centers ... 224–232
Lathe-bed easily twisted ... 176
Lathe-centers, grinder for ... 226
, importance of keeping them true ... 225–227
, shaping the point to lessen grinding ... 226
, taper of, angle of point ... 224–225
Lathe change-gears, mounted ... 156–158
Lathe mandrels or arbors ... 246–253
Lathe slide-rest ... 146
Lathes, analysis of back gear of ... 159–161
, bevel-gear reverse in apron of ... 158–159
, classification of ... 145
, elevating tool-rest for ... 167
, feed-clutches of ... 158
, feed-mechanism of ... 149
, geared head ... 163–164
, hand ... 146–147
Lathes, high-speed ... 163–165
, open-side tool-rest for ... 167
, plain rest for ... 165
, raise-and-fall rest for ... 165
, spur-gear reversing mechanism of ... 161–162
, taper attachemnt for ... 170
, three-tool shafting-rest for ... 168
, turret, see Turret machines.
Lathe-tools (see also Tools) ... 208–223
, self-hardening and high-speed steel for ... 173
Lathe-work, driving of ... 233–245
, engine ... 254–293
Laying out a bell-crank ... 515–517
small crank ... 270
cylindrical work ... 230, 513–515
machined surfaces ... 41, 511
, significance of the term ... 511
work ... 511–520
by a mating piece ... 517
Laying-out plates ... 512–513

PAGE
Lead of threads, meaning. . . . 278
Locating holes in jigs, etc., by contact measurements 518–520
on horizontal boring-machine and on universal miller. . . . 331, 449, 520
Lubricants for turning and drilling. . . . 223

Machine nomenclature. . . . 509–510
Machine, nut-tapping. . . . 313
Machines, drilling. . . . 74–111
, key-seating. . . . 394–396
Machining a collar 254
flanged cylinder. . . . 338
small crank. . . . 269
Magnetic chucks. . . . 485
Mandrels, lathe (see also Arbors). . . . 246–253
Measuring-machine, Sweet's. . . . 11
, the Pratt and Whitney. . . . 13
Metre, the national prototype. . . . 2
, value in English measure. . . . 2, 282
Metric and fractional threads, computing change gears for. . . . 282
Metric system, when legalized by Congress. . . . 2
Micrometer calipers 9–13
, large. . . . 10–11
depth gage. . . . 13
disks and measurements. . . . 383, 437
gage, inside. . . . 13
screw-thread caliper. . . . 13
Mill, hollow 202
, straddle. . . . 436–437
Miller arbors, instruction for use of. . . . 454
attachments, see Attachments.
Miller centers, blocking up for large work. . . . 443–444
Miller, boring on. . . . 417
, dividing head. . . . 424, 428–430
, feed-gearing. . . . 401–402
, holding work on, without special fixtures 417–418
, open side. . . . 404
, planer-type. . . . 404, 405
, plain. . . . 402–404
, use of chucks on the. . . . 439
, vertical, work on. . . . 418–419
, vertical. . . . 405–407
Milling-cutters, computing change-gears for cutting spirals. . . . 434–436
, direction of rotation. . . . 451–453
, feed of work to. . . . 453
, miscellaneous. . . . 407–410, 417
Milling abrupt angles. . . . 438–439
bolts and nuts. . . . 436–437
dove tail slot. . . . 415–416
gas-engine frame. . . . 413–415
gear-teeth, bevel-gears. . . . 447–450

PAGE
Milling gear-teeth, common method theoretically incorrect for bevel-gears 450–451
, precautions as to lost motion or back-lash of feed-screws 442, 450
, special method for large gears. 443–444
, spur-gears. 441–443
, worm-gears. 445–447
keyways. 416–417
parallel pieces of different widths with same cutters. 420
rack-teeth. 451
Milling, emergency. 417
, gang. 412, 458
, slab. 407–411
, slot. 412–413
steel castings. 415
, taper, special dog for. 437–438
Milling-machine driving-gear. 398–400
vises. 420–421
Milling-machines and planers compared. 407
Milling-machines, work, etc. 397–454
Morse tapers. 130, 224, 349

National prototype metre. 2
Nomenclature, system of machine. 509
, twist drill. 112
Nut-tapping machine. 313

Oil-tube drills. 121
Open-side miller. 404
planer. 362
Ornamental finish with emery and stick. 65

Paper weight, turning a. 271–272
Parallel blocks, adjustable 375–376
Peen, meaning of. 31
Peening a connecting-rod strap. 34–35
Peening, enlarging piston-ring by 35
, straightening shafts by 33–34
Pin-drift. 42
Pins for holding shaper and planer work. 373–374
Pipe, nominal and actual diameter of. 296
Pipe-threads, tap-drill sizes for. 531
Piston-ring chuck. 243
Pitch of gear-teeth 440
thread, meaning of. 278
Pit-lathes. 171
Planer and shaper, difference between. 364
Planer-bed, testing of. 387
Planer-table, care of. 385
, movement of. 359–361
tools. 211, 214, 215, 217–219, 376–377
, backward offset of, to prevent chattering. 217–219, 376
work. 372–384

PAGE
Planer, blocking up work on the 375
, feed-disk of 356–358
, feed-gearing in cross-head of 356–359
, gear-cutting on 382
, general description 356
, open-side 362
, second belt-drive for 361–362
, swiveling the tool-slide and tool-apron of 370–371
Planers, adjusting the cross-rail 372
, extension-head for 362–363
, extra heads for 363-364
, ratio of table reverse 361, 362
, tool-lifter for 371
, vises for 372–373
Planing curved work 377–388
irregular forms 379–382
, shape of work not a duplicate of former 380–382
rack teeth 382–383
Planing, precaution as to pressure of straps 375
Pliers 73
Polishing- and buffing-lathe 497
Polishing brass, steel, nickel, etc 498–500
Polishing-clamps 58–59
Polishing in the lathe 58
Polishing materials, crocus, rouge, pumice, emery, etc 499–500
Polishing, ornamental, with emery and stick 65
Polishing-wheels, brush, wooden, walrus, rag, grease, etc 498–500
, speed of 500
Presses, arbor 253
Prick-punch 41–42, 511
Protecting finished work from set-screw of lathe-dog 234
Protecting finished work on drilling-machine 106
thread in screw-cutting 234–235
Protractor, universal bevel 26
Pulleys, balancing of 526–527

Questions on the text 537–550
Quick return of drill-spindle 84, 89
planer-table 361, 362
shaper-ram 367
Rack-teeth, planing 382–383
Rake of brass tools 222
lathe tools 219
Reamers 132–144
and drills compared 132
, adjustable 136
, allowance for wear and stoning 143
, blanks, turning off decarbonized surface 144
, body clearance of 142
not milled to extreme edge 142
, causes of chattering of 142

PAGE
Reamers, chucking 132, 137
, considerations governing number of cutting-edges 140
, definition and classification of 132
, eccentric relief and flat relief 142
, expansion 136
, floating shank 355
, hand 132–133, 136, 139–140
, hardening of 144
, lapping centers of 135
, miscellaneous 143
, object of unequally spacing teeth 143
, resetting rose and fluted 135
, rose and fluted, compared 134
, roughing taper 140
, shapes of cutting edges of 140
, shell and arbors for 134–135
, solid fluted 133
, special sockets for 499
, spiral 133
, standard, allowance for cutting 133, 134
, tables of cutters for 141
, taper of rose and fluted 133–134
, tapering 139
, to sharpen 535–536
Receipts for hardening, case-hardening, annealing, etc 534–535
Renold silent chain 343
Rest, compound 148, 165, 166, 260–262, 286
, elevating-tool 167
, follower 268–269
, open-side tool 167
Rest, plain 165
, raise-and-fall 165
, slide 146
, steady 231, 267
, three-tool shafting 168
Riveting, special method for large pins 32–33
Rotating tool-holder 393
Rule, hook 3
, key-seat 24–25
Rules, wood and steel 3

Scraper, double end 61–62
, causes of chattering in using 63, 66
, cheap steel not economical 61
for interior curves 63–64
, grasping the 62
, grinding and oil-stoning the 61, 67
, hooked form of 62
, ornamental work with 63
, precautions against drawing temper in grinding the 62–63

PAGE
Scraper, precautions against wasting time in use of the 63
, special form of, for broad surfaces 64
, typical 61
Scrapers, use of, in lathe-work 65–67
dangerous without handles 67
Scraping, importance of, in machine tools 61, 63
Scratch-gage 6, 512
Screw-cutting, see Thread-cutting.
Screws, compensating for errors in 12
, dog for 234–235
Screw-thread micrometer caliper 13
Screw-threads, taps, dies, etc 29–314
Scriber, shape of 512
Seasoning steel used for gages 29
Setting calipers 8, 238
thread-tools for straight and taper work 283–284
Shaft, turning a long slender 223
Shaper 364–372
, concave attachment for 378
, convex attachment for 379
, crank 364–367
, cutting gears on 382
, driving-gear of crank 366
, feed-gearing of 366
, Fellow's gear 458–461
, geared 368
, quick return in the crank 367
, ram movement on geared, and crank 368
ram, motion of 367
, stroke adjustment of the 367
, surface-grinding attachment for 385–386
, swiveling the tool-slide and tool-apron of the 370–371
, traverse 368–369
, tool-lifter for 371–372
, vises for 372–373
, work on 372
work, pins for holding 373–374
, variable-speed gearing for 368–370
Shrink fits, allowance for 518–520
Single and double threads 278–279
Slab-milling 407–411
Slide, cross, for turret-lathe 146
Slide-rest of lathe 146
Sliding-key gears 92
Slot-milling 412–413
Slotting-attachment for milling-machines 423
Slotting-machine, general description 388
, portable 389–391
, ram movement of 388
, rotary tool-holder for 393
, table movement of 388

PAGE
Slotting-machine tools ... 391–393
work ... 388–389
Spacing cutting-edges of reamers ... 143
numbers used with dividing head ... 432
of multiple threads ... 292
Special-gear machines ... 455–466
Speed for cutting in the lathe ... 172
of drills ... 123
emery-wheels ... 489–490
milling-cutters ... 453
Spirals, computing change-gears for cutting ... 434
, miller attachment for wide angle ... 421
Square, combination ... 26
, machinists' try ... 25
Square-head bolts, diameter of stock for ... 535
Standard set of lathe-tools ... 208
Standards of length ... 1–2
Star-feed mechanism ... 319, 322
Starting the hole in drilling ... 104
Steady rest ... 231, 267
Steel, annealing ... 304
, seasoning ... 29
, tempering ... 307
Steam-engine cylinders, boring ... 315–317
, reboring on engine-bed ... 325
Straddle mill ... 436
Straight-edge, definition of ... 60
Straightening a cast-iron bar ... 34
by dropping process ... 34
peening ... 33
Straightening by screw-press ... 33
Stubs' gages, distinction between Stubs' wire and Stubs' steel-wire gages ... 23
Surface-gages ... 20, 513–517
Surface-plate, design and care of ... 60
, object of, description ... 60
, using the ... 61
Suspension drilling-machines ... 95
Swing, meaning of, as applied to lathes ... 173–175

Table, tilting, for radial drill ... 95
Table of constants for diameter at root of V and U. S. standard threads ... 534
machine-screw gage diameters ... 530
Table of Morse tapers ... 130
tap-drill diameters for machine-screws ... 532
pipe ... 533
U. S. standard screws ... 533
V threads ... 531
twist-drill gage diameters ... 529
wire gages ... 528
Tail-stock, adjusting for taper work ... 263–264, 266
Taper attachments, errors in graduation ... 265

PAGE
Taper shaft, fitting to collar ... 265
turning by taper attachment ... 263–265
, examples of ... 258–263
on the flat turret-lathe ... 206–207
Tapering screws, setting thread-tool for ... 284
Tap, making a taper ... 303–306
lever or wrench ... 308
Tapping holes ... 308
steel, lard-oil and graphite for ... 308
Taps, backing off ... 306
, bottoming ... 298
, grooving ... 306
, machinist's hand ... 297–298
, machine ... 298, 299
, pipe ... 298, 299
, plug ... 297
, pulley ... 298, 299
, relieving ... 307
by etching fluid ... 307
, stay-bolt ... 298, 300
, taper ... 297
, tempering ... 307
, threading ... 305, 306
Templets ... 19, 42
Threading large work ... 308–309
Threads, acme ... 295
, pipe ... 296–297
, screw, some practical considerations concerning ... 294–296
, single and double ... 278–279
, square ... 295
, U. S. standard and V ... 294–295
, variations from U. S. standard ... 296
, Whitworth ... 294
Thread-cutting, catching the threads ... 289
, computing change-gears for ... 279–283
in the engine-lathe ... 278–293
, principles of ... 278
turret-machines ... 204
, left-hand worm ... 290
, precautions in connection with ... 285–286
, spacing multiple threads ... 292–293
, square threads ... 287–289
, stop-gage for ... 286–287
, theoretical difficulties ... 291
, use of compound rest for ... 286
Thread-calipers ... 6
Thread-gage ... 18, 283
Thread-pitch gage ... 18
Thread-tool and holder ... 215
, Rivett-Dock holder ... 215–217
Thread-tools, setting ... 283–284, 285

PAGE
Thread-tools, side clearance of, for square thread 291-292
Tool, knurling 262, 263
Tool-holder plan 212-219
Tool-lifter for planer 371
Tools, advantage of backward offset in planer 217-219
, a standard set for lathe and their names 208
, box 200-201
, changing height changes rake 220-221
for brass 211-212, 223
chilled iron 223
turret-lathes 200-207
, gang-planer 214-215
, grinder for 468-469
, multiple-edge 217-218
, planer 211-215, 223, 376
, , with angular adjustment 214
, rake and clearance of lathe 219-223
, slotting-machine 391
, spring, for lathe-work 219
, turret-forming 205
, uses of various lathe 210-212
Translating-gear, use of, in thread-cutting 282
Truing emery-wheels 487-489, 491
Turning a long slender shaft 223
Turning angular face of bevel-gear without compound rest 261
curved shapes 273-277
Turret-machines, a plain screw-machine 178-179
, automatic screw-machine 182-183
, distinguishing features 178
, flat turret-lathe 186-191
, automatic chuck and roller feed 190-191
, cross-slide 190
, die-carriage 191
, examples of work done on the improved machine 198
, improved design 191-198
, taper-turner and former 207
, Gisholt chucking-lathe 183-185
, hollow hexagon lathe 185-186
, monitor lathe 183
, tools for 200-207
, work done with forming-tools 205
Turrets used on engine-lathes 198-199
Universal back-rest for grinding-machine 480
boring-machine 340
chucks 239
Universal dividers 5-6
grinding-machine and work 471, 473-484, 489-495
radial drill 94-95

V blocks 107, 374, 413, 416, 418, 513-514
V's, drawn tool-steel for lathes 174

PAGE
V threads 294
Valve and joint grinding 522
Valve-chucks 242
Variable-speed shaper-gear 368
Vertical boring- and turning-mills, examples of work 343, 344, 352, 353
miller 405, 418
Vernier calipers 8
graduations on micrometer calipers 10
Vise, combination pipe 70
for taper work (swivel jaw) 69
, quick-acting 70
, shaper and planer 372–373
, solid box 68
, universal 71
Vise-clamps and mold for making lead clamps 72
Vise-jaws with detachable faces 71
Vises, hand and pin 71
, height of 50
, holding screws in 72–73
, milling-machine 420–421
parallel and parallel-swivel 69

Water-anneal 304
Weight of castings in relation to pattern 535
cubic inch of various metals 535
Work, protecting finished 106, 234–235
, pins for holding shaper and planer 373
Worm, cutting left-hand 287
Worm-wheel, construction of dividing 458
Worm-wheels 445

Yard, the, its value defined by Congress in metres 2
, the British Imperial 1
Yard-stick, composition of 1
superseded by National Prototype Metre 2

Zero position of cutter in milling gear-teeth 442
dial-pointer in milling gear-teeth 442